This international standard was developed in accordance with internationally recognized principles on standardization established in the Decision on Principles for the Development of International Standards, Guides and Recommendations issued by the World Trade Organization Technical Barriers to Trade (TBT) Committee.

Designation: E1165 – 20

Standard Test Method for Measurement of Focal Spots of Industrial X-Ray Tubes by Pinhole Imaging[1]

This standard is issued under the fixed designation E1165; the number immediately following the designation indicates the year of original adoption or, in the case of revision, the year of last revision. A number in parentheses indicates the year of last reapproval. A superscript epsilon (ε) indicates an editorial change since the last revision or reapproval.

1. Scope

1.1 The image quality and the resolution of X-ray images are especially sensitive to the characteristics of the focal spot. The imaging qualities of the focal spot are based on its two dimensional intensity distribution as seen from the detector plane.

1.2 This test method provides instructions for determining the effective size (dimensions) of standard and mini focal spots of industrial X-ray tubes for focal spot dimensions from 100 µm up to several mm of X-ray sources up to 600 kV tube voltage. Smaller focal spots down to 50 µm could be evaluated with less precision. This determination is based on the measurement of an image of a focal spot that has been radiographically recorded with a "pinhole" technique. An alternative method with a plaque hole IQI may be found in the Annex A, which covers the same focal spot sizes.

1.3 Smaller focal spots should be measured using Test Method E2903 using the projection of an edge.

1.4 This test method may also be used to determine the change in focal spot size that may have occurred due to tube age, tube overloading, and the like. This would entail the production of a focal spot radiograph (with the pinhole method) and an evaluation of the resultant image for pitting, cracking, and the like.

1.5 *Units*—Values stated in SI units are to be regarded as the standard.

1.6 *This standard does not purport to address all of the safety concerns, if any, associated with its use. It is the responsibility of the user of this standard to establish appropriate safety, health, and environmental practices and determine the applicability of regulatory limitations prior to use.*

1.7 *This international standard was developed in accordance with internationally recognized principles on standardization established in the Decision on Principles for the Development of International Standards, Guides and Recommendations issued by the World Trade Organization Technical Barriers to Trade (TBT) Committee.*

2. Referenced Documents

2.1 *ASTM Standards:*[2]

E691 Practice for Conducting an Interlaboratory Study to Determine the Precision of a Test Method

E999 Guide for Controlling the Quality of Industrial Radiographic Film Processing

E1000 Guide for Radioscopy

E1025 Practice for Design, Manufacture, and Material Grouping Classification of Hole-Type Image Quality Indicators (IQI) Used for Radiography

E1255 Practice for Radioscopy

E1742 Practice for Radiographic Examination

E1815 Test Method for Classification of Film Systems for Industrial Radiography

E2002 Practice for Determining Total Image Unsharpness and Basic Spatial Resolution in Radiography and Radioscopy

E2033 Practice for Radiographic Examination Using Computed Radiography (Photostimulable Luminescence Method)

E2339 Practice for Digital Imaging and Communication in Nondestructive Evaluation (DICONDE)

E2698 Practice for Radiographic Examination Using Digital Detector Arrays

E2736 Guide for Digital Detector Array Radiography

E2903 Test Method for Measurement of the Effective Focal Spot Size of Mini and Micro Focus X-ray Tubes

2.2 *European Standards:*[3]

EN 12543-2 Non-destructive testing—Characteristics of focal spots in industrial X-ray systems for use in non-destructive testing—Part 2: Pinhole camera radiographic method

[1] This test method is under the jurisdiction of ASTM Committee E07 on Nondestructive Testing and is the direct responsibility of Subcommittee E07.01 on Radiology (X and Gamma) Method.

Current edition approved Dec. 1, 2020. Published February 2021. Originally approved in 1987. Last previous edition approved in 2017 as E1165 – 12(2017). DOI: 10.1520/E1165-20.

[2] For referenced ASTM standards, visit the ASTM website, www.astm.org, or contact ASTM Customer Service at service@astm.org. For *Annual Book of ASTM Standards* volume information, refer to the standard's Document Summary page on the ASTM website.

[3] Available from European Committee for Standardization (CEN), Avenue Marnix 17, B-1000, Brussels, Belgium, http://www.cen.eu.

Copyright © ASTM International, 100 Barr Harbor Drive, PO Box C700, West Conshohocken, PA 19428-2959. United States

Documents
Document Sharing Hub
Full document details: ASTM E1165-20

EN 12543-5 Non-destructive testing—Characteristics of focal spots in industrial X-ray systems for use in non-destructive testing—Part 5: Measurement of the effective focal spot size of mini and micro focus X-ray tubes

3. Terminology

3.1 *Definitions of Terms Specific to This Standard:*

3.1.1 *actual focal spot, n*—the X-ray producing area of the target as viewed from a position perpendicular to the target surface (see Fig. 1).

3.1.2 *effective focal spot, n*—the X-ray producing area of the target as viewed by a detection device from a position perpendicular to the electron beam in the center of the resulting X-ray beam (see Fig. 1).

3.1.3 *effective size of focal spot, n*—focal spot size measured according to this test method.

4. Summary of Test Method

4.1 This test method is based on a projection image of the focal spot using a pinhole camera. This image shows the intensity distribution of the focal spot. From this image the effective size of the focal spot is calculated. Using digital tools, an integration of the profile across the pinhole image transforms the pinhole image into an edge response curve. The X- and Y-dimension of the edge unsharpness is used for calculation of the size of the focal spot. This method provides similar results as the method described in Test Method E2903 using an edge target instead of a pinhole camera. The measured effective spot sizes correspond to the geometrical image unsharpness values at given magnifications as measured with the Practice E2002 duplex wire gauge in practical images using equation:

$$U_G = \varphi(v - 1) \quad (1)$$

with geometrical unsharpness, U_G, focal spot size, φ, and magnification, v (see Guide E1000 for details of this equation). For a full description, see the WC-NDT 2012 paper cited in Footnote 4.[4]

4.2 Additionally, a simplified test method is described in Annex A for users of X-ray tubes who may not intend to use a pinhole camera. This alternative method is based on the edge method according toTest Method E2903 using a plate hole IQI as described in Practices E1025 or E1742 instead of a pinhole camera.

5. Significance and Use

5.1 One of the factors affecting the quality of radiologic images is the geometric unsharpness. The degree of geometric unsharpness is dependent on the focal spot size of the radiation source, the distance between the source and the object to be radiographed, and the distance between the object to be radiographed and the detector (imaging plate, Digital Detector Array (DDA) or film). This test method allows the user to determine the effective focal size of the X-ray source. This result may then be used to establish source to object and object to detector distances appropriate for maintaining the desired degree of geometric unsharpness or maximum magnification for a given radiographic imaging application, or both. Some ASTM standards require this value for calculation of a required magnification, for example, Practices E1255, E2033, and E2698.

[4] Klaus Bavendiek, Uwe Heike, Uwe Zscherpel, Uwe Ewert, and Adrian Riedo. "New measurement methods of focal spot size and shape of X-ray tubes in digital radiological applications in comparison to current standards," WC-NDT 2012, Durban, South Africa, http://www.x-ray-forum.de/WCNDT_Paper346_WE_MR21_A_BavendiekEtAl.pdf.

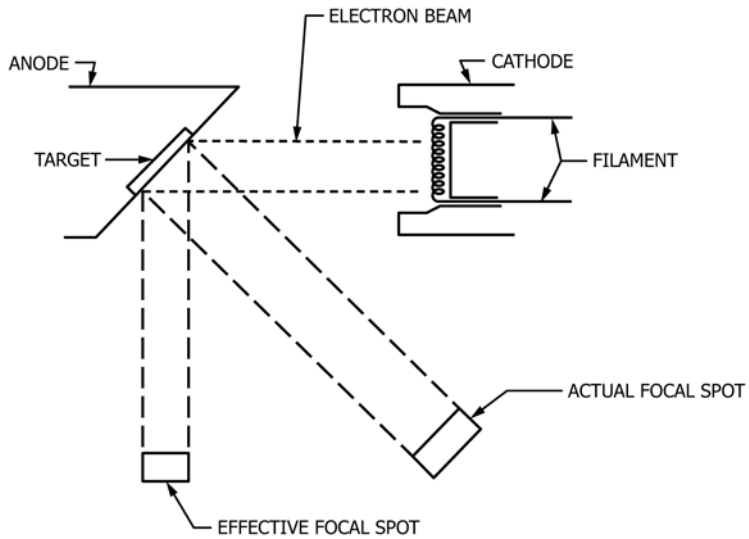

FIG. 1 Actual/Effective Focal Spot

Documents
Document Sharing Hub
Full document details: ASTM E1165-20

6. Apparatus

6.1 *Pinhole Diaphragm*—The pinhole diaphragm shall conform to the design and material requirements of Table 1 and Fig. 2.

6.2 *Camera*—The pinhole camera assembly consists of the pinhole diaphragm, the shielding material to which it is affixed, and any mechanism that is used to hold the shield/diaphragm in position (jigs, fixtures, brackets, and the like). It is highly recommended to shield the beam between focal spot and pinhole and between pinhole and detector to avoid a high level of scatter signal at the detector. A scatter protection of high absorbing material within the camera is also recommended. The accuracy of the pinhole system is especially sensitive to the relative distances between (and alignment of) the focal spot, the pinhole, and the detector. Accordingly, a specially designed apparatus may be necessary in order to assure compliance with the requirements of this standard. Fig. 3 provides an example of a special collimator that can be used to ensure conformance with ±1° alignment tolerance. Fig. 4 shows the collimator in the system and additionally the shielding and scatter protection.

6.3 *Alignment and Position of the Pinhole Camera*—The angle between the beam direction and the pinhole axis (see Fig. 5) shall be smaller than ±1.5°. When deviating from Fig. 5, the direction of the beam shall be indicated. The incident face of the pinhole diaphragm shall be placed at a distance, *m*, from the focal spot so that the variation of *m* over the extension of the actual focal spot does not exceed ±5 % in the beam direction. In no case shall this distance be less than 100 mm.

6.4 *Position of the Radiographic Image Detector*—The radiographic image detector (film, imaging plate or DDA) shall be placed normal to the beam direction at a distance, *n*, from the incident face of the pinhole diaphragm determined from the applicable geometry according to Fig. 6(a), Fig. 6(b), and Fig. 7.

6.5 *Radiographic Image Detector*—Analogue or digital radiographic image detectors may be used, provided sensitivity, dynamic range and detector unsharpness allow capturing of the full spatial size of the focal spot image without detector saturation. The maximum allowed basic spatial resolution ($SR_b^{detector}$) of the detector is determined from the pinhole diameter, P, and the factor *n/m* (see Fig. 6(a)).

$$SR_b^{detector} \leq \frac{P}{2} \cdot \left(1 + \frac{n}{m}\right) \quad (2)$$

TABLE 1 Pinhole Diaphragm Design Requirements (Dimension)[A]

NOTE 1—The pinhole diaphragm shall be made from one of the following materials: *(1)* An alloy of 90 % gold and 10 % platinum, *(2)* Tungsten, *(3)* Tungsten carbide, *(4)* Tungsten alloy, *(5)* Platinum and 10 % Iridium Alloy, or *(6)* Tantalum.

Diameter P [µm]	Height H [µm]
10 ± 5	20 ± 5
30 ± 5	75 ± 10
100 ± 5	500 ± 10

[A] See Fig. 2.

6.5.1 The detector basic spatial resolution, $SR_b^{detector}$, shall be taken from the vendor's data sheet or determined with the duplex wire IQI according to Practice E2002. The minimum projected length and width of the focal spot image should be covered always by at least 20 detector pixels in digital images. The maximum value for $SR_b^{detector}$ in Fig. 7, column 7 is the smaller value of both requirements in formula (2) and 20 detector pixels covering the focal spot.

6.5.2 The signal-to-noise ratio of the focal spot image (ratio of the maximum intensity value inside the focal spot and the standard deviation of the background signal outside) should be at least 50. The maximum intensity inside the focal spot should be above 30 %, but lower than 90 % of the maximum linear detector output value. The gray scale resolution of the detector shall be in minimum 12 bit. The maximum background signal should be less than 15 % of the maximum intensity value of the image; if this could not be achieved, a scatter protection between pinhole and detector shall be applied (see Fig. 4).

6.5.3 Imaging plate systems (Computed Radiography, CR) or digital detector arrays (DDA) may be used as digital image detectors following Practices E2033 or E2698. The pixel values shall be linear to the dose.

6.5.4 If radiographic film is used as image detector, it shall meet the requirements of Test Method E1815 film system class I or Special and shall be packed in low absorption cassettes using no screens. The film shall be exposed to a maximum optical density between 1.5 and 2.5. The film shall be digitized with a maximum pixel of 50 µm or a smaller size, which fulfills the requirements of Fig. 7. If the user has no digital equipment, the film may be evaluated visually; the procedure is shown in 7.9. The film shall be processed in accordance with Guide E999.

6.6 *Image Processing Equipment*—This apparatus is used to capture the images and to measure the intensity profile of the focal spot in the projected image. The image shall be a positive image (more dose shows higher grey values) and linear proportional to the dose. The equipment shall be able:

(1) To calibrate the pixel size with a precision of 2 µm or 1 % of the pixel size,

(2) To draw line profiles and average the line profiles over a preset area,

(3) To integrate line profiles by the length of the line profile,

(4) To subtract the background using a linear interpolation (straight line) of both ends of the line profile using at least the average of 10 % of the line profile as support on both ends, and

(5) To calculate the X- and Y-dimension of the focal spot in the image with two threshold values of 16 % and 84 % of the integrated line profile and extrapolate the width to 100 % (see Fig. 8).

NOTE 1—A software that fulfills the requirements of 6.6 can be downloaded from http://www.zscherpel.info/ic/.

6.6.1 When using CR technology or digitized film where outlier pixel may occur, a median 3×3 filter shall be available.

7. Procedure

7.1 If possible, the geometry shown in Fig. 7 shall be used for all exposures. If the machine geometry or accessibility

AVA Documents Document Sharing Hub

Full document details: ASTM E1165-20

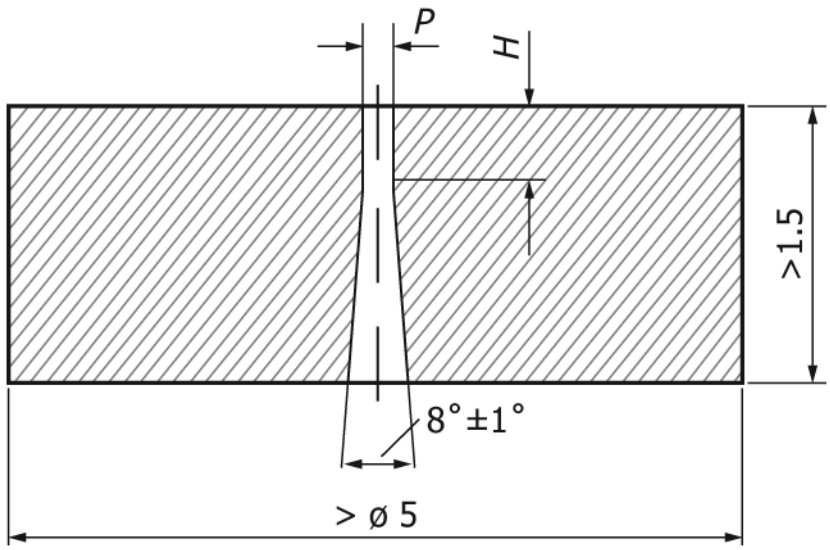

FIG. 2 Essential Dimensions of the Pinhole Diaphragm

limitations will not permit the use of the geometry in Fig. 7, use the maximum attainable FDD (in these instances adjust the relative distances between focal spot, pinhole, and detector accordingly to suit the image enlargement factors specified in Fig. 7). The distance between the focal spot and the pinhole is based on the anticipated size of the focal spot being measured and the desired degree of image enlargement (see Fig. 4). The specified focal spot to pinhole distance (*m*) for the different focal spot size ranges is provided in Fig. 7. Position the pinhole such that it is within ±1.5° of the central axis of the X-ray beam (see 6.2).

7.2 Position the detector as illustrated in Fig. 4. When using film as detector, the exposure identification appearing on the film (by radiographic imaging) should be X-ray machine identity (make and serial number), organization making the radiograph, energy (kV), tube current (mA) and date of exposure. When the film is digitized or a digital detector is used, this information shall be stored within the image or file name.

7.3 Adjust the kilovoltage settings on the X-ray machine to 75 % of the nominal tube voltage, but not more than 200 kV for evaluation with film. For evaluation with a DDA or CR, the maximum voltage is limited by the condition that the background intensity is lower than 15 % of the maximum intensity inside the focal spot. The X-ray tube current shall be the maximum applicable tube current at the selected voltage. For measurements with more than 200 kV when using CR or film, an optional copper prefilter may be used to prevent saturation of the imaging device.

7.4 Expose the detector as given in 6.5. When using CR or film, the maximum pixel value or density shall be controlled by exposure time only. With a DDA the internal detector settings (frame time or sensitivity, or both) shall be selected that the conditions of 6.5 are met.

NOTE 2—The required SNR can be achieved with a DDA system by integration of frames with identical exposures in the computer. For details, refer to Guide E2736.

7.5 Before evaluation, the image shall be inspected for spikes or outliers. These artifacts shall be removed using a median or despeckle 3×3 filter. When a median filter is used, the size of the focal spot in the image shall be more than 40 pixels in both directions. For this case, column #8 of Fig. 7 shows the requirements to $SR_b^{detector}$.

7.6 The images shall be stored with the nomenclature of 7.2 in 16 Bit lossless Image Format, for example, TIFF or Digital Imaging and Communication in Nondestructive Evaluation (DICONDE); see Practice E2339.

7.7 The pixel size in the image shall be calibrated by a known object size in the image like a "ruler" or by measured geometry of the camera with the precision of 1 % of the anticipated focal spot size.

7.8 *Focal Spot Measurement using Integrated Line Profiles (ILP):*

7.8.1 A line profile shall be drawn in length or width direction through the maximum intensity of the focal spot. The line profile shall be accumulated perpendicular to the profile direction over about 3 times the anticipated focal spot size (see Fig. 8). The line profile should have a length of at least 3 times the anticipated focal spot size. The background shall be subtracted using a linear interpolation (straight line) of both ends of the line profile, using at least the average of 10 % of the line profile as support on both ends. When using the 10 µm pinhole a penetration of the pinhole itself could occur creating a trapezoid-plateau in the image with gradients on both sides (see Fig. 9); this plateau should be removed using an iterative background subtraction or the measurement shall be limited to the flat plateau range as indicated in Fig. 9.

7.8.1.1 Now the line profile shall be integrated (accumulated). Then the points on the resulting curve at which the curve has 16 % and 84 % of its max value shall be determined (see Klasens method of Guide E1000, and Fig. 16 in Guide E1000). The distance between these points is extrapolated to the theoretical 0 % and 100 % values of the total focal spot

AVA Documents
Document Sharing Hub

Full document details: ASTM E1165-20

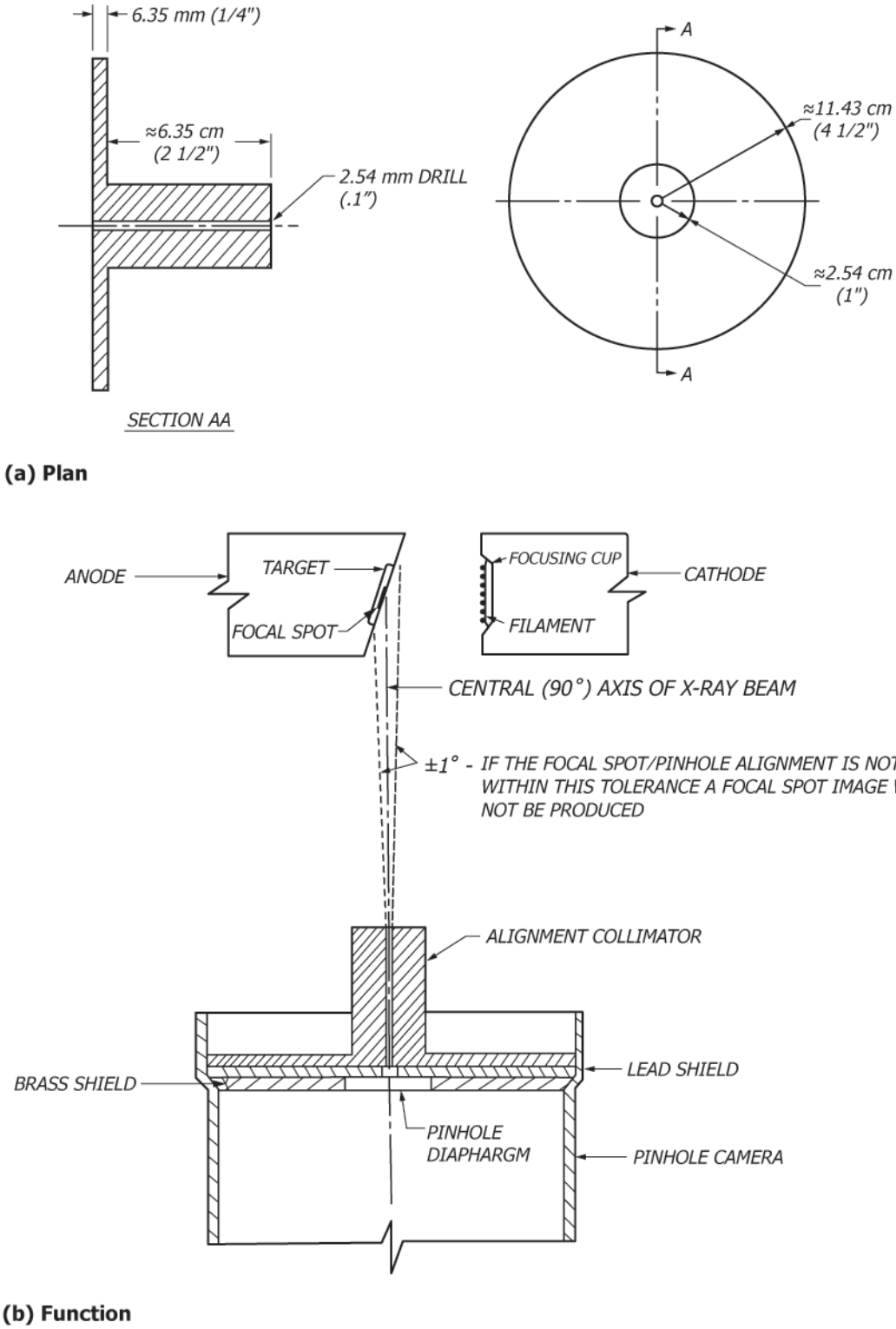

FIG. 3 Pinhole and Alignment Collimator Schematic

intensity by a multiplication with 1.47. The result is the size of the focal spot in the direction of the integrated line profile.

NOTE 3—By using the values of 16 % and 84 %, instead of 0 % and 100 %, the determined size is 32 % too small. The factor 1.47 = 100/(100–32) extrapolates this to 100 %.

7.8.2 This measurement shall be done in two directions (see Fig. 8 and Fig. 4):

7.8.2.1 *Direction X*—Vertical to the electron beam direction (width).

Documents
Document Sharing Hub

Full document details: ASTM E1165-20

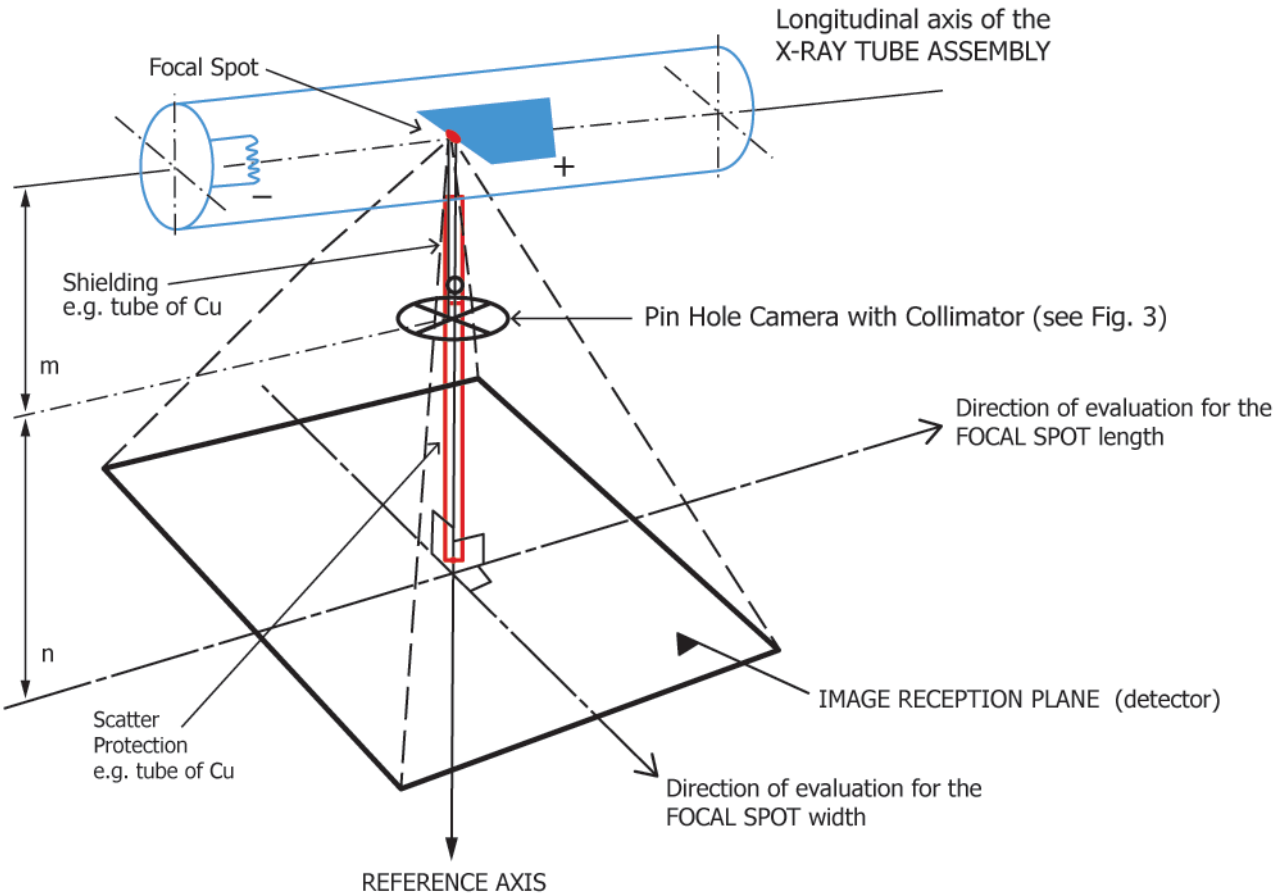

FIG. 4 Exposure Set-Up Schematic and Focal Spot WIDTH (X) and LENGTH (Y) Specification

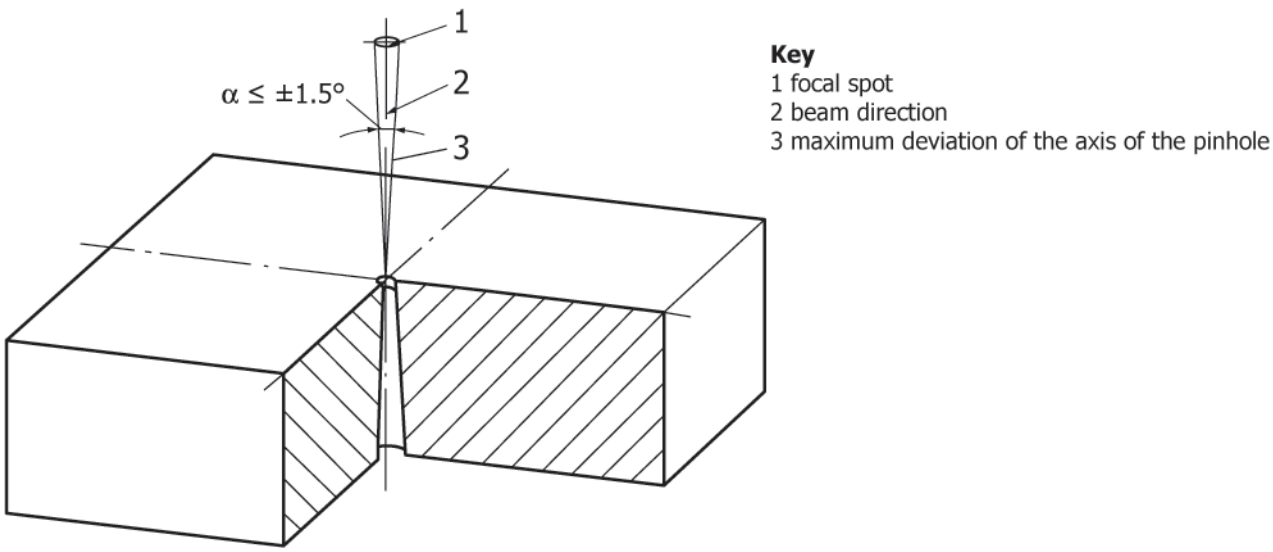

FIG. 5 Alignment of the Pinhole Diaphragm

7.8.2.2 *Direction Y*—Parallel to the electron beam direction (length).

7.8.2.3 If available, an automatic software system which could perform the functionality of 7.8.1 and 7.8.2 within one step may be used.

7.9 *Focal Spot Evaluation for Users Without Digital Equipment:*

7.9.1 If radiographic film is used as an image detector and it cannot be digitized, it shall be evaluated visually using an illuminator with a uniform luminance of 2000 to 3000 cd/m^2.

Documents
Document Sharing Hub

Full document details: ASTM E1165-20