This international standard was developed in accordance with internationally recognized principles on standardization established in the Decision on Principles for the Development of International Standards, Guides and Recommendations issued by the World Trade Organization Technical Barriers to Trade (TBT) Committee.

Designation: E1268 – 19

Standard Practice for Assessing the Degree of Banding or Orientation of Microstructures[1]

This standard is issued under the fixed designation E1268; the number immediately following the designation indicates the year of original adoption or, in the case of revision, the year of last revision. A number in parentheses indicates the year of last reapproval. A superscript epsilon (ε) indicates an editorial change since the last revision or reapproval.

INTRODUCTION

Segregation occurs during the dendritic solidification of metals and alloys and is aligned by subsequent deformation. Solid-state transformations may be influenced by the resulting microsegregation pattern leading to development of a layered or banded microstructure. The most common example of banding is the layered ferrite-pearlite structure of wrought low-carbon and low-carbon alloy steels. Other examples of banding include carbide banding in hypereutectoid tool steels and martensite banding in heat-treated alloy steels. This practice covers procedures to describe the appearance of banded structures, procedures for characterizing the extent of banding, and a microindentation hardness procedure for determining the difference in hardness between bands in heat treated specimens. The stereological methods may also be used to characterize non-banded microstructures with second phase constituents oriented (elongated) in varying degrees in the deformation direction.

1. Scope

1.1 This practice describes a procedure to qualitatively describe the nature of banded or oriented microstructures based on the morphological appearance of the microstructure.

1.2 This practice describes stereological procedures for quantitative measurement of the degree of microstructural banding or orientation.

NOTE 1—Although stereological measurement methods are used to assess the degree of banding or alignment, the measurements are only made on planes parallel to the deformation direction (that is, a longitudinal plane) and the three-dimensional characteristics of the banding or alignment are not evaluated.

1.3 This practice describes a microindentation hardness test procedure for assessing the magnitude of the hardness differences present in banded heat-treated steels. For fully martensitic carbon and alloy steels (0.10–0.65 %C), in the as-quenched condition, the carbon content of the matrix and segregate may be estimated from the microindentation hardness values.

1.4 This practice does not cover chemical analytical methods for evaluating banded structures.

1.5 This practice deals only with the recommended test methods and nothing in it should be construed as defining or establishing limits of acceptability.

1.6 The measured values are stated in SI units, which are regarded as standard. Equivalent inch-pound values, when listed, are in parentheses and may be approximate.

1.7 *This standard does not purport to address all of the safety concerns, if any, associated with its use. It is the responsibility of the user of this standard to establish appropriate safety, health, and environmental practices and determine the applicability of regulatory limitations prior to use.*

1.8 *This international standard was developed in accordance with internationally recognized principles on standardization established in the Decision on Principles for the Development of International Standards, Guides and Recommendations issued by the World Trade Organization Technical Barriers to Trade (TBT) Committee.*

2. Referenced Documents

2.1 *ASTM Standards:*[2]

A370 Test Methods and Definitions for Mechanical Testing of Steel Products

E3 Guide for Preparation of Metallographic Specimens

[1] This practice is under the jurisdiction of ASTM Committee E04 on Metallography and is the direct responsibility of Subcommittee E04.14 on Quantitative Metallography.

Current edition approved June 1, 2019. Published July 2019. Originally approved in 1988. Last previous edition approved in 2018 as E1268 – 18. DOI: 10.1520/E1268-19

[2] For referenced ASTM standards, visit the ASTM website, www.astm.org, or contact ASTM Customer Service at service@astm.org. For *Annual Book of ASTM Standards* volume information, refer to the standard's Document Summary page on the ASTM website.

Copyright © ASTM International, 100 Barr Harbor Drive, PO Box C700, West Conshohocken, PA 19428-2959. United States

Documents
Document Sharing Hub
Full document details: ASTM E1268-19

E7 Terminology Relating to Metallography
E140 Hardness Conversion Tables for Metals Relationship Among Brinell Hardness, Vickers Hardness, Rockwell Hardness, Superficial Hardness, Knoop Hardness, Scleroscope Hardness, and Leeb Hardness
E384 Test Method for Microindentation Hardness of Materials
E407 Practice for Microetching Metals and Alloys
E562 Test Method for Determining Volume Fraction by Systematic Manual Point Count
E883 Guide for Reflected–Light Photomicrography

3. Terminology

3.1 *Definitions*—For definitions of terms used in this practice, see Terminology E7.

3.2 *Definitions of Terms Specific to This Standard:*

3.2.1 *banded microstructure*—separation, of one or more phases or constituents in a two-phase or multiphase microstructure, or of segregated regions in a single phase or constituent microstructure, into distinct layers parallel to the deformation axis due to elongation of microsegregation; other factors may also influence band formation, for example, the hot working finishing temperature, the degree of hot- or cold-work reduction, or split transformations due to limited hardenability or insufficient quench rate.

3.2.2 *feature interceptions*—the number of particles (or clusters of particles) of a phase or constituent of interest that are crossed by the lines of a test grid. (see Fig. 1).

3.2.3 *feature intersections*—the number of boundaries between the matrix phase and the phase or constituent of interest that are crossed by the lines of a test grid (see Fig. 1). For isolated particles in a matrix, the number of feature intersections will equal twice the number of feature interceptions.

3.2.4 *oriented constituents*—one or more second-phases (constituents) elongated in a non-banded (that is, random distribution) manner parallel to the deformation axis; the degree of elongation varies with the size and deformability of the phase or constituent and the degree of hot- or cold-work reduction.

3.2.5 *stereological methods*—procedures used to characterize three-dimensional microstructural features based on measurements made on two-dimensional sectioning planes.

NOTE 2—Microstructural examples are presented in Annex A1 that illustrate a quantitative method to assess the degree of banding (BR)[3,4]. The degree of banding varies: BR<1.3 - no banding; BR >1.9 - one or two solid bands across the whole field of view and several broken bands; BR>2.6 - several solid bands intersecting the whole field of view; BR>4 and BR>5 - uniform and non-uniform solid bands alternately intersecting the whole field of view. Fig. 2 describes this classification using a qualitative description of the nature and extent of the banding or orientation of microstructures.

3.3 *Symbols:*

$N_{\perp}$ = number of feature interceptions with test lines perpendicular to the deformation direction.

$N_{\parallel}$ = number of feature interceptions with test lines parallel to the deformation direction.

$P_{\perp}$ = number of feature boundary intersections with test lines perpendicular to the deformation direction.

$P_{\parallel}$ = number of feature boundary intersections with test lines parallel to the deformation direction.

$L_{\parallel}$ = summarized length of feature interceptions by a single test line, parallel to the deformation direction (mm).

$L_{\perp}$ = summarized length of feature interceptions by a single test line, perpendicular to the deformation direction (mm).

M = magnification.

L_t = true test line length in mm, that is, the test line length divided by M.

$N_{L\perp}$ = $\frac{N_{\perp}}{L_t}$

$N_{L\parallel}$ = $\frac{N_{\parallel}}{L_t}$

$P_{L\perp}$ = $\frac{P_{\perp}}{L_t} \cong 2N_{L\perp}$

$P_{L\parallel}$ = $\frac{P_{\parallel}}{L_t} \cong 2N_{L\parallel}$

$L_{L\parallel}$ = linear fraction of a feature on a single test line parallel to the deformation direction

$L_{L\perp}$ = linear fraction of a feature on a single test line perpendicular to the deformation direction

$L_{L\parallel}$ = $\frac{L_{\parallel}}{L_t}$

$L_{L\perp}$ = $\frac{L_{\perp}}{L_t}$

[3] Kazakov A., Kiselev D., Andreeva S., Chigintsev L., Golovin S., Egorov V., and Markov S., "Development of a procedure for the quantitative estimation of microstructural banding of low-alloyed pipeline steels using an automatic image analyzer ," *Chernye metally*, 2007, No. 7-8, pp. 31-37.

[4] Kazakov, A., Kiselev, D., Kazakova, E., Vander Voort, G. F., and Chigintsev, L., "Quantitative Description of Microstructural Banding in Steels," *Materials Performance and Characterization*, Vol. 6, No. 3, 2017, pp. 224-236, https://doi.org/10.1520/MPC20160009.

Documents
Document Sharing Hub
Full document details: ASTM E1268-19

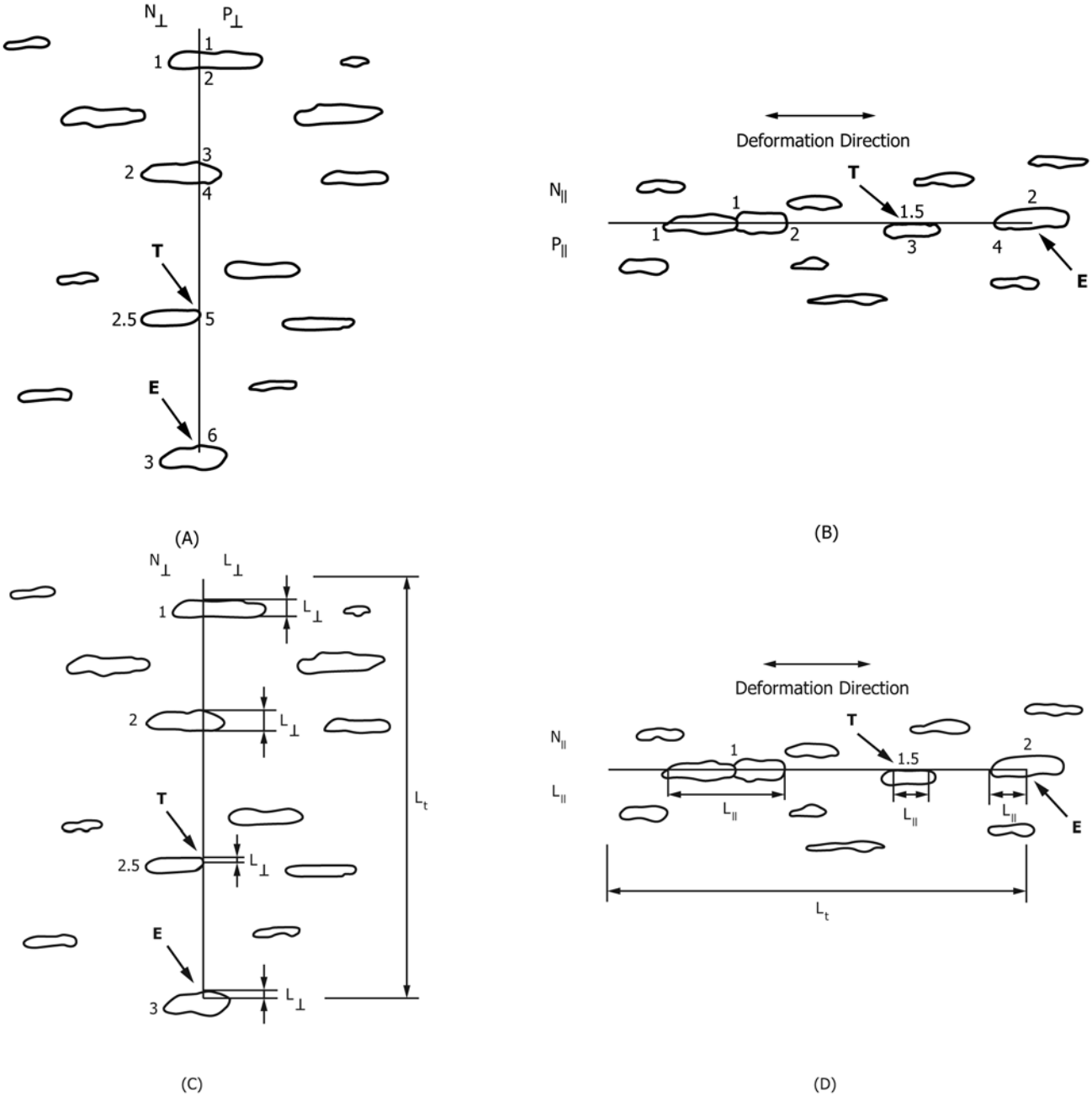

NOTE 1—The test grid lines have been shown oriented perpendicular (A, C) to the deformation axis and parallel (B, D) to the deformation axis. The counts for $N_{\perp}$, $N_{\parallel}$, $P_{\perp}$, $P_{\parallel}$, $L_{\perp}$, and $L_{\parallel}$ are shown for counts made from top to bottom (A, C) or from left to right (B, D).

NOTE 2—*T* indicates a tangent hit and *E* indicates that the grid line ended within the particle; both situations are handled as shown.

NOTE 3—L_t indicates full length of a test grid line.

FIG. 1 Illustration of the Counting of Particle Interceptions (N) and Boundary Intersections (P) for an Oriented Microstructure

Documents
Document Sharing Hub

Full document details: ASTM E1268-19

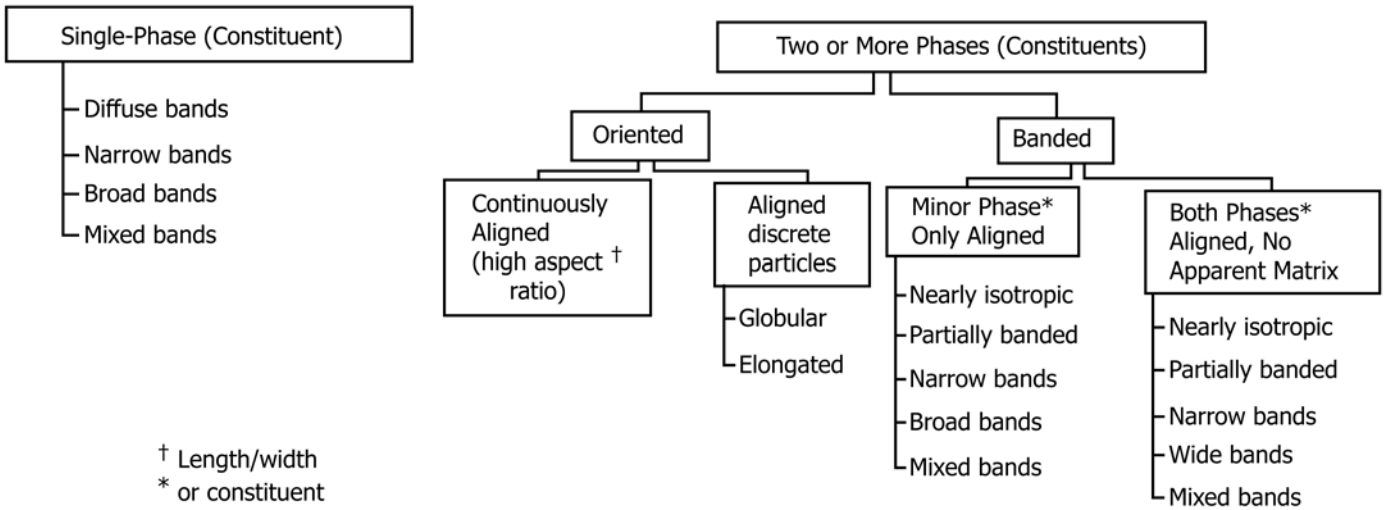

FIG. 2 Qualitative Classification Scheme for Oriented or Banded Microstructures

n = number of measurement fields or number of microindentation impressions.

m = number of the test lines parallel to the deformation direction

k = number of the test lines perpendicular to the deformation direction

$$\bar{N}_{L\perp} = \frac{\sum N_{L\perp}}{n}$$

$$\bar{N}_{L\parallel} = \frac{\sum N_{L\parallel}}{n}$$

$$\bar{P}_{L\perp} = \frac{\sum P_{L\perp}}{n} \cong 2\bar{N}_{L\perp}$$

$$\bar{P}_{L\parallel} = \frac{\sum P_{L\parallel}}{n} \cong 2\bar{N}_{L\parallel}$$

$$\overline{L_{L\parallel}} = \frac{\sum L_{L\parallel}}{m}$$

$$\overline{L_{L\perp}} = \frac{\sum L_{L\perp}}{k}$$

AI = anisotropy index.

$$AI = \frac{N_{L\perp}}{N_{L\parallel}}$$

$$\overline{AI} = \frac{\Sigma AI}{n}$$

$SB_{\perp}$ = mean center-to-center spacing of the bands.

$$SB_{\perp} = \frac{1}{\bar{N}_{L\perp}}.$$

V_V = volume fraction of the banded phase (constituent).

$\lambda_{\perp}$ = mean edge-to-edge spacing of the bands, mean free path (distance).

$$\lambda_{\perp} = \frac{1 - V_V}{\bar{N}_{L\perp}}$$

Ω_{12} = degree of orientation of partially oriented linear structure elements on the two-dimensional plane-of-polish.

$$\Omega_{12} = \frac{\bar{N}_{L\perp} - \bar{N}_{L\parallel}}{\bar{N}_{L\perp} + 0.571\,\bar{N}_{L\parallel}}$$

$$\Omega_{12} = \frac{\bar{P}_{L\perp} - \bar{P}_{L\parallel}}{\bar{P}_{L\perp} + 0.571\,\bar{P}_{L\parallel}}$$

$\sigma_{L_{L\parallel}}$ = standard deviation of linear fraction of a feature for all test lines that are parallel to the deformation direction on a single field of view

$$\sigma_{L_{L\parallel}} = \sqrt{\frac{\sum_{i=1}^{m}\left(L_{L\parallel_i} - \overline{L_{L\parallel}}\right)^2}{m-1}}$$

Documents
Document Sharing Hub

Full document details: ASTM E1268-19

$\sigma_{L_{L\perp}}$ = standard deviation of linear fraction of a feature for all test lines that are perpendicular to the deformation direction on a single field of view

$$\sigma_{L_{L\perp}} = \sqrt{\frac{\sum_{i=1}^{k}\left(L_{L\perp_i} - \overline{L_{L\perp}}\right)^2}{k-1}}$$

BR = banding rate in a single field of view

$$BR = \frac{\sigma_{L_{L\parallel}}}{\sigma_{L_{L\perp}}}$$

$$\overline{BR} = \frac{\Sigma BR}{n}$$

$\bar{X}$ = mean values ($\bar{N}_{L\perp}$, $\bar{N}_{L\parallel}$, $\bar{P}_{L\perp}$, $\bar{P}_{L\parallel}$, $\overline{AI}$,$\overline{BR}$)

s = estimate of standard deviation (σ).

t = a multiplier related to the number of fields examined and used in conjunction with the standard deviation of the measurements to determine the 95 % CI.

95 % CI = 95 % confidence interval.

$$95\ \%\ CI = \pm\frac{ts}{\sqrt{n}}$$

% RA = % relative accuracy.

$$\%\ RA = \frac{95\ \%\ CI}{\bar{X}} \times 100$$

4. Summary of Practice

4.1 The degree of microstructural banding or orientation is described quantitatively using metallographic specimens aligned parallel to the deformation direction of the product.

4.2 Stereological methods are used to measure the number of bands per unit length, the inter-band or interparticle spacing and the degree of anisotropy or orientation.

4.3 Microindentation hardness testing is used to determine the hardness of each type band present in hardened specimens and the difference in hardness between the band types.

5. Significance and Use

5.1 This practice is used to assess the nature and extent of banding or orientation of microstructures of metals and other materials where deformation and processing produce a banded or oriented condition.

5.2 Banded or oriented microstructures can arise in single phase, two phase or multiphase metals and materials. The appearance of the orientation or banding is influenced by processing factors such as the solidification rate, the extent of segregation, the degree of hot or cold working, the nature of the deformation process used, the heat treatments, and so forth.

5.3 Microstructural banding or orientation influence the uniformity of mechanical properties determined in various test directions with respect to the deformation direction.

5.4 The stereological methods can be applied to measure the nature and extent of microstructural banding or orientation for any metal or material. The microindentation hardness test procedure should only be used to determine the difference in hardness in banded heat-treated metals, chiefly steels.

5.5 Isolated segregation may also be present in an otherwise reasonably homogeneous microstructure. Stereological methods are not suitable for measuring individual features, instead use standard measurement procedures to define the feature size. The microindentation hardness method may be used for such structures.

5.6 Results from these test methods may be used to qualify material for shipment in accordance with guidelines agreed upon between purchaser and manufacturer, for comparison of different manufacturing processes or process variations, or to provide data for structure-property-behavior studies.

6. Apparatus

6.1 A metallurgical (reflected-light) microscope is used to examine the microstructure of test specimens. Banding or orientation is best observed using low magnifications, for example, 50× to 200×.

6.2 Stereological measurements are made by superimposing a test grid (consisting of a number of closely spaced parallel lines of known length) on the projected image of the microstructure or on a photomicrograph. Measurements are made with the test lines parallel and perpendicular to the deformation direction. The total length of the grid lines should be at least 500 mm.

6.3 These stereological measurements may be made using a semiautomatic tracing type image analyzer. The test grid is placed over the image projected onto the digitizing tablet and a cursor is used for counting.

6.4 For certain microstructures where the contrast between the banded or oriented constituents is adequate, an automatic image analyzer may be used for counting, where the pixel lines of the bitmap images, generated by high resolution digital cameras, are used rather than the grid lines of the plastic overlay or reticle.

6.5 A microindentation hardness tester is used to determine the hardness of each type of band in heat-treated steels or other metals. The Knoop indenter is particularly well suited for this work.

7. Sampling and Test Specimens

7.1 In general, specimens should be taken from the final product form after all processing steps have been performed, particularly those that would influence the nature and extent of banding. Because the degree of banding or orientation may vary through the product cross section, the test plane should sample the entire cross section. If the section size is too large to permit full cross sectioning, samples should be taken at standard locations, for example, subsurface, mid-radius or

AVA Documents
Document Sharing Hub

Full document details: ASTM E1268-19

quarter-point), and center, or at specific locations based upon producer-purchaser agreements.

7.2 The degree of banding or orientation present is determined using longitudinal test specimens, that is, specimens where the plane of polish is parallel to the deformation direction. For plate or sheet products, a planar oriented (that is, polished surface parallel to the surface of the plate or sheet) test specimen, at subsurface, mid-thickness, or center locations, may also be prepared and tested depending on the nature of the product application.

7.3 Banding or orientation may also be assessed on intermediate product forms, such as billets or bars, for material qualification or quality control purposes. These test results, however, may not correlate directly with test results on final product forms. Test specimens should be prepared as described in 7.1 and 7.2 but with the added requirement of choosing test locations with respect to ingot or continuously cast slab/strand locations. The number and location of such test specimens should be defined by producer-purchaser agreement.

7.4 Individual metallographic test specimens should have a polished surface area covering the entire cross section if possible. The length of full cross-section samples, in the deformation direction, should be at least 10 mm (0.4 in.). If the product form is too large to permit preparation of full cross sections, the samples prepared at the desired locations should have a minimum polished surface area of 100 mm^2 (0.16 $in.^2$) with the sample length in the longitudinal direction at least 10 mm (0.4 in.).

8. Specimen Preparation

8.1 Metallographic specimen preparation should be performed in accordance with the guidelines and recommended practices given in Methods E3. The preparation procedure must reveal the microstructure without excessive influence from preparation-induced deformation or smearing.

8.2 Mounting of specimens may be performed depending on the nature of the test sample or if needed to accommodate automatic polishing devices.

8.3 The microstructure should be revealed in strong contrast by any appropriate chemical or electrolytic etching method, by tinting or staining, etc. Test Methods E407 list appropriate etchants for most metals and alloys. For certain materials, etching may not be necessary as the naturally occurring reflectivity differences between the constituents may produce adequate contrast.

9. Calibration

9.1 Use a stage micrometer to determine the magnification of the projected image or at the photographic plane.

9.2 Use a ruler to determine the length of the test lines on the grid overlay in mm.

10. Procedure

10.1 Place the polished and etched specimen on the microscope stage, select a suitable low magnification, for example, 50× or 100×, and examine the microstructure. Align the specimen so that the deformation direction is horizontal on the projection screen. Randomly select the initial field by arbitrarily moving the stage and accepting the new field without further stage adjustment.

10.1.1 Bright field illumination will be used for most measurements. However, depending on the alloy or material being examined, other illumination modes, such as polarized light or differential interference contrast illumination, may be used.

10.1.2 Measurements may also be made by placing the test grid on photomicrographs (see Guide E883), taken of randomly selected fields, at suitable magnifications.

10.2 Qualitatively define the nature and extent of the banding or orientation present in accordance with the following guidelines. Examination at higher magnification may be required to identify and classify the constituents present. Fig. 2 describes the classification approach.

10.2.1 Determine if the banding or orientation present represents variations in the etch intensity of a single phase or constituent, such as might result from segregation in a tempered martensite alloy steel specimen, or is due to preferential alignment of one or more phases or constituents in a two-phase or multi-phase specimen.

10.2.2 For orientation or banding in a two-phase or multiphase specimen, determine if only the minor phase or constituent is preferentially aligned within the matrix phase. Alternatively, both phases may be aligned with neither appearing as a matrix phase.

10.2.3 For two-phase (constituent) or multiphase (constituent) microstructures, determine if the aligned second phase (constituent) is banded in a layered manner or exists in an oriented, non-banded, randomly distributed manner.

10.2.4 For cases where a second phase or constituent is banded or oriented within a non-banded, nonoriented matrix, determine if the banded or oriented constituent exists as discrete particles (the particles may be globular or elongated) or as a continuously aligned constituent.

10.2.5 Describe the appearance of the distribution of the second phase (or, either lighter or darker etching regions within a single phase microstructure) in terms of the pattern present, for example: isotropic (non-oriented or non-banded), nearly isotropic, partially banded, partially oriented, diffusely banded, narrow bands, broad bands, mixed narrow and broad bands, fully oriented, etc.

10.3 Place the grid lines over the projected image or photomicrograph of the randomly selected field so that the grid lines are perpendicular to the deformation direction. The grid should be placed without operator bias. Decide which phase or constituent is banded. If both phases or constituents are banded, with no obvious matrix phase, choose one of the phases (constituents) for counting. Generally, it is best to count the banded phase present in least amount. Either N_L or P_L, or both (see 10.3.1 – 10.3.4 for definitions), may be measured, using grid orientations perpendicular (⊥) and parallel (||) to the deformation direction, depending on the purpose of the measurements or as required by other specifications.

10.3.1 *Measurement of* $N_{L\perp}$—with the test grid perpendicular to the deformation direction, count the number of intersec-

AVA Documents
Document Sharing Hub

Full document details: ASTM E1268-19

TABLE 1 Rules for N and P Counts

NOTE 1—Fig. 1 illustrates some of these counting rules.

1.	*N Interceptions*—Count the number of individual particles, grains, or patches of the constituent of interest crossed by the grid lines.
2.	*P Intersections*—Count the number of unlike phase boundaries or constituent boundaries[A] crossed by the grid lines.
3.	If two or more contiguous particles, grains, or patches of the phase or constituent of interest are crossed by the grid lines (none of the other phase or constituent between the particles where crossed) count them as one particle intercepted ($N = 1$). For *P* intersections, do not count phase or constituent boundaries between like particles, grains, etc. This problem occurs most commonly in $N_{L\|}$ and $P_{L\|}$ measurements in highly banded structures.
4.	When a test line is tangent to the particle, grain, or patch of interest, *N* is counted as ½ and *P* as 1.
5.	If a test line ends within a particle, count *N* as ½ and *P* as 1.
6.	If the entire test line lies completely within the phase or feature of interest (this can occur for parallel counts of a highly banded material), count *N* as ½ and *P* as 0.

[A]If possible, etch the specimens so that like phase or constituent boundaries are not revealed, only unlike boundaries.

particles or features intercepted by the test lines. For a two-phase structure, count all of the interceptions of the phase of interest, that is, those that are clearly part of the bands and those that are not. When two or more contiguous particles, grains, or patches of the phase or constituent of interest are crossed by the grid line, that is, none of the other phase or constituent is present between the like particles, grains, or patches, count them as one interception ($N = 1$). Tangent hits are counted as one half an interception. If a line ends within a particle, patch or grain, count it as one half an interception. Table 1 provides rules for counting while Fig. 1 illustrates the counting procedure. Calculate the number of feature interceptions per unit length perpendicular to the deformation axis, $N_{L\perp}$, in accordance with:

$$N_{L\perp} = \frac{N_{\perp}}{L_t} \tag{1}$$

where:

$N_{\perp}$ = number of interceptions and
L_t = true test line length in mm, that is, the length of the grid lines in mm divided by the magnification, *M*.

10.3.2 *Measurement of* $N_{L\|}$—Rotate the test grid over the same field and location measured for N_L so that the test lines are oriented parallel to the deformation direction. Do not deliberately orient the grid lines over any particular microstructural feature or features. Count all of the feature interceptions, $N_{\|}$, with the test lines (in the same way as described in 10.3.1) whether they are obviously part of the banded region or not. Calculate the number of interceptions per unit length parallel to the deformation axis, $N_{L\|}$, in accordance with:

$$N_{L\|} = \frac{N_{\|}}{L_t} \tag{2}$$

where:

L_t = true test line length as defined in 10.3.1.

10.3.3 *Measurement of* $P_{L\perp}$—With the test grid perpendicular to the deformation direction, count the number of times the test lines intersect a particle, phase or constituent boundary, $P_{\perp}$, whether the particle, phase or constituent is clearly part of the band or not. Do not count phase or constituent boundaries between like particles, grains, or patches. Count only phase or constituent boundary intersections between unlike particles, grains, or patches. Tangent hits are counted as one intersection. Table 1 provides rules for counting while Fig. 1 illustrates the counting procedure. Calculate the number of boundary intersections per unit length perpendicular to the deformation axis, $P_{L\perp}$, in accordance with:

$$P_{L\perp} = \frac{P_{\perp}}{L_t} \tag{3}$$

where:

L_t = true test line length as defined in 10.3.1.

10.3.4 Measurement of $P_{L\|}$—Rotate the test grid over the same field and location measured for P_L so that the lines are oriented parallel to the deformation direction and count the number of all particle, phase, or constituent boundary intersections, $P_{\|}$, with the test line for the feature of interest (in the same ways as described in 10.3.3). Calculate the number of boundary intersections per unit test length parallel to the deformation axis, $P_{L\|}$, in accordance with:

$$P_{L\|} = \frac{P_{\|}}{L_t} \tag{4}$$

where:

L_t = true test line length as defined in 10.3.1.

10.3.5 *Measurement of AI*—for every single analyzed field of view divide $N_{L\perp}$ by $N_{L\|}$

10.3.6 *Measurement of BR*—for every single analyzed field of view the following calculations have to be done:

10.3.6.1 *Measure* $L_{\|}$—summarize lengths of feature interceptions for a single test line parallel to the deformation.

10.3.6.2 *Calculate linear fraction* $L_{L\|}$—divide $L_{\|}$ by L_t. Repeat steps 10.3.6.1 and 10.3.6.2 for every test line on a field of view and store each individual value ($L_{L\|i}$).

10.3.6.3 *Calculate* $\sigma_{L_{L\|}}$—standard deviation for $L_{L\|}$ using the formula:

$$\sqrt{\frac{\sum_{i=1}^{m}\left(L_{L\|_i} - \overline{L_{L\|}}\right)^2}{m-1}}$$

where: $\overline{L_{L\|}}$—mean linear fraction, *m*– number of test line

10.3.6.4 *Measure* $L_{\perp}$—summarize lengths of feature interceptions for a single test line perpendicular to the deformation direction.

10.3.6.5 *Calculate linear fraction* $L_{L\perp}$—divide $L_{\perp}$ by L_t. Repeat steps 10.3.6.4 and 10.3.6.5 for every test line on a field of view and store each individual value ($L_{L\perp i}$).

10.3.6.6 Calculate $\sigma_{L_{L\perp}}$ – standard deviation for $L_{L\perp}$ using the formula:

$$\sqrt{\frac{\sum_{i=1}^{k}\left(L_{L\perp i} - \overline{L_{L\perp}}\right)^2}{k-1}}$$

where: $\overline{L_{L\perp}}$ — mean linear fraction, *k*–number of test lines.

10.3.6.7 Calculate *BR* for current field of view – divide $\sigma_{L_{L\|}}$ by $\sigma_{L_{L\perp}}$.

AVA Documents
Document Sharing Hub

Full document details: ASTM E1268-19

10.3.7 These measurements should be repeated on at least five fields per sample or location, each selected without operator bias. If the banded condition appears to vary substantially across the longitudinal section, measurements may be made at specific locations, for example, subsurface, mid-thickness and center locations, or at a series of locations across the thickness to assess the positional variability.

10.3.8 Examples of the use of these measurement procedures are given in Annex A1.

10.4 For banded heat-treated microstructures, particularly for alloy steels, the above microstructural measurements may be supplemented by determination of the average microindentation hardness of the bands. Determine the nature of the banding present, for example, light versus dark etching martensite or bainite versus martensite.

10.4.1 Knoop-type indents are made in each band. The load is adjusted so that the indent can be kept completely within the bands. If possible, a 500 gf load should be used, particularly if the equivalent Rockwell C hardness (HRC) is to be estimated. Tests should be conducted according to the guidelines given in Test Methods E384.

10.4.2 The average hardness of at least five indents in each type of band (light vs. dark etching martensite or martensite vs. bainite, depending on the nature of the bands) should be determined. For small segregates, it may not be possible to obtain five or more hardness tests values.

NOTE 3—If the difference in Knoop hardness between the bands is not large, the statistical significance of the difference can be determined using the t-test as described in most statistics textbooks.

10.4.3 Conversion of Knoop hardness (HK) values to the equivalent Rockwell C value (see A370 or E140) must be done with care and may involve considerable error, particularly if the test loads used are lower than 500 gf. Tables from E140 do not provide HK to HRC (or other scales) conversions for steels with hardness above 251 HK; however, Test Methods and Definitions A370 do provide HK to HRC conversions for the hardness range covering heat treated steels. The equations given in Annex A2 may be helpful for such conversions.

10.4.4 For as-quenched carbon and alloy steels with bulk carbon contents from 0.10 to 0.65 %, the carbon contents of the matrix and the segregate streaks or patches may be estimated from the as-quenched hardness. Both the matrix and the segregates must be fully martensitic (except for normal minor amounts of retained austenite) and in the as-quenched condition. The Knoop microindentation hardnesses (500 gf) for matrix and segregate are converted to HRC values ((Eq 15) and (Eq 17) of Annex A2) and the carbon contents are estimated using Eq 16 or Eq 18 (Annex A2), depending on the hardness level.

11. Calculation of Results

11.1 After the desired number of fields n have been measured, or the number of microindentation impressions n have been measured, calculate the mean value of each measurement made by dividing the sum of the measurements by n to determine the average values of $\bar{N}_{L\perp}$, $\bar{N}_{L\parallel}$, $\bar{P}_{L\perp}$, $\bar{P}_{L\parallel}$, $\overline{AI}$, $\overline{BR}$ or the average Knoop microindentation hardness of each type band. For a highly banded microstructure, $\bar{N}_{L\perp}$ (the bar above the quantity indicates an average value) is a measure of the number of bands per mm (one-half $\bar{P}_{L\perp}$ is approximately equal to $\bar{N}_{L\perp}$).

TABLE 2 *t* Values for Calculating 95% Confidence Intervals

NOTE 1—n is the number of measurements. and n—1 is the degrees of freedom to define the value of the student's t used to calculate the 95 % confidence limit.

$n-1$	t	$n-1$	t
2	4.303	7	2.365
3	3.182	8	2.306
4	2.776	9	2.262
5	2.571	10	2.228
6	2.447	...	...

11.2 Next, calculate the standard deviations of these measurements for n fields or n microindentation impressions in accordance with:

$$s = \left[\frac{1}{n-1} \sum_{i=1}^{n} \left[X_i - \bar{X} \right]^2 \right]^{1/2} \tag{5}$$

where:

X_i = individual field measurements and
$\bar{X}$ = mean value.

The measured means and standard deviations can be easily calculated using most pocket calculators.

11.3 Next, calculate the 95 % confidence interval, 95 % CI, for each measurement, in accordance with:

$$95\,\%\ \mathrm{CI} = \pm \frac{ts}{\sqrt{n}} \tag{6}$$

where:

s = standard deviation and

t varies with the number of measurements (see Table 2).

The value of each measurement is expressed as the mean value ± the 95 % CI.

11.4 Next, calculate the % relative accuracy, % RA, of each measurement in accordance with:

$$\%\ \mathrm{RA} = \frac{95\,\%\ CI}{\bar{X}} \times 100 \tag{7}$$

where:

$\bar{X}$ = mean value of each measurement.

The relative accuracy is an estimate of the % error of each measurement as influenced by the field-to-field variability of the values. A relative accuracy of 30 % or less is generally adequate. If the % RA is substantially higher, additional measurements may be made to improve the % RA value.

11.5 The mean spacing (center-to-center) of the banded or oriented phase (constituent), $SB_{\perp}$, can be determined from the reciprocal of $\bar{N}_{L\perp}$:

$$SB_{\perp} = \frac{1}{\bar{N}_{L\perp}} \tag{8}$$

The mean free path spacing (edge-to-edge) may also be calculated. This requires a measurement of the volume fraction, V_V, of the banded or oriented phase (constituent) by

AVA Documents Document Sharing Hub

Full document details: ASTM E1268-19

point counting (see Practice E562) or other suitable methods. The mean free path spacing, $\lambda_\perp$, is calculated in accordance with:

$$\lambda_\perp = \frac{1 - V_V}{\bar{N}_{L\perp}} \tag{9}$$

where:

V_V = is a fraction (not a percentage).

The difference between the mean spacing and the mean free path provides an estimate of the mean width of the banded or oriented phase or constituent.

11.6 The degree of orientation, Ω_{12}, of partially oriented linear structure elements on a two-dimensional plane of polish[5] can be calculated using either the N_L or P_L values determined in 11.1 in accordance with:

$$\Omega_{12} = \frac{\bar{N}_{L\perp} - \bar{N}_{L||}}{\bar{N}_{L\perp} + 0.571\,\bar{N}_{L||}} \text{ or } \Omega_{12} = \frac{\bar{P}_{L\perp} - \bar{P}_{L||}}{\bar{P}_{L\perp} + 0.571\,\bar{P}_{L||}} \tag{10}$$

These two indexes should be approximately equal because, ignoring the influence of tangent hits and counting errors, $P_L = 2N_L$ for such structures. The degree of orientation can vary from zero (completely random distribution) to 1.0 (fully oriented).

12. Test Report

12.1 The report should document the identifying information regarding the specimens tested, their origin, location, product form, date of analysis, number of fields or indents measured, magnification used, etc.

12.2 Describe the nature and extent of the banded or oriented microstructural condition present.

12.3 Depending on the measurements performed, list the mean, standard deviation, 95 % confidence interval and % relative accuracy for each measurement ($N_{L\perp}$, $N_{L||}$, $P_{L\perp}$, $P_{L||}$, *AI* and *BR*, and HK for each type band). Next the degree of orientation value (or values), Ω_{12}, calculated in 11.6. For highly banded microstructures, list the spacing values $SB_\perp$ and $\lambda_\perp$, calculated in 11.5.

12.4 For specimens where the microindentation hardness of the bands was determined, calculate the difference in Knoop hardness between the bands, if desired. Conversion of HK values to HRC (or other scales) may involve considerable error (particularly for test loads below 500 gf). The conversion chart in Test Methods and Definitions A370 and in E140, or the equations in Annex A2, should be used.

12.4.1 For as-quenched carbon and alloy steels with martensitic matrixes and martensitic segregation, the carbon contents of the matrix and segregate can be estimated from the as-quenched hardness using the procedure described in Annex A2. This method is applicable only to steels with carbon contents from 0.10 to 0.65 % and both segregate and matrix must be martensitic. The degree of carbon segregation may be estimated by this method and reported for such specimens.

[5] Underwood, E. E. *Quantitative Stereology*, Addison-Wesley Publishing Co., Inc., Reading, MA, 1970.

13. Precision and Bias

13.1 There are no standards that can be used to rigorously define the precision of banding measurements and detect bias.

13.2 Because banding is detected on longitudinally oriented metallographic specimens taken parallel to the deformation direction, deviations of the plane of polish of more than about 5° will influence measurement results.

13.3 Improper specimen preparation will influence test results. Etching must produce strong contrast between the phases or constituents of interest. It is best if the etchant used does not reveal grain boundaries within a given phase.

13.4 The degree of banding or alignment and the width of the bands will vary across the specimen cross section. Therefore, it is necessary to evaluate the banding or alignment characteristic at specific locations.

13.5 The magnification used can influence test results. The magnification must be high enough to permit accurate counting of feature interceptions or phase boundary intersections. However, the magnification must be kept as low as possible so that each test line traverses a reasonable number of the grains or particles of interest.

13.6 The test lines must be accurately aligned perpendicular and parallel to the deformation direction for accurate counting and determination of $N_{L\perp}$, $N_{L||}$, $P_{L\perp}$, $P_{L||}$, $L_{L||}$ and $L_{L\perp}$. Deviations of more than 5° from perpendicular or parallel must be avoided.

13.7 In general, as the number of fields measured increases, the statistical variability of the test results decreases. For a given number of fields measured, the statistical precision is generally better for coarse structures than for fine structures and for isotropic structures compared to highly banded or aligned structures.

13.8 The counting rules must be followed consistently, otherwise the within-laboratory and between-laboratory repeatability and reproducibility will suffer.

13.9 It is considered that the anisotropy index (AI) and the degree of orientation (Ω_{12}) describe the orientations of the microstructural features while the Banding Rate (BR) describes the number, length and pattern of the alternations of the bands.

13.10 The microindentation hardness procedure for defining the difference in hardness between bands is subject to those factors that influence the precision and bias of such test results (see Test Method E384).

13.11 Conversion of 500 gf Knoop hardness results to HRC values introduces another source of uncertainty which is difficult to define.

13.12 Prediction of the carbon content of as-quenched fully martensitic carbon and alloy steels (matrix and segregate), or the difference in carbon content between the segregate and matrix, should be viewed as an approximation due to the variability of published data for the as-quenched hardness (100 % martensite) as a function of the carbon content of carbon and alloy steels.

AVA Documents
Document Sharing Hub

Full document details: ASTM E1268-19