This international standard was developed in accordance with internationally recognized principles on standardization established in the Decision on Principles for the Development of International Standards, Guides and Recommendations issued by the World Trade Organization Technical Barriers to Trade (TBT) Committee.

Designation: E1354 – 24

An American National Standard

Standard Test Method for Heat and Visible Smoke Release Rates for Materials and Products Using an Oxygen Consumption Calorimeter[1]

This standard is issued under the fixed designation E1354; the number immediately following the designation indicates the year of original adoption or, in the case of revision, the year of last revision. A number in parentheses indicates the year of last reapproval. A superscript epsilon (ε) indicates an editorial change since the last revision or reapproval.

1. Scope*

1.1 This fire-test-response standard provides for measuring the response of materials exposed to controlled levels of radiant heating with or without an external ignitor.

1.2 This test method is used to determine the ignitability, heat release rates, mass loss rates, effective heat of combustion, and visible smoke development of materials and products.

1.3 The rate of heat release is determined by measurement of the oxygen consumption as determined by the oxygen concentration and the flow rate in the exhaust product stream. The effective heat of combustion is determined from a concomitant measurement of specimen mass loss rate, in combination with the heat release rate. Smoke development is measured by obscuration of light by the combustion product stream.

1.4 Specimens shall be exposed to initial test heat fluxes in the range of 0 kW/m^2 to 100 kW/m^2. External ignition, when used, shall be by electric spark. The value of the initial test heat flux and the use of external ignition are to be as specified in the relevant material or performance standard (see X1.2). The normal specimen testing orientation is horizontal, independent of whether the end-use application involves a horizontal or a vertical orientation. The apparatus also contains provisions for vertical orientation testing; this is used for exploratory or diagnostic studies only.

1.5 Ignitability is determined as a measurement of time from initial exposure to time of sustained flaming.

1.6 This test method has been developed for use for material and product evaluations, mathematical modeling, design purposes, or development and research. Examples of material specimens include portions of an end-use product or the various components used in the end-use product.

1.7 *Units*—The values stated in SI units are to be regarded as standard. No other units of measurement are included in this standard.

1.8 *This standard is used to measure and describe the response of materials, products, or assemblies to heat and flame under controlled conditions, but does not by itself incorporate all factors required for fire hazard or fire risk assessment of the materials, products, or assemblies under actual fire conditions.*

1.9 *This standard does not purport to address all of the safety concerns, if any, associated with its use. It is the responsibility of the user of this standard to establish appropriate safety, health, and environmental practices and determine the applicability of regulatory limitations prior to use.* For specific hazard statements, see Section 7.

1.10 *Fire testing is inherently hazardous. Adequate safeguards for personnel and property shall be employed in conducting these tests.*

1.11 *This international standard was developed in accordance with internationally recognized principles on standardization established in the Decision on Principles for the Development of International Standards, Guides and Recommendations issued by the World Trade Organization Technical Barriers to Trade (TBT) Committee.*

2. Referenced Documents

2.1 *ASTM Standards:*[2]

D5865/D5865M Test Method for Gross Calorific Value of Coal and Coke

E176 Terminology of Fire Standards

E177 Practice for Use of the Terms Precision and Bias in ASTM Test Methods

E603 Guide for Room Fire Experiments

E662 Test Method for Specific Optical Density of Smoke Generated by Solid Materials

E691 Practice for Conducting an Interlaboratory Study to Determine the Precision of a Test Method

E906/E906M Test Method for Heat and Visible Smoke Release Rates for Materials and Products Using a Thermopile Method

[1] This test method is under the jurisdiction of ASTM Committee E05 on Fire Standards and is the direct responsibility of Subcommittee E05.21 on Smoke and Combustion Products.

Current edition approved Oct. 1, 2024. Published October 2024. Originally approved in 1990. Last previous edition approved in 2023 as E1354 – 23. DOI: 10.1520/E1354-24.

[2] For referenced ASTM standards, visit the ASTM website, www.astm.org, or contact ASTM Customer Service at www.astm.org/contact. For *Annual Book of ASTM Standards* volume information, refer to the standard's Document Summary page on the ASTM website.

*A Summary of Changes section appears at the end of this standard

Copyright © ASTM International, 100 Barr Harbor Drive, PO Box C700, West Conshohocken, PA 19428-2959. United States

Documents
Document Sharing Hub

Full document details: ASTM E1354-24

2.2 *ISO Standards:*[3]

ISO 5657-1986(E) Fire Tests—Reaction to Fire—Ignitability of Building Materials

ISO 5660-1(2015) Reaction-to-fire Tests—Heat Release, Smoke Production and Mass Loss Rate—Part 1: Heat Release Rate (Cone Calorimeter Method) and Smoke Production Rate (Dynamic Measurement)

ISO 5725-2 (1994) Accuracy (Trueness and Precision) of Measurement Methods and Results—Part 2: Basic Method for the Determination of Repeatability and Reproducibility of a Standard Measurement Method

ISO 9705-1 (2016) Reaction to Fire Tests—Room Corner Test for Wall and Ceiling Lining Products—Part 1: Test Method for a Small Room Configuration

3. Terminology

3.1 *Definitions*—For definitions of terms used in this test method, refer to Terminology E176.

3.1.1 *effective heat of combustion, n*—the amount of heat generated per unit mass lost by a material, product or assembly, when exposed to specific fire test conditions (contrast *gross heat of combustion*).

3.1.1.1 *Discussion*—The effective heat of combustion depends on the test method and is determined by dividing the measured heat release by the mass loss during a specified period of time under the specified test conditions. Typically, the specified fire test conditions are provided by the specifications of the fire test standard that cites effective heat of combustion as a quantity to be measured. For certain fire test conditions, involving very high heat and high oxygen concentrations under high pressure, the effective heat of combustion will approximate the gross heat of combustion. More often, the fire test conditions will represent or approximate certain real fire exposure conditions, and the effective heat of combustion is the appropriate measure. Typical units are kJ/g or MJ/kg.

3.1.2 *gross heat of combustion, n*—the maximum amount of heat per unit mass that theoretically can be released by the combustion of a material, product, or assembly; it can be determined experimentally and only under conditions of high pressure and in pure oxygen (contrast *effective heat of combustion*).

3.1.3 *heat flux, n*—heat transfer to a surface per unit area, per unit time (see also *initial test heat flux*).

3.1.3.1 *Discussion*—The heat flux from an energy source, such as a radiant heater, can be measured at the initiation of a test (such as Test Method E1354 or Test Method E906/E906M) and then reported as the initial test heat flux, with the understanding that the burning of the test specimen can generate additional heat flux to the specimen surface. The heat flux can also be measured at any time during a fire test, for example as described in Guide E603, on any surface, and with measurement devices responding to radiative and convective fluxes. Typical units are kW/m^2, W/cm^2, or BTU/(s ft^2).

3.1.4 *ignitability, n*—the propensity for ignition, as measured by the time to sustained flaming, in seconds, at a specified heating flux.

3.1.5 *initial test heat flux, n*—the heat flux set on the test apparatus at the initiation of the test (see also *heat flux*).

3.1.5.1 *Discussion*—The initial test heat flux is the heat flux value commonly used when describing or setting test conditions.

3.1.6 *oxygen consumption principle, n*—the expression of the relationship between the mass of oxygen consumed during combustion and the heat released.

3.1.7 *smoke obscuration, n*—reduction of light transmission by smoke, as measured by light attenuation.

3.2 *Definitions of Terms Specific to This Standard:*

3.2.1 *critical heat flux for ignition, n*—the midpoint within the range of heat fluxes between the maximum (highest) heat flux that produces no ignition and the minimum (lowest) heat flux that produces ignition, for a specified exposure time.

3.2.2 *heat release rate (in bench-scale heat release tests), n*—the heat evolved from the specimen, per unit of time and area.

3.2.2.1 *Discussion*—The heat release rate measured in this test method is expressed in units of kW/m^2 and not in units of kW.

3.2.3 *net heat of combustion, n*—the oxygen bomb (see Test Method D5865/D5865M) value for the heat of combustion, corrected for gaseous state of product water.

3.2.3.1 *Discussion*—The net heat of combustion differs from the gross heat of combustion in that the former assesses the heat per unit mass generated from a combustion process that ends with water in the gaseous state while the latter ends with water in the liquid state.

3.2.4 *orientation, n*—the plane in which the exposed face of the specimen is located during testing, either vertical or horizontal facing up.

3.2.5 *sustained flaming, n*—existence of flame on or over most of the specimen surface for periods of at least 4 s.

3.2.5.1 *Discussion*—Flaming of less than 4 s duration is identified as flashing or transitory flaming.

3.3 *Symbols:*

A_s = nominal specimen exposed surface area, 0.01 m^2.
C = calibration constant for oxygen consumption analysis, m$^{1/2}$ – kg$^{1/2}$ – $K^{1/2}$.
Δh_c = net heat of combustion, kJ/kg.
$\Delta h_{c,eff}$ = effective heat of combustion, kJ/kg.
I = actual beam intensity.
I_o = beam intensity with no smoke.
k = smoke extinction coefficient, m^{-1}.
L = extinction beam path length, m.
m = specimen mass, kg.
m_f = final specimen mass, kg.
m_i = initial specimen mass, kg.
m = specimen mass loss rate, kg/s.
ΔP = orifice meter pressure differential, Pa.
q''_{tot} = total heat released, kJ/m^2 (Note that kJ ≡ kW·s).
$\dot{q}$ = heat release rate, kW.

[3] Available from American National Standards Institute (ANSI), 25 W. 43rd St., 4th Floor, New York, NY 10036, http://www.ansi.org.

AVA Documents
Document Sharing Hub

Full document details: ASTM E1354-24

$\dot{q}''$ = heat release rate per unit area, kW/m^2.
$\dot{q}''_{max}$ = maximum heat release rate per unit area (kW/m^2).
$\dot{q}''_{180}$ = average heat release rate, per unit area, over the time period starting at t_{ig} and ending 180 s later (kW/m^2).
r = repeatability (the units are the same as for the variable being characterized).
R = reproducibility (the units are the same as for the variable being characterized).
r_o = stoichiometric oxygen/fuel mass ratio (–).
s_r = sample-based standard deviation estimate for repeatability (same units as r).
s_R = sample-based standard deviation estimate for reproducibility (same units as R).
t = time, s.
t_d = oxygen analyzer delay time, s.
t_{ig} = time to sustained flaming (s).
ρ = density (kg/m^3).
Δt = sampling time interval, s.
T_e = absolute temperature of gas at the orifice meter, K.
$\dot{V}$ = volume exhaust flow rate, measured at the location of the laser photometer, m^3/s.
X_{O_2} = oxygen analyzer reading, mole fraction O_2 (–).
$X_{O_2 0}$ = initial value of oxygen analyzer reading (–).
$X_{O_2 1}$ = oxygen analyzer reading, before delay time correction (–).
σ_f = specific extinction area, for smoke, m^2/kg.
σ_r = repeatability standard deviation (same units as r).
σ_R = reproducibility standard deviation (same units as R).

4. Summary of Test Method

4.1 This test method is based on the observation (**1**)[4] that, generally, the net heat of combustion is directly related to the amount of oxygen required for combustion. The relationship is that approximately 13.1 × 10^3 kJ of heat are released per 1 kg of oxygen consumed. Specimens in the test are burned in ambient air conditions, while being subjected to a predetermined initial test heat flux, which can be set from 0 kW/m^2 to 100 kW/m^2. The test permits burning to occur either with or without spark ignition. The primary measurements are oxygen concentrations and exhaust gas flow rate. Additional measurements include the mass-loss rate of the specimen, the time to sustained flaming and smoke obscuration, or as required in the relevant material or performance standard.

5. Significance and Use

5.1 This test method is used primarily to determine the heat evolved in, or contributed to, a fire involving products of the test material. Also included is a determination of the effective heat of combustion, mass loss rate, the time to sustained flaming, and smoke production. These properties are determined on small size specimens that are representative of those in the intended end use.

5.2 This test method is applicable to various categories of products and is not limited to representing a single fire scenario. Additional guidance for testing is given in X1.2.3 and X1.11.

5.3 This test method is not applicable to end-use products that do not have planar, or nearly planar, external surfaces.

[4] The boldface numbers in parentheses refer to the list of references at the end of this test method.

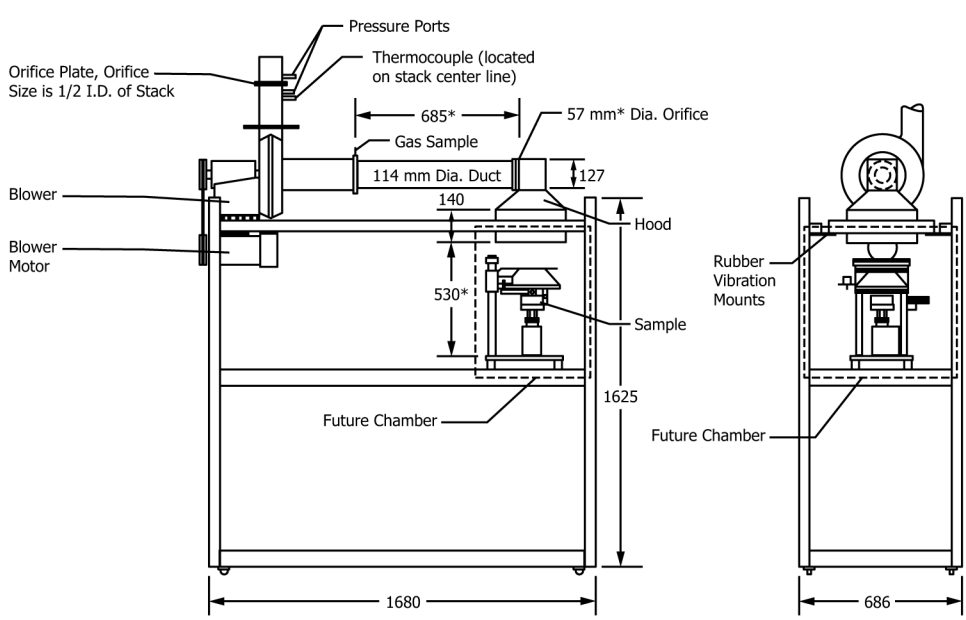

NOTE 1—All dimensions are in millimetres.
NOTE 2—* Indicates a critical dimension.

FIG. 1 Overall View of Apparatus

Documents
Document Sharing Hub
Full document details: ASTM E1354-24

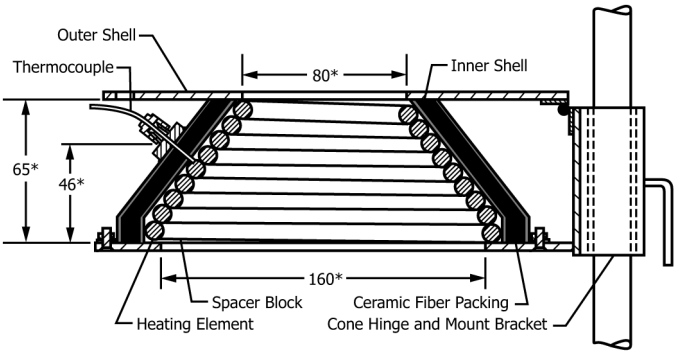

NOTE 1—All dimensions are in millimetres.
NOTE 2—* Indicates a critical dimension.

FIG. 2 Cross-Section View Through the Heater

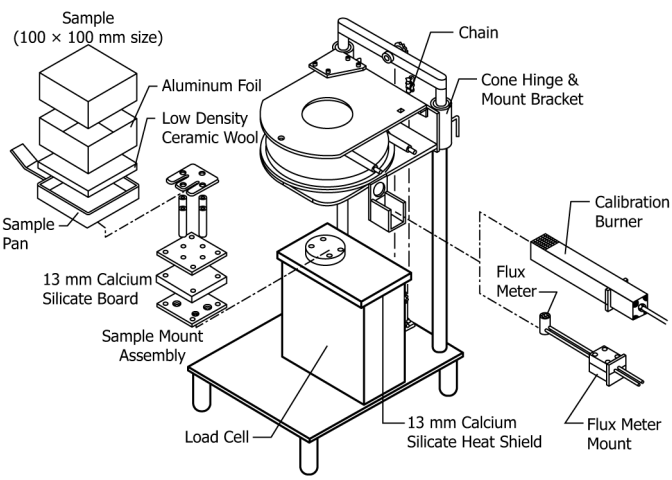

FIG. 3 Exploded View, Horizontal Orientation

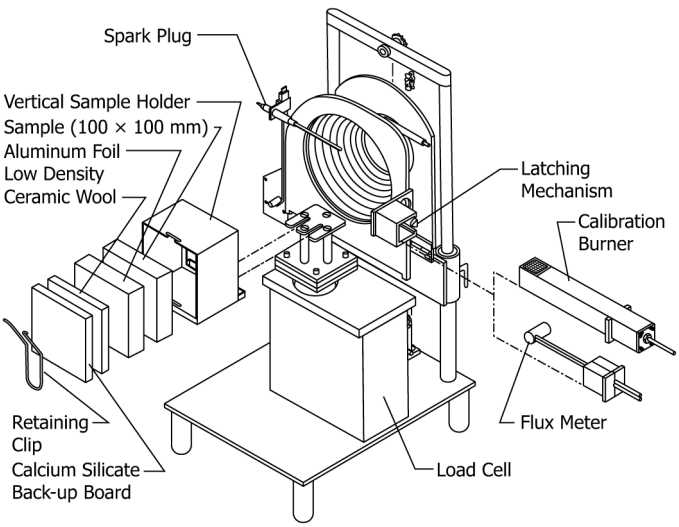

FIG. 4 Exploded View, Vertical Orientation

6. Apparatus

6.1 *General:*

6.1.1 All dimensions given in the figures that are followed by an asterisk are mandatory, and shall be followed within nominal tolerances of ±1 mm, unless otherwise specified. Particularly critical dimensions are followed by an asterisk in Figs. 1-12.

6.1.2 The test apparatus[5] shall consist essentially of the following components: a conical radiant electric heater, capable of horizontal or vertical orientation; specimen holders, different for the two orientations; an exhaust gas system with oxygen monitoring and flow measuring instrumentation; an electric ignition spark plug; a data collection and analysis system; and a load cell for measuring specimen mass loss. A general view of the apparatus is shown in Fig. 1; a cross section through the heater in Fig. 2; and exploded views of horizontal and vertical orientations in Fig. 3 and Fig. 4.

6.1.3 Additional details describing features and operation of the test apparatus are given in Ref (**2**).

6.2 *Conical Heater:*

6.2.1 The active element of the heater shall consist of an electrical heater rod, rated at 5000 W at 240 V, tightly wound into the shape of a truncated cone (Fig. 2 and Fig. 4). The heater shall be encased on the outside with a double-wall stainless steel cone, packed with a refractory fiber material of approximately 100 kg/m^3 density.

6.2.2 The heater shall be hinged so it can be swung into either a horizontal or a vertical orientation. The heater shall be capable of producing irradiances on the surface of the specimen of up to 100 kW/m^2. The irradiance shall be uniform within the central 50 mm by 50 mm area of the specimen to within ±2 % in the horizontal orientation and to within ±10 % in the vertical orientation. As the geometry of the heater is critical, the dimensions on Fig. 2 are mandatory.

6.2.3 The irradiance from the heater shall be capable of being held at a preset level by means of a temperature controller and three type K stainless steel sheathed thermocouples, symmetrically disposed and in contact with, but not welded to, the heater element (see Fig. 2). The thermocouples shall be of equal length and wired in parallel to the temperature controller. The standard thermocouples are sheathed, 1.5 and 1.6 mm outside diameter, with an unexposed hot junction. Alternatively, either 3 mm outside diameter sheathed thermocouples with an exposed hot junction or 1 mm outside diameter sheathed thermocouples with unexposed hot junction can be used.

6.3 *Temperature Controller:*

6.3.1 The temperature controller for the heater shall be capable of holding the element temperature steady to within ±2 °C. A suitable system is a 3-term controller (proportional, integral, and derivative) and a thyristor unit capable of switching currents up to 25 A at 240 V.

6.3.2 The controller shall have a temperature input range of 0 °C to 1000 °C; a set scale capable of being read to 2 °C or better; and automatic cold junction compensation. The controller shall be equipped with a safety feature such that in the event of an open circuit in the thermocouple line, it will cause the temperature to fall to near the bottom of its range.

6.3.3 The thyristor unit shall be of the zero crossing and not of the phase angle type.

[5] A list of suppliers of this apparatus is available from ASTM Headquarters.

AVA Documents
Document Sharing Hub

Full document details: ASTM E1354-24

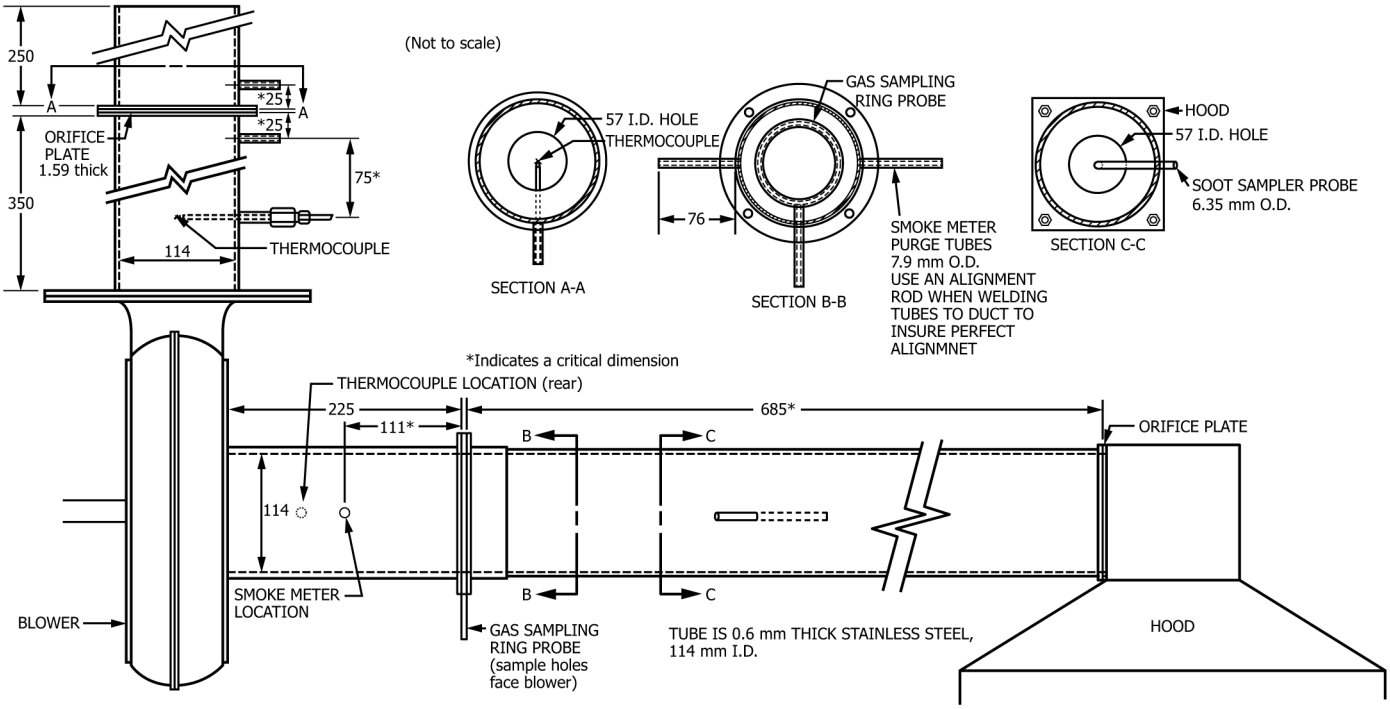

NOTE—All dimensions are in millimetres (not to scale).

NOTE 1—All dimensions are in millimetres (not to scale).

FIG. 5 Exhaust System

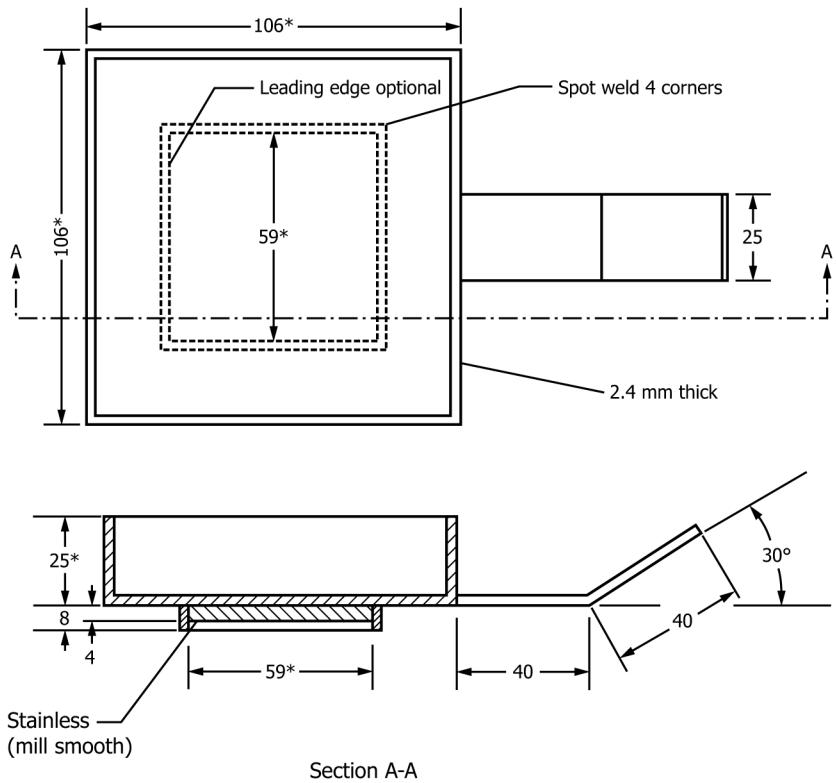

NOTE 1—All dimensions are in millimetres.

NOTE 2—* Indicates a critical dimension.

FIG. 6 Horizontal Specimen Holder

AVA Documents
Document Sharing Hub

Full document details: ASTM E1354-24

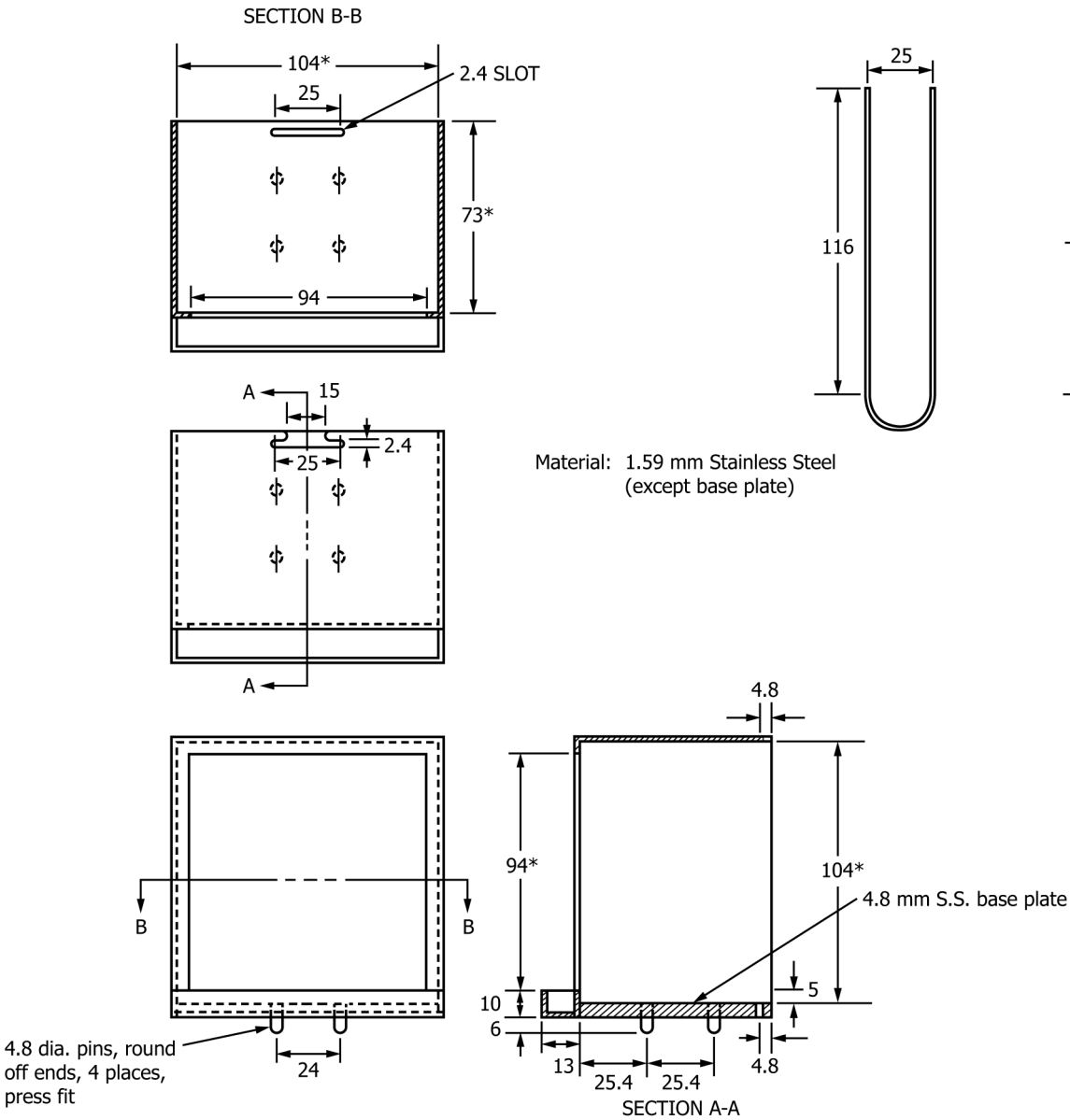

NOTE 1—All dimensions are in millimetres except where noted.
NOTE 2—* Indicates a critical dimension.

FIG. 7 Vertical Specimen Holder

6.3.4 The heater temperature shall be monitored by a meter capable of being read to ±2 °C, or better. It shall be permitted to be incorporated into the temperature controller.

6.4 *Exhaust System:*

6.4.1 The exhaust-gas system shall consist of a high temperature centrifugal exhaust fan, a hood, intake and exhaust ducts for the fan, and an orifice plate flowmeter (Fig. 5). The exhaust system shall be capable of developing flows from 0.012 m^3/s to 0.035 m^3/s.

6.4.2 A restrictive orifice (57 mm inside diameter) shall be located between the hood and the duct to promote mixing.

6.4.3 A ring sampler shall be located in the fan intake duct for gas sampling, 685 mm from the hood (Fig. 1). The ring sampler shall contain twelve holes to average the stream composition with the holes facing away from the flow to avoid soot clogging.

6.4.4 The temperature of the gas stream shall be measured using a 1.0 mm to 1.6 mm outside diameter sheathed-junction thermocouple or a 3 mm outside diameter exposed junction thermocouple positioned in the exhaust stack on the centerline and 100 mm upstream from the measuring orifice plate.

6.4.5 The flow rate shall be determined by measuring the differential pressure across a sharp-edged orifice (57 mm inside diameter) in the exhaust stack, at least 350 mm downstream from the fan when the latter is located as shown in Fig. 5.

AVA Documents
Document Sharing Hub

Full document details: ASTM E1354-24

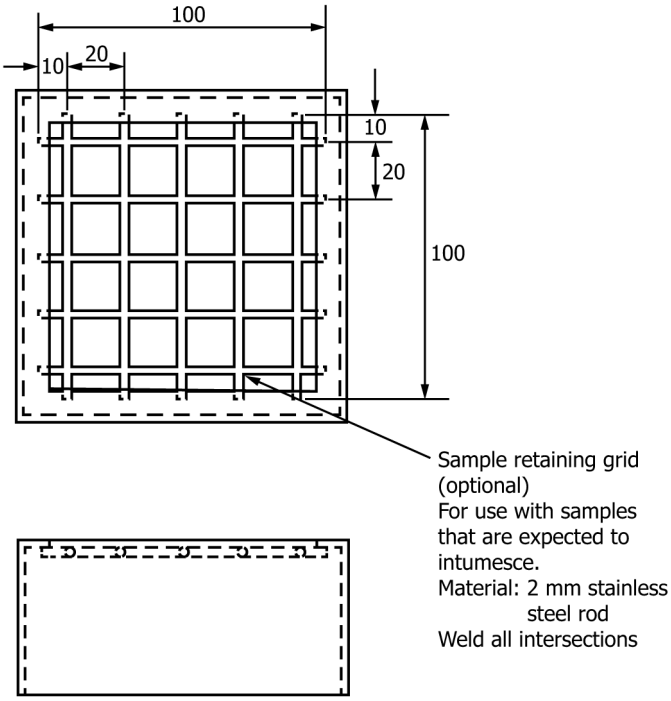

Material: Stainless steel, 1.9 mm thick

NOTE 1—All dimensions are in millimetres.

FIG. 8 Optional Wire Grid (For Horizontal or Vertical Orientation)

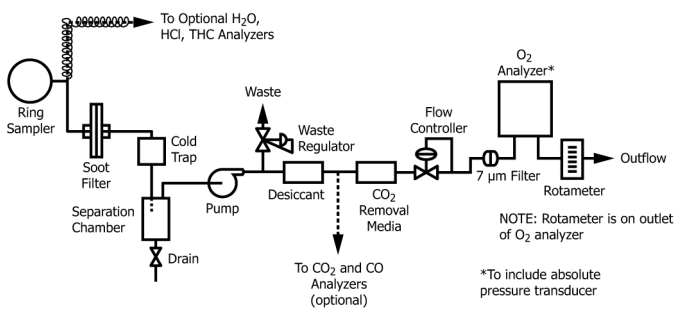

NOTE 1—Rotameter is on outlet of the oxygen (O_2) analyzer.

FIG. 9 Gas Analyzer Instrumentation

6.4.6 In other details, the geometry of the exhaust system is not critical. Where necessary, small deviations from the recommended dimensions given in Fig. 5 shall be permitted to be made. The inner diameter of the duct and the orifice plates is not a critical dimension. Also the fan does not need to be at the exact location as indicated on Fig. 5, but shall be permitted to be further downstream, allowing for a more common type of fan to be used. In this case, sufficient undisturbed inflow distances to the gas sampling probe and the measuring orifice shall be provided for the flow to be uniformly mixed.

6.5 *Load Cell*—The general arrangement of the specimen holders on the load cell is indicated in Fig. 3 and Fig. 4. The load cell shall have an accuracy of 0.1 g, and shall have a total weighing range of at least 3.5 kg of which at least 500 g shall be available for direct monitoring during any single test.

6.6 *Specimen Mounting:*

6.6.1 The horizontal specimen holder is shown in Fig. 6. The bottom shall be constructed of 2.4 mm nominal stainless steel and it shall have outside dimensions of 106 mm by 106 mm by a 25 mm height (tolerance in dimensions: ±2 mm).

6.6.1.1 An open stainless steel square, 59 mm in inside dimensions, shall be spot welded to the underside of the horizontal specimen holder, to facilitate the centering of the specimen under the cone heater. The leading edge of the open square underneath the specimen holder, which is the one opposite the handle, is optional. The open square on the bottom of the specimen holder shall be designed to seat with the sample mount assembly located at the top of the load cell ensuring that the specimen holder is centered with respect to the cone heater.

6.6.2 The bottom of the horizontal specimen holder shall be lined with a layer of low density (nominal density 65 kg/m^3) refractory fiber blanket with a thickness of at least 13 mm. The distance between the bottom surface of the cone heater and the top of the specimen shall be adjusted to be 25 mm except as indicated in 6.6.2.1. For mechanisms constructed according to the drawing in Fig. 2, this is accomplished by using the sliding cone height adjustment.

6.6.2.1 *Intumescent Materials*—Materials that intumesce or deform to such an extent that they make physical contact with either *(a)* the spark plug before ignition or *(b)* the underside of the cone heater after ignition shall be tested by adjusting the distance between the bottom surface of the cone heater and the top of the specimen to 60 mm, or as described in 6.6.4.

6.6.2.2 If a test is conducted in accordance with the specimen mounting in 6.6.2.1 (a 60 mm distance), the heat flux calibration shall be performed with the heat flux meter positioned 60 mm below the cone heater base plate (see 10.1.1 and 10.1.2).

6.6.2.3 If a test is conducted in accordance with the specimen mounting in 6.6.2.1 (a 60 mm distance) and the test specimen intumesces or deforms to such an extent that it makes physical contact with either *(a)* the spark plug, before ignition, or *(b)* the underside of the cone heater after ignition, that test shall be deemed invalid. The material shall be retested as indicated in 6.6.4.1, in 6.6.4.2, or in 6.6.4.4.

6.6.2.4 If a test has been conducted with a distance of 25 mm and the type of physical contact described in 6.6.2.1 has occurred, that test shall be deemed invalid and additional testing shall be conducted in accordance with 6.6.2.1.

6.6.3 The vertical specimen holder is shown in Fig. 7 and includes a small drip tray to contain a limited amount of molten material. A specimen shall be installed in the vertical specimen holder by backing it with a layer of refractory fiber blanket (nominal density 65 kg/m^3), the thickness of which depends on specimen thickness, but shall be at least 13 mm thick. A layer of rigid, ceramic fiber millboard shall be placed behind the fiber blanket layer. The millboard thickness shall be such that the entire assembly is rigidly bound together once the retaining spring clip is inserted behind the millboard. In the vertical orientation, the cone heater height is set so the center lines up with the specimen center.

6.6.4 *Intumescent Materials*—The testing technique to be used when testing intumescing specimens in the horizontal

Document Sharing Hub

Full document details: ASTM E1354-24

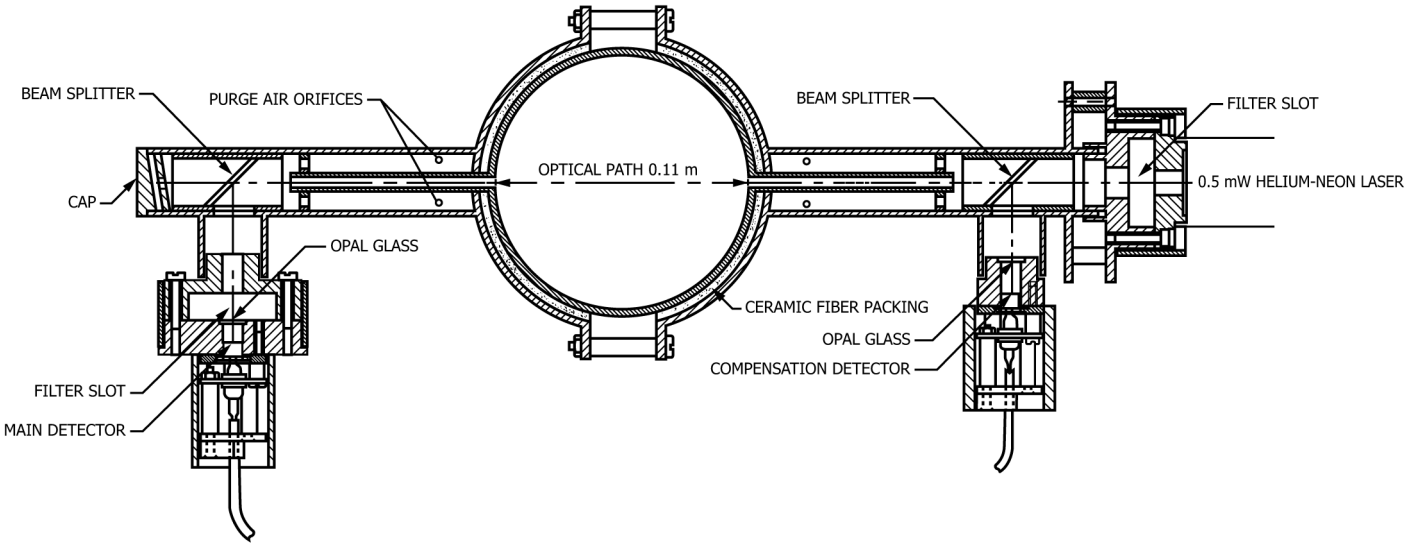

FIG. 10 Smoke Obscuration Measuring System

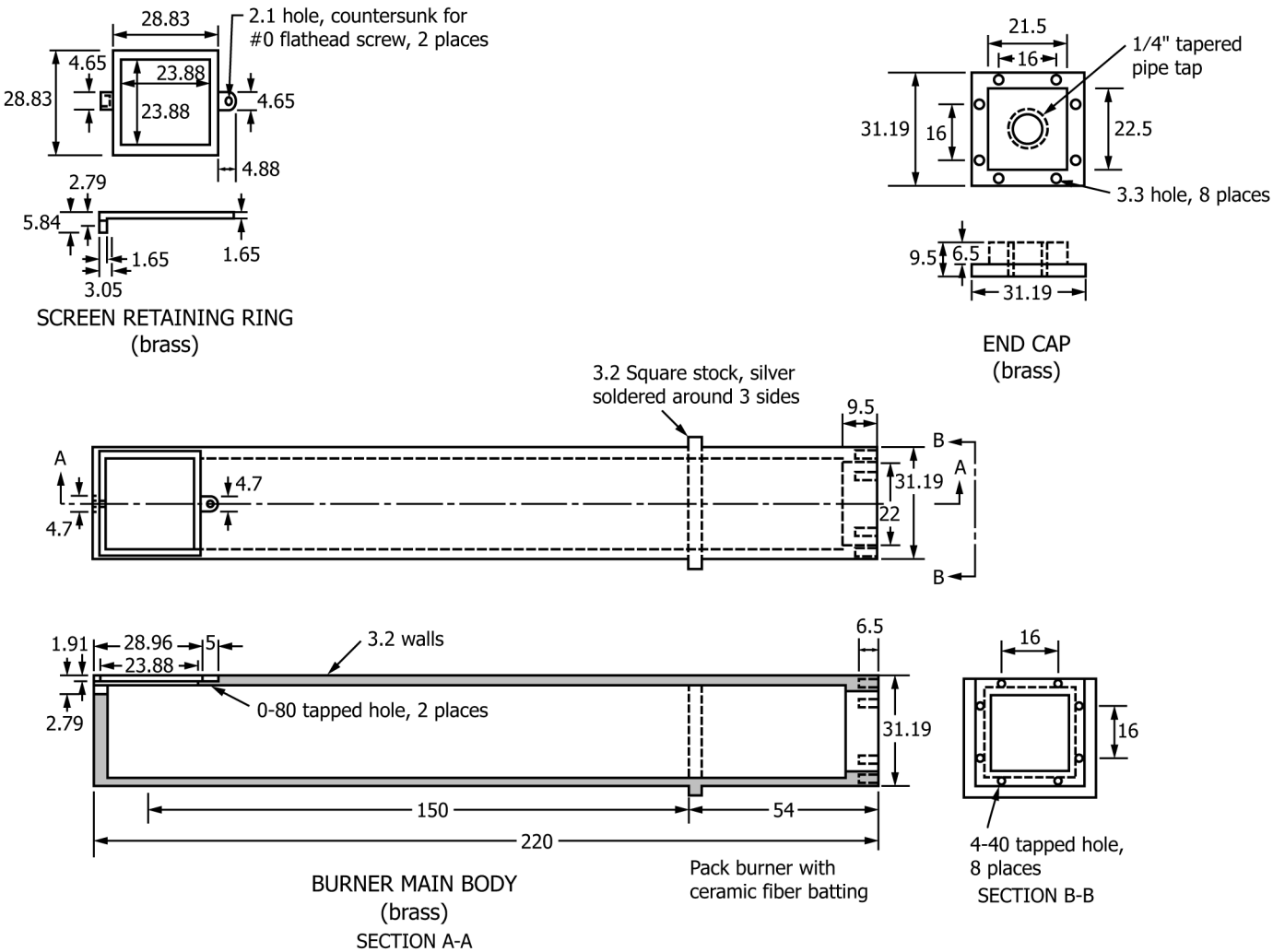

NOTE 1—All dimensions are in millimetres except where noted.

FIG. 11 Calibration Burner

AVA Documents
Document Sharing Hub

Full document details: ASTM E1354-24

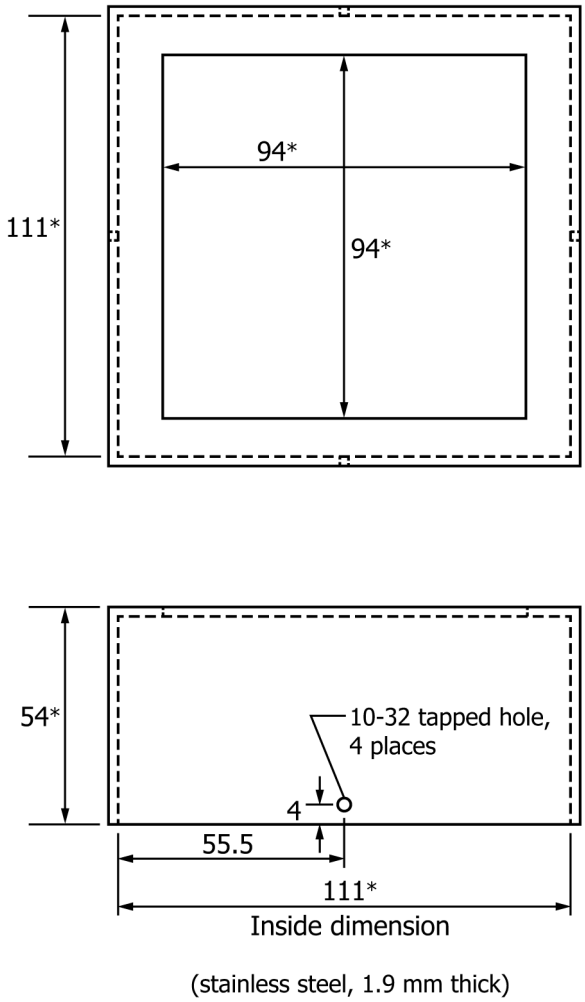

NOTE 1—All dimensions are in millimetres.

NOTE 2—* Indicates a critical dimension.

FIG. 12 Optional Retainer Frame for Horizontal Orientation Testing

orientation shall be documented in the test report. Options include those shown in 6.6.4.1 through 6.6.4.4.

6.6.4.1 Use a retainer frame or edge frame (Fig. 12) in the horizontal orientation.

NOTE 1—The edge frame is used to reduce unrepresentative edge burning of specimens.

6.6.4.2 Use a wire grid (Fig. 8), whether testing is conducted in the horizontal or in the vertical orientations.

NOTE 2—The wire grid is used for retaining specimens prone to delamination and is suitable for several types of intumescent specimens.

6.6.4.3 Use a separation distance between the cone base plate and the upper specimen surface of 60 mm instead of 25 mm. Use this technique for those dimensionally unstable materials that have the potential to intumesce or deform to such an extent that they are likely to make physical contact with either *(a)* the spark plug before ignition or *(b)* the underside of the cone heater after ignition. In this configuration, the spark igniter will be located 48 mm ± 2 mm above the center of the specimen.

NOTE 3—The time to ignition measured with the 60 mm separation is not comparable to that measured with the standard separation of 25 mm.

6.6.4.4 Use a special mounting procedure suitable for the specimen to be tested.

6.6.5 Materials that warp or shrink so that the exposed surface of the test specimen is not flat during testing shall be restrained to maintain the surface in a flat orientation. This shall be accomplished either with four tie wires, as described in 6.6.5.1 through 6.6.5.4, or with the fine wire grid described in 6.6.7.

6.6.5.1 The four tie wires shall be metal wires, 1.0 mm ± 0.1 mm in diameter and at least 350 mm long.

6.6.5.2 The test specimen shall be prepared as described in Section 8 and then tied with the metal wires.

6.6.5.3 A tie wire shall be looped around the specimen holder assembly so that it is parallel to and 20 mm ± 2 mm away from any of the four sides of the assembly. The ends of the tie wire shall be twisted together such that the wire is pulled firmly against the specimen holder assembly. Trim excess wire from the twisted section before testing.

6.6.5.4 Fit the other three tie wires around the specimen holder assembly in a similar manner, so that each one is parallel to one of the sides of the assembly.

6.6.6 *Melting Materials:*

6.6.6.1 Materials that melt and overflow the aluminum foil wrapping (see 8.1.1) during testing shall be tested using aluminum foil that extends above the specimen surface level.

The aluminum foil extension above the specimen surface shall be such that melt overflow is contained, without interfering with the combustion process. A height of 2 mm to 3 mm is recommended.

6.6.6.2 If a test has been conducted as indicated in 8.1.1 without using the special technique described in 6.6.6.1 and melt overflow has occurred, that test shall be deemed invalid and the technique in 6.6.6.1 shall be used for future tests.

6.6.7 *Materials that Distort Extensively*—Materials that distort so extensively that they cannot be held by four wires (as described in 6.6.5) shall be permitted to be tested using the fine wire grid made of 0.8 mm ± 0.1 mm wire with spacing of 20 mm ± 2 mm shown in Fig. 13).

6.7 *Radiation Shield*—The cone heater shall be provided with a removable radiation shield to protect the specimen from the initial test heat flux prior to the start of a test. The shield shall be made of noncombustible material with a total thickness not to exceed 12 mm. The shield shall be one of the following:

(a) water cooled and coated with a durable matte black finish of surface emissivity $e = 0.95 \pm 0.05$ or

(b) not water cooled with a metallic reflective top surface to minimize radiation transfer.

(c) not water-cooled, with a ceramic, non-metallic, surface that minimizes radiation transfer to the specimen surface.

The shield shall be equipped with a handle or other suitable means for quick insertion and removal. The cone heater base plate shall be equipped with the means for holding the shield in position and allowing its easy and quick removal.

6.8 *Ignition Circuit*—External ignition is accomplished by a 10 kV discharge across a 3 mm spark gap located 13 mm ± 2 mm above the center of the specimen in the horizontal

AVA Documents
Document Sharing Hub

Full document details: ASTM E1354-24