Designation: E 1450 – 92 (Reapproved 1998)

Standard Test Method for Tension Testing of Structural Alloys in Liquid Helium[1]

This standard is issued under the fixed designation E 1450; the number immediately following the designation indicates the year of original adoption or, in the case of revision, the year of last revision. A number in parentheses indicates the year of last reapproval. A superscript epsilon (ϵ) indicates an editorial change since the last revision or reapproval.

1. Scope

1.1 This test method describes procedures for the tension testing of structural alloys in liquid helium. The format is similar to that of other ASTM tension test standards, but the contents include modifications for cryogenic testing which requires special apparatus, smaller specimens, and concern for serrated yielding, adiabatic heating, and strain-rate effects.

1.2 To conduct a tension test by this standard, the specimen in a cryostat is fully submerged in normal liquid helium (He I) and tested using crosshead displacement control at a nominal strain rate of 10^{-3} s^{-1} or less. Tests using load control or high strain rates are not considered.

1.3 This standard specifies methods for the measurement of yield strength, tensile strength, elongation, and reduction of area. The determination of the elastic modulus is treated in Test Method E 111.

NOTE 1—The boiling point of normal liquid helium (He I) at sea level is 4.2 K (−452.1°F or 7.6°R). It decreases with geographic elevation and is 4.0 K (−452.5°F or 7.2°R) at the National Institute of Standards and Technology in Colorado, 1677 m (5500 ft) above sea level. In this standard the temperature is designated 4 K.

1.4 Values stated in SI units are treated as primary. Values stated in U.S. customary units are treated as secondary.

1.5 *This standard does not purport to address all of the safety concerns, if any, associated with its use. It is the responsibility of the user of this standard to establish appropriate safety and health practices and determine the applicability of regulatory limitations prior to use.* See Section 5.

2. Referenced Documents

2.1 *ASTM Standards:*

A 370 Test Methods and Definitions for Mechanical Testing of Steel Products[2]

E 4 Practices for Force Verification of Testing Machines[3]

E 6 Terminology Relating to Methods of Mechanical Testing[3]

E 8 Test Methods for Tension Testing of Metallic Materials[3]

E 8M Test Methods for Tension Testing of Metallic Materials [Metric][3]

E 29 Practice for Using Significant Digits in Test Data to Determine Conformance with Specifications[4]

E 83 Practice for Verification and Classification of Extensometers[3]

E 111 Test Method for Young's Modulus, Tangent Modulus, and Chord Modulus[3]

E 1012 Practice for Verification of Specimen Alignment Under Tensile Loading[3]

3. Terminology

3.1 *Definitions:*

3.1.1 The definitions of terms relating to tension testing that appear in Terminology E 6 shall apply here. The definitions in this section also apply.

3.1.2 *adiabatic heating*—the internal heating of a specimen resulting from tension testing under conditions such that the heat generated by plastic work cannot be quickly dissipated to the surrounding cryogen.

3.1.3 *adjusted length of the reduced section*—the length of the reduced section plus an amount calculated to compensate for strain in the fillet region.

3.1.4 *axial strain*—the average of the longitudinal strains measured at opposite or equally spaced surface locations on the sides of the longitudinal axis of symmetry of the specimen. The longitudinal strains are measured using two or more strain-sensing devices located at the mid-length of the reduced section.

3.1.5 *bending strain*—the difference between the strain at the surface of the specimen and the axial strain (the bending strain varies around the circumference and along the reduced section of the specimen).

3.1.6 *Dewar*—a vacuum-insulated container for cryogenic fluids.

3.1.7 *discontinuous yielding stress,* σ_i—the peak stress at the initiation of the first measurable serration on the curve of stress-versus-strain.

3.1.7.1 *Discussion*—The parameter σ_i is a function of test variables and is not a material constant.

[1] This test method is under the jurisdiction of ASTM Committee E-28 on Mechanical Testing and is the direct responsibility of Subcommittee E28.10 on Effect of Temperature on the Properties of Metals.

Current edition approved Jan. 15, 1992. Published April 1992.

[2] *Annual Book of ASTM Standards*, Vol 01.03.

[3] *Annual Book of ASTM Standards*, Vol 03.01.

[4] *Annual Book of ASTM Standards*, Vol 14.02.

Copyright © ASTM International, 100 Barr Harbor Drive, PO Box C700, West Conshohocken, PA 19428-2959, United States.

Documents
Document Sharing Hub

Full document details: ASTM E1450-92(1998)

3.1.8 *gage length*—the original distance between gage marks made on the specimen for determining elongation after fracture.

3.1.9 *length of the reduced section*—the distance between the tangent points of the fillets that bound the reduced section.

3.1.10 *maximum bending strain*—the largest value of bending strain in the reduced section of the specimen.

3.1.10.1 *Discussion*—Maximum bending strength is calculated from strains measured at two, three, or more circumferential positions, and at each of two different longitudinal positions.

3.1.11 *reduced section*—section in the central portion of the specimen, which has a cross section smaller than the gripped ends.

3.1.12 *tensile cryostat*—a test apparatus for applying tensile forces to test specimens in cryogenic environments (Fig. 1).

4. Significance and Use

4.1 Tension tests provide information on the strength and ductibility of materials under uniaxial tensile stresses. This information may be useful for alloy development, comparison and selection of materials, and quality control. Under certain circumstances, the information may also be useful for design.

4.2 The force-time and force-extension records for alloys tested in liquid helium using displacement control are serrated **(1)**.[5] Serrations are formed by repeated bursts of unstable plastic flow and arrests. The unstable plastic flow (discontinuous yielding) is a free-running process occurring in localized regions of the reduced section at higher than nominal rates of strain with internal specimen heating. Examples of serrated stress-strain curves for a typical austenitic stainless steel with discontinuous yielding are shown in Fig. 2.

4.3 A constant specimen temperature cannot be maintained at all times during tests in liquid helium. The specimen temperature at local regions in the reduced section rises temporarily above 4 K during each discontinuous yielding event (see Fig. 2), owing to adiabatic heat. The number of events and the magnitude of the associated load drops are a function of the material composition and other factors such as specimen size and test speed. Typically, altering the mechanical test variables can modify but not eliminate the discontinuous yielding **(2-4)**. Therefore, tensile property measurements of alloys in liquid helium (especially tensile strength, elongation, and reduction of area) lack the usual significance of property measurements at room temperature where deformation is more nearly isothermal and discontinuous yielding typically does not occur.

4.4 The stress-strain response of a material tested in liquid helium depends on whether load control or displacement control is used **(3)**. Crosshead displacement control is specified in this standard since the goal is material characterization by conventional methods. The possibility of a different and less favorable material response must be taken into account when data are used for design in actual applications subject to load-controlled conditions.

[5] The boldface numbers in parentheses refer to the list of references at the end of this test method.

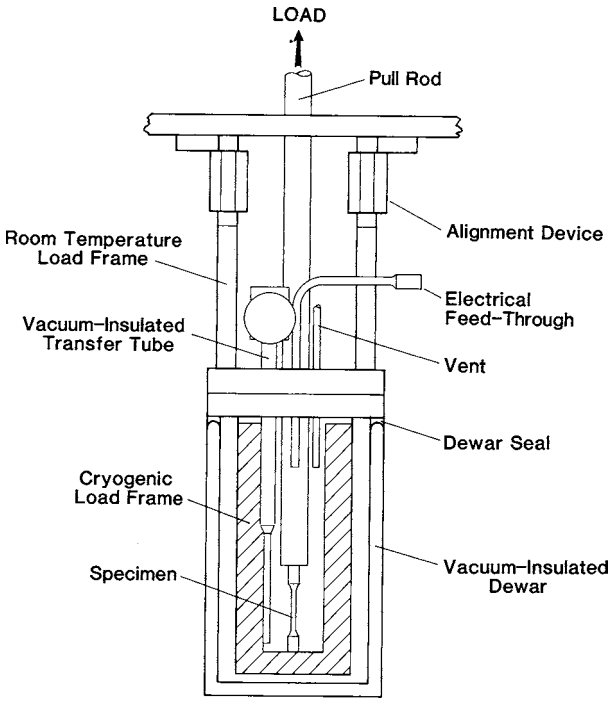

FIG. 1 Schematic Illustration of Typical Cryostat for Tension Testing at 4 K

5. Hazards

5.1 Several precautions must be observed in the use of cryogenic fluids and equipment. Skin or eye contact with cryogens will freeze and destroy tissue. The appropriate protection may require goggles, clothing without pockets or cuffs, gloves, and tongs for handling cold specimens. Cryogenic containers that are internally pressurized or evacuated are potentially hazardous in that damage or leaks can produce explosions or implosions. Also, when liquids evaporate to gases, there is a huge volume increase; therefore asphyxiation is a potential threat where liquid nitrogen or liquid helium evaporates in rooms that are not properly ventilated. Safety guidelines pertaining to the use of liquid helium and other cryogenic fluids are considered elsewhere in more detail **(5)**.

6. Apparatus

6.1 *Test Machines*—Use a test machine that meets the requirements of Practices E 4 regarding verification of force accuracy. Know the test machine compliance (displacement per unit of applied force of the apparatus itself). Measure the compliance by coupling the load train without including a specimen, by replacing the specimen with a rigid block, or by using a special calibration specimen. Then, measure the compliance at a low force and at the highest force used to qualify the machine, as directed in 6.4.1 of this test method.

6.2 *System Design*—Typically, alloys in liquid helium exhibit double or triple their ambient strengths. For the same specimen geometry, higher forces must be applied to the cryostat, test specimen, load train members, and grips at cryogenic temperatures. Since many conventional test machines have a maximum force of 100 kN (22 480 lbf), load

AVA Documents
Document Sharing Hub
Full document details: ASTM E1450-92(1998)

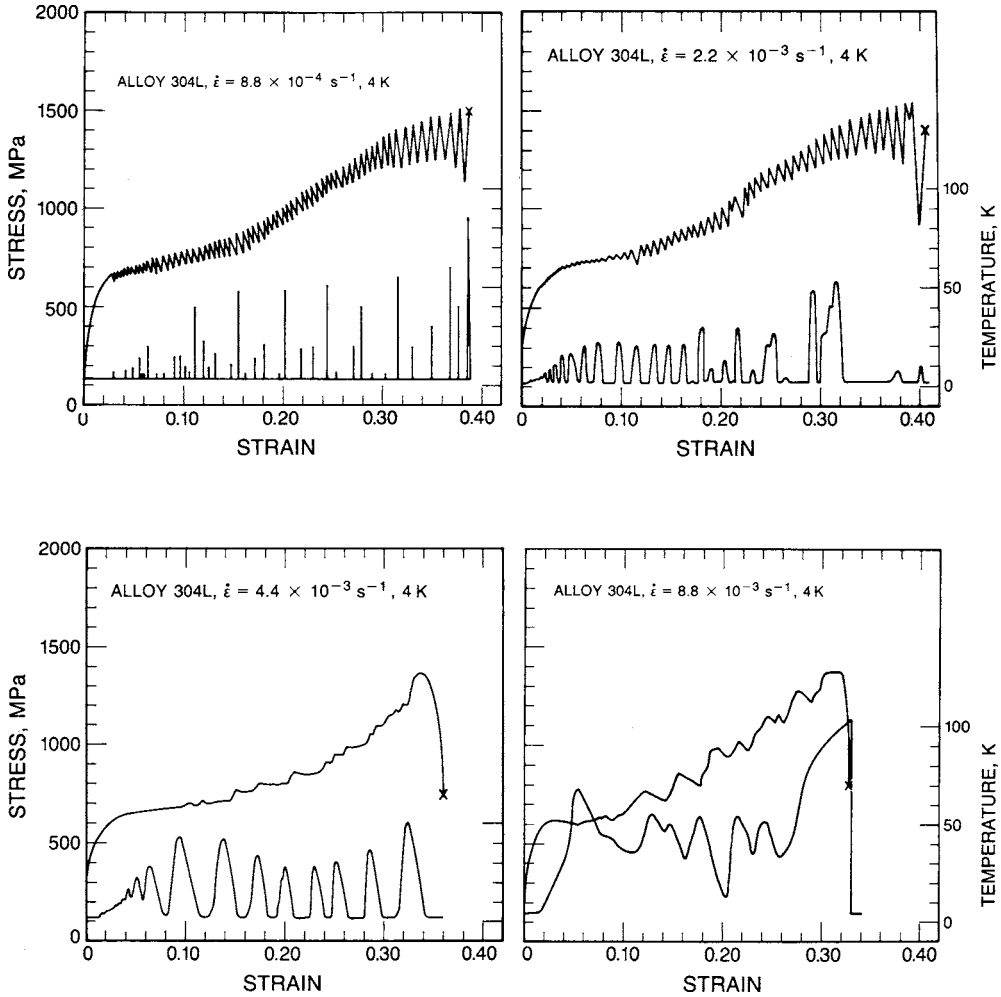

FIG. 2 Typical Engineering Stress-Strain Curves and Specimen Temperature Histories, at Four Different Nominal Strain Rates, for AISI 304L Stainless Steel Tested in Liquid Helium (4)

it is recommended that the apparatus be designed to accommodate one of the small specimens cited in 8.2.2 of this test method.

6.3 *Construction Materials*—Many construction materials, including the vast majority of ferritic steels, are brittle at 4 K. To prevent service failures, fabricate the grips and other load-train members using strong, tough, cryogenic alloys. Materials that have low thermal conductivity are desirable to reduce heat flow. Austenitic stainless steels (AISI 304LN), maraging steels (200, 250, or 300 grades, with nickel plating to prevent rust), and extra-low-interstitial (ELI) grade titanium alloys (Ti-6Al-4V and Ti-5Al-2.5Sn) have been used with proper design, for grips, pull rods, and cryostat frames. Nonmetallic materials (for example, glass-epoxy composites) are excellent insulators and are sometimes used for compression members.

6.4 *Alignment*:

6.4.1 Proper system alignment is essential to avoid bending strains in the tension tests.

6.4.2 *Single-Specimen Apparatus*—For a conventional single-specimen cryostat, the machine and grips should be capable of applying force to a precisely machined calibration specimen so that the maximum bending strain does not exceed 10 % of the axial strain. Reduce bending strain to an acceptable level by making proportional adjustments to a cryostat having alignment capability, or by using spacing shims to compensate an unadjustable fixture. Calculate the strain based on readings taken while the calibration specimen is subjected to a low force, as well as at the highest force for which the machine and load train are being qualified. Procedures for measuring specimen alignment are given in Practice E 1012.

NOTE 2—This requirement will minimize contributions from the test apparatus to the bending strain. Tests performed with a qualified apparatus may still vary in amount of bending strain owing to small variations in the proposed test specimen configurations, or differences in machining.

6.4.3 *Multiple-Specimen Apparatus*—For this type of cryostat the alignment depends on the type of fixtures used. Measure and record the maximum bending strain.

6.4.4 Qualify the apparatus by making axiality measurements at room temperature and at 4 K. To perform axiality tests of the apparatus, the specimen form should be the same as that used during cryogenic tests, and the specimen concentricity should be as nearly perfect as possible. No plastic strain should

AVA Documents
Document Sharing Hub

Full document details: ASTM E1450-92(1998)