NOTICE: This standard has either been superseded and replaced by a new version or withdrawn.
Contact ASTM International (www.astm.org) for the latest information

Designation: E 1798 – 96 (Reapproved 2001)

Standard Test Method for Assessing Treatability or Biodegradability, or Both, of Organic Chemicals in Porous Pots[1]

This standard is issued under the fixed designation E 1798; the number immediately following the designation indicates the year of original adoption or, in the case of revision, the year of last revision. A number in parentheses indicates the year of last reapproval. A superscript epsilon (ϵ) indicates an editorial change since the last revision or reapproval.

1. Scope

1.1 This test method covers simulating the activated sludge sewage treatment process and therefore gives a measure of the extent of biodegradation or removal likely to occur during sewage treatment.

1.2 Assessment of treatability or biodegradability, or both, of water soluble organic compounds in the porous pot test requires dissolved organic carbon (DOC) measurements or specific chemical analysis.

1.2.1 Dissolved organic carbon (DOC) measurements, relative to the controls, can be used to calculate the removal of the test chemical or water soluble residues by the porous pot treatment (see 12.3). The DOC measurements do not identify water soluble chemicals. Specific chemical analysis, on the other hand, can be used to identify and quantify the parent test chemical or (if standards are available) any water soluble residues formed by the porous pot treatment. A specific chemical analytical method must have a limit of detection (LOD) ≤0.1 mg/L in water or ≤0.1 mg/Kg in solids.

1.3 The feature that distinguishes this test from other activated sludge simulation tests is the retention of the activated sludge in a porous liner, that eliminates the need for a secondary clarifier and facilitates control of the critical parameter, the sludge retention time (SRT).

1.4 Porous pots can be completely sealed and tests using ^{14}C-labeled test compounds are then possible. Carbon dioxide in the exhaust gas and bicarbonate in the effluent can be used together to assess the extent of mineralization, and levels of radiolabel in the sludge and in the aqueous phase may also be determined.

1.5 By simultaneously measuring the efficiency of the pots in removing DOC, it is also possible to determine whether the test compound has any adverse effect on normal sewage treatment processes.

1.6 The SI units given in parentheses are for information only.

1.7 *This standard does not purport to address all of the safety concerns, if any, associated with its use. It is the responsibility of the user of this standard to establish appropriate safety and health practices and determine the applicability of regulatory limitations prior to use.* For specific hazard statements see Section 6.

2. Referenced Documents

2.1 *ASTM Standards:* [2]

E 178 Practice for Dealing with Outlying Observations

3. Terminology

3.1 *Definitions of Terms Specific to This Standard:*

3.1.1 *aeration chamber*—the interior volume of the porous liner or candle that holds the activated sludge.

3.1.2 *activated sludge (mixed liquor)*—a heterogeneous mixture, suspended in sewage influent, consisting of a variety of microorganisms (primarily bacteria) formed into flocculent particles, that is cultured for the purpose of removing organic substrates and certain inorganic constituents from wastewaters by metabolic uptake and growth on these substrates. Normal operating concentrations of activated sludge in aeration units range from 2000 to 5000 mg/L (**1**).[3]

3.1.3 *biochemical oxygen demand (BOD)*—the biochemical oxygen demand, measured as the amount of oxygen used for respiration during the aerobic metabolism of an energy source by acclimated microorganisms. Carbonaceous BOD is a measure of the amount of oxygen used during the metabolism of an organic substrate and represents the amount of COD that has been oxidized biologically at any time. Nitrogenous BOD is a measure of the amount of oxygen required for the biological oxidation of inorganic nitrogen compounds (nitrification). BOD_5 is the biochemical oxygen demand after five days of incubation (**1**).

[1] This test method is under the jurisdiction of ASTM Committee E47 on Biological Effects and Environmental and is the direct responsibility of Subcommittee E47.04 on Environmental Fate of Chemical Substances.

Current edition approved March 10, 1996. Published May 1996.

[2] For referenced ASTM standards, visit the ASTM website, www.astm.org, or contact ASTM Customer Service at service@astm.org. For *Annual Book of ASTM Standards* volume information, refer to the standard's Document Summary page on the ASTM website.

[3] The boldface numbers given in parentheses refer to a list of references at the end of the text.

Copyright © ASTM International, 100 Barr Harbor Drive, PO Box C700, West Conshohocken, PA 19428-2959, United States.

Documents
Document Sharing Hub
Full document details: ASTM E1798-96(2001)

3.1.4 *biodegradation*—destruction of chemical compounds by the biological action of living organisms (**2**).

3.1.5 *chemical oxygen demand (COD)*—the amount of oxygen required to oxidize the organic matter in a given sample under the best possible analytical conditions for maximum oxidation of the organic matter to carbon dioxide and water. The theoretical COD (COD_{th}) is the COD that can be calculated from a balanced equation for total oxidation of the organic matter to carbon dioxide and water; for this, the empirical formula for the organic matter must be known (**1**).

3.1.6 *effluent—as used in this standard*, treated and clarified wastewater leaving an activated sludge treatment system.

3.1.7 *hydraulic retention time (HRT)—as used in this standard*, average liquid through-put time. Mathematically equal to reactor volume/liquid flow rate.

3.1.8 *mineralization*—conversion of organic compounds in a wastewater to CO_2, H_2O and simple salts by microbiological oxidation (**1**).

3.1.9 *mixed liquor volatile suspended solids (MLVSS)—as used in this standard*, that portion of the activated sludge which is lost by ignition at 550°C for 15 min. It corresponds to the biological and organic fraction of the solids.

3.1.10 *OECD*—Organization for Economic Cooperation and Development (**3**).

3.1.11 *primary biodegradation*—oxidation or alteration of a molecule by bacterial action to such an extent that characteristic properties of the chemical are no longer evident or when it no longer responds to analytical procedures specific for detecting the original compound (**2**).

3.1.12 *primary treatment*—the removal of separable materials from wastewaters by sedimentation (**1**).

3.1.13 *secondary clarifier*—a settling tank used to separate the solids from the liquids in activated sludge mixed liquor (**1**).

3.1.14 *secondary treatment*—the removal of colloidal and soluble organic material from wastewaters. Settleable material is usually removed prior to secondary treatment. Secondary treatment processes are usually biological in nature, for example, activated sludge or trickling filtration, but may be chemical and physical in nature. The term secondary treatment is sometimes used to indicate a certain level of removal of biochemical oxygen-demanding materials (**1**).

3.1.15 *settled domestic sewage—as used in this standard*, raw domestic sewage which has been allowed to settle for at least 2 h.

3.1.16 *sludge retention time (SRT)—as used in this standard*, average time (usually measured in days) that activated sludge is retained in the aeration or treatment chamber. Mathematically equal to the total solids in the system/solids wasted per day.

3.1.17 *treatability*—removal of a compound from wastewater by a particular sewage treatment process whether by biodegradation or by some other means (**2**).

3.1.18 *ultimate biodegradation*—complete conversion of a molecule to carbon dioxide, water, inorganic salts and products associated with the normal metabolic processes of bacteria (**2**).

4. Summary of Test Method

4.1 This test method is designed to simulate the activated sludge sewage treatment process and is performed using a porous pot-type laboratory-scale activated sludge apparatus, based on an original design developed by the United Kingdom Water Research Centre (**4,5**). The original design was modified (see Fig. 1) (**6**) and has been utilized in determining the effects of temperature and growth media components, for example, phosphate, on the growth of activated sludge and the toxicity of treated effluents (**7,8**). It has also been used in the environmental safety evaluation of a new product (**9**). The modified test facilitates control of the SRT, and the effect of this fundamental parameter on the efficiency of removal of surfactants in porous pots has been described (**10**).

4.2 The test and control pots are filled with mixed liquor from an activated sludge plant treating predominately domestic sewage and then operated as continuous-flow systems with primary effluent or settled domestic sewage as background feed.

4.3 A solution or suspension of the test compound is dosed into the test pot by means of a suitable micro-metering pump. The concentration of the test compound in the influent sewage is 10 to 20 mg C/L since the practical lower detection limit of the DOC analyzer is 1 to 3 mg C/L. A lower concentration of the test compound may be used if a highly sensitive analytical method is available or if radiolabeled compound is used. The total flow to the pot (sewage + test compound dosing solution) is controlled to give the required hydraulic retention time.

4.3.1 A similar flow of sewage and a dosing solution of a suitable reference compound such as sodium benzoate are added to the control pots. Benzoate biodegrades easily and completely in this test system, and is added at such a concentration as to ensure that the total organic carbon load and the total sewage flow are the same in both control and test pots. Reference compounds may also have other uses (see 11.5).

4.4 Air is supplied to the pots through a diffuser stone to ensure adequate oxygen transfer to the mixed liquor, and an additional flow through a 5 mm open tube is provided to ensure complete mixing of the system. The air flow should be sufficient to maintain and thoroughly mix the solids in suspension and keep the concentration of dissolved oxygen above 2 mg/L at all times. In order to maintain an adequate dissolved oxygen (DO) concentration it will be necessary to maintain an air to wastewater flow ratio of 5 to 10/1 on a volume to volume basis.

4.5 Sludge is wasted directly from the aeration chamber through the base of the pot by means of a suitable peristaltic pump. To avoid problems caused by the low flow rates required, the pump is fitted with a timer and operated intermittently.

4.6 The levels of biodegradable materials remaining in the unit effluents are dependent on the SRT and the growth kinetics of those organisms that are involved in the metabolism of the compound under consideration. The test is therefore, in effect, a kinetic study and consequently should be conducted at a constant temperature. Further, by making measurements at two or more temperatures, the biodegradability of the test compound under summer and winter operating conditions may be established.

AVA Documents
Document Sharing Hub

Full document details: ASTM E1798-96(2001)

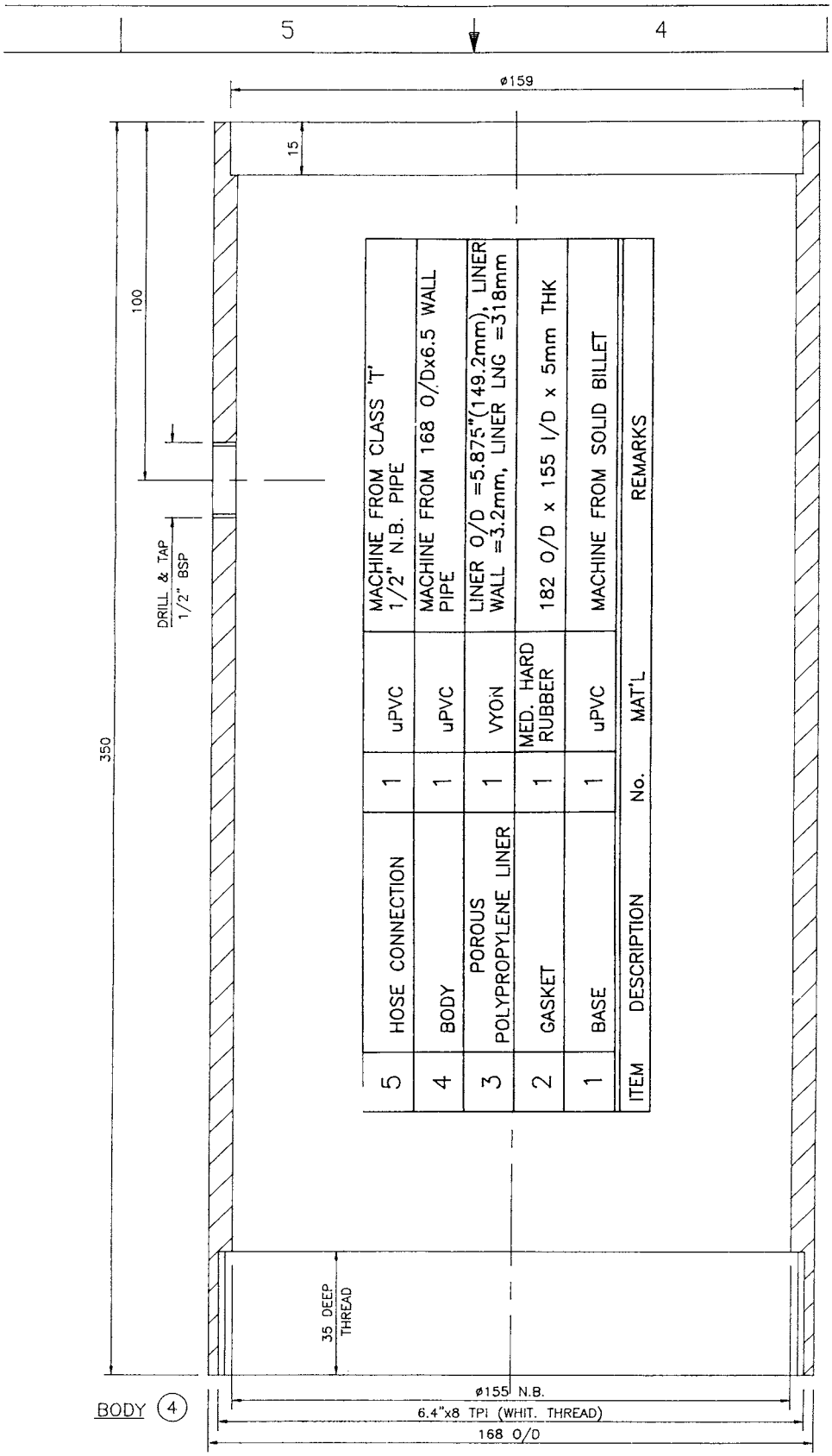

FIG. 1 Porous Pot Unit

Documents
Document Sharing Hub
Full document details: ASTM E1798-96(2001)

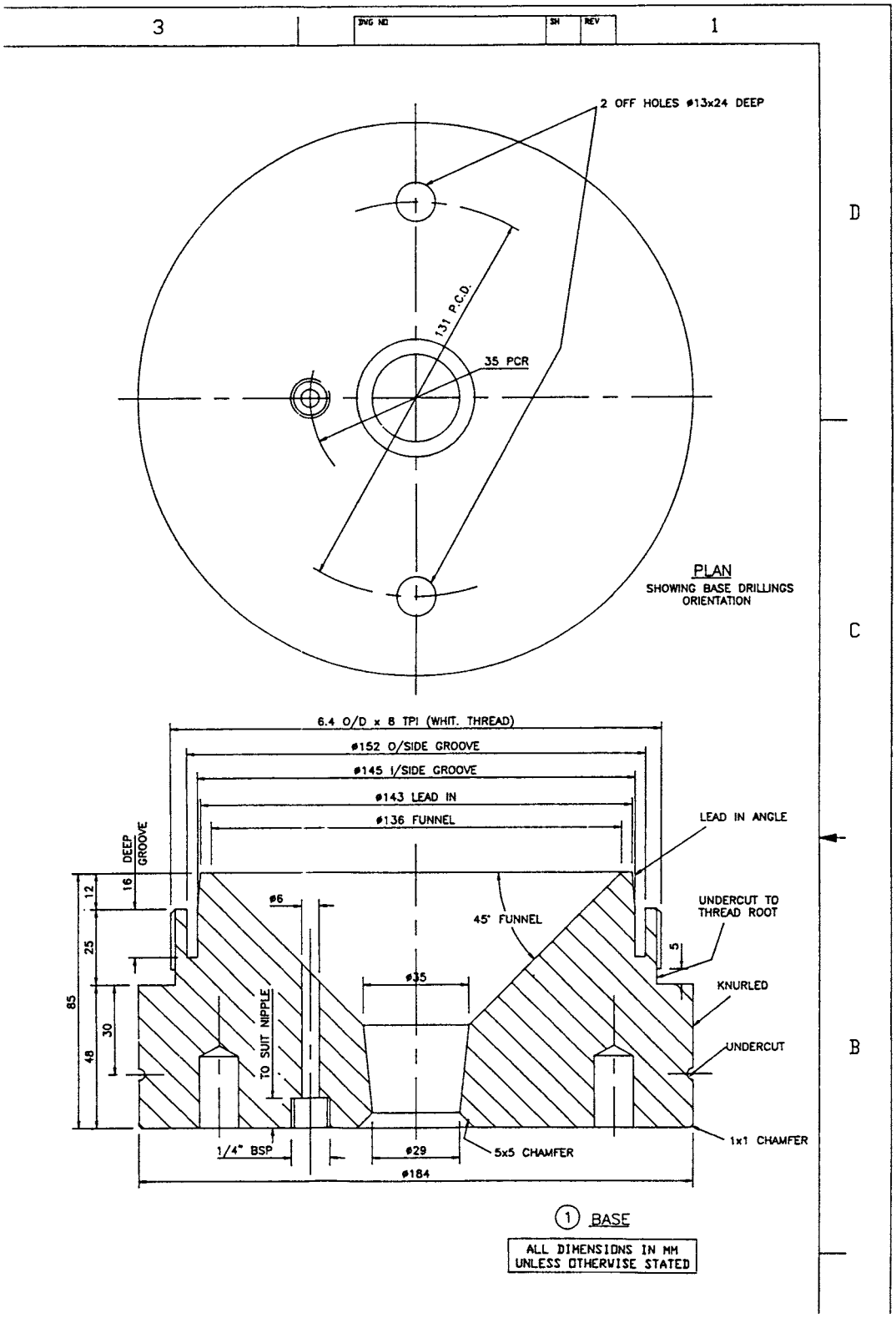

FIG. 1 *(continued)*

Documents
Document Sharing Hub

Full document details: ASTM E1798-96(2001)