This international standard was developed in accordance with internationally recognized principles on standardization established in the Decision on Principles for the Development of International Standards, Guides and Recommendations issued by the World Trade Organization Technical Barriers to Trade (TBT) Committee.

Designation: E1820 – 24

Standard Test Method for Measurement of Fracture Toughness[1]

This standard is issued under the fixed designation E1820; the number immediately following the designation indicates the year of original adoption or, in the case of revision, the year of last revision. A number in parentheses indicates the year of last reapproval. A superscript epsilon (ε) indicates an editorial change since the last revision or reapproval.

1. Scope*

1.1 This test method covers procedures and guidelines for the determination of fracture toughness of metallic materials using the following parameters: *K, J*, and CTOD (δ). Toughness can be measured in the *R*-curve format or as a point value. The fracture toughness determined in accordance with this test method is for the opening mode (Mode I) of loading.

NOTE 1—Until this version, K_{Ic} could be evaluated using this test method as well as by using Test Method E399. To avoid duplication, the evaluation of K_{Ic} has been removed from this test method and the user is referred to Test Method E399.

1.2 The recommended specimens are single-edge bend, [SE(B)], compact, [C(T)], and disk-shaped compact, [DC(T)]. All specimens contain notches that are sharpened with fatigue cracks.

1.2.1 Specimen dimensional (size) requirements vary according to the fracture toughness analysis applied. The guidelines are established through consideration of material toughness, material flow strength, and the individual qualification requirements of the toughness value per values sought.

NOTE 2—Other standard methods for the determination of fracture toughness using the parameters *K, J*, and CTOD are contained in Test Methods E399, E1290, and E1921. This test method was developed to provide a common method for determining all applicable toughness parameters from a single test.

1.3 The values stated in SI units are to be regarded as standard. The values given in parentheses after SI units are provided for information only and are not considered standard.

1.4 *This standard does not purport to address all of the safety concerns, if any, associated with its use. It is the responsibility of the user of this standard to establish appropriate safety, health, and environmental practices and determine the applicability of regulatory limitations prior to use.*

1.5 *This international standard was developed in accordance with internationally recognized principles on standardization established in the Decision on Principles for the Development of International Standards, Guides and Recommendations issued by the World Trade Organization Technical Barriers to Trade (TBT) Committee.*

2. Referenced Documents

2.1 *ASTM Standards:*[2]

E4 Practices for Force Calibration and Verification of Testing Machines

E8/E8M Test Methods for Tension Testing of Metallic Materials

E21 Test Methods for Elevated Temperature Tension Tests of Metallic Materials

E23 Test Methods for Notched Bar Impact Testing of Metallic Materials

E399 Test Method for Linear-Elastic Plane-Strain Fracture Toughness of Metallic Materials

E1290 Test Method for Crack-Tip Opening Displacement (CTOD) Fracture Toughness Measurement (Withdrawn 2013)[3]

E1823 Terminology Relating to Fatigue and Fracture Testing

E1921 Test Method for Determination of Reference Temperature, T_0, for Ferritic Steels in the Transition Range

E1942 Guide for Evaluating Data Acquisition Systems Used in Cyclic Fatigue and Fracture Mechanics Testing

E2298 Test Method for Instrumented Impact Testing of Metallic Materials

2.2 *ASTM Data Sets:*[4]

E1820/1–DS1(2016) Standard data set 1 to evaluate computer algorithms for evaluation of J_{Ic} using Annex 9 of E1820

E1820/2–DS2(2020) Standard data set 2 to evaluate computer algorithms for evaluation of J_{Ic} using Annex 9 of E1820

E1820/3–DS3(2020) Standard data set 3 to evaluate computer algorithms for evaluation of J_{Ic} using Annex 9 of E1820

[1] This test method is under the jurisdiction of ASTM Committee E08 on Fatigue and Fracture and is the direct responsibility of Subcommittee E08.07 on Fracture Mechanics.

Current edition approved May 1, 2024. Published May 2024. Originally approved in 1996. Last previous edition approved in 2023 as E1820 – 23b. DOI: 10.1520/E1820-24

[2] For referenced ASTM standards, visit the ASTM website, www.astm.org, or contact ASTM Customer Service at service@astm.org. For *Annual Book of ASTM Standards* volume information, refer to the standard's Document Summary page on the ASTM website.

[3] The last approved version of this historical standard is referenced on www.astm.org.

[4] These data sets are available for download from ASTM at https://www.astm.org/get-involved/technical-committees/adhoc-e08.html

*A Summary of Changes section appears at the end of this standard

Copyright © ASTM International, 100 Barr Harbor Drive, PO Box C700, West Conshohocken, PA 19428-2959. United States

Documents
Document Sharing Hub
Full document details: ASTM E1820-24

E1820/4–DS4(2020) Standard data set 4 to evaluate computer algorithms for evaluation of J_{Ic} using Annex 9 of E1820
E1820/5–DS5(2020) Standard data set 5 to evaluate computer algorithms for evaluation of J_{Ic} using Annex 9 of E1820
E1820/6–DS6(2020) Standard data set 6 to evaluate computer algorithms for evaluation of J_{Ic} using Annex 9 of E1820
E1820/7–DS7(2020) Standard data set 7 to evaluate computer algorithms for evaluation of J_{Ic} using Annex 9 of E1820
E1820/8–DS8(2020) Standard data set 8 to evaluate computer algorithms for evaluation of J_{Ic} using Annex 9 of E1820
E1820/9–DS9(2020) Standard data set 9 to evaluate computer algorithms for evaluation of J_{Ic} using Annex 9 of E1820

3. Terminology

3.1 Terminology E1823 is applicable to this test method. Only items that are exclusive to Test Method E1820, or that have specific discussion items associated, are listed in this section.

3.2 *Definitions of Terms Specific to This Standard:*

3.2.1 *compliance [LF^{-1}], n*—the ratio of displacement increment to force increment.

3.2.2 *crack opening displacement (COD) [L], n*—force-induced separation vector between two points at a specific gage length. The direction of the vector is normal to the crack plane.

3.2.2.1 *Discussion—In this practice, displacement,* v, is the total displacement measured by clip gages or other devices spanning the crack faces.

3.2.3 *crack extension, Δa [L], n*—an increase in crack size.

3.2.4 *crack-extension force, G [FL^{-1} or FLL^{-2}], n*—the elastic energy per unit of new separation area that is made available at the front of an ideal crack in an elastic solid during a virtual increment of forward crack extension.

3.2.5 *crack-tip opening displacement (CTOD), δ [L], n*—crack displacement resulting from the total deformation (elastic plus plastic) at variously defined locations near the original (prior to force application) crack tip.

3.2.5.1 *Discussion—In this test method*, CTOD is the displacement of the crack surfaces normal to the original (unloaded) crack plane at the tip of the fatigue precrack, a_o. In this test method, CTOD is calculated at the original crack size, a_o, from measurements made from the force versus displacement record.

3.2.5.2 *Discussion—In CTOD testing*, δ_{Ic} [L] is a value of CTOD near the onset of slow stable crack extension, here defined as occurring at $\Delta a_p = 0.2$ mm (0.008 in.) + $0.7\delta_{Ic}$.

3.2.5.3 *Discussion—In CTOD testing*, δ_c [L] is the value of CTOD at the onset of unstable crack extension (see 3.2.36) or pop-in (see 3.2.22) when $\Delta a_p < 0.2$ mm (0.008 in.) + $0.7\delta_c$. δ_c corresponds to the force P_c and clip-gage displacement v_c (see Fig. 1). It may be size-dependent and a function of test specimen geometry.

3.2.5.4 *Discussion—In CTOD testing*, δ_u [L] is the value of CTOD at the onset of unstable crack extension (see 3.2.36) or pop-in (see 3.2.22) when the event is preceded by Δa_p >0.2 mm (0.008 in.) + $0.7\delta_u$. The δ_u corresponds to the force P_u and the clip gage displacement v_u (see Fig. 1). It may be size-dependent and a function of test specimen geometry. It can be useful to define limits on ductile fracture behavior.

3.2.5.5 *Discussion—In CTOD testing, δ_c^* [L]* characterizes the CTOD fracture toughness of materials at fracture instability prior to the onset of significant stable tearing crack extension. The value of δ_c^* determined by this test method represents a measure of fracture toughness at instability without significant stable crack extension that is independent of in-plane dimensions. However, there may be a dependence of toughness on thickness (length of crack front).

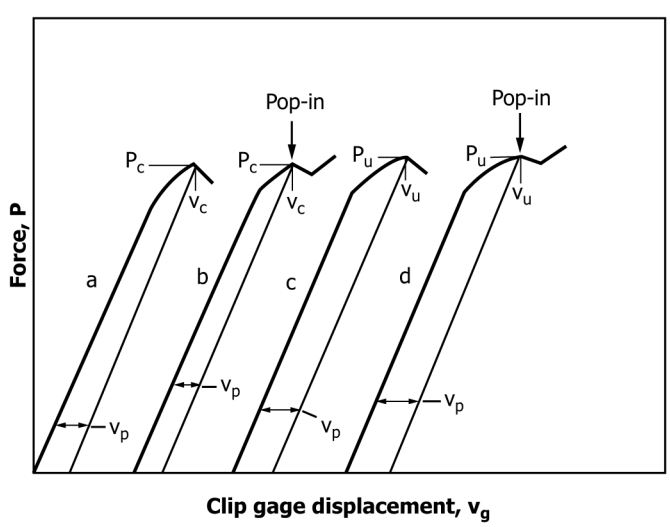

NOTE 1—Construction lines drawn parallel to the elastic loading slope to give v_p, the plastic component of total displacement, v_g.
NOTE 2—In curves b and d, the behavior after pop-in is a function of machine/specimen compliance, instrument response, and so forth.

FIG. 1 Types of Force versus Clip gage Displacement Records

AVA Documents
Document Sharing Hub

Full document details: ASTM E1820-24

3.2.6 *dial energy, KV [FL]*—absorbed energy as indicated by the impact machine encoder or dial indicator, as applicable.

3.2.7 *dynamic stress intensity factor,* K_{Jd}—The dynamic equivalent of the stress intensity factor K_J, calculated from J using the equation specified in this test method.

3.2.8 *effective thickness,* B_e *[L] , n*—for side-grooved specimens $B_e = B - (B - B_N)^2/B$.

3.2.8.1 *Discussion*—This is used for the elastic unloading compliance measurement of crack size.

3.2.9 *effective yield strength,* σ_Y *[FL*$^{-2}$*], n*—an assumed value of uniaxial yield strength that represents the influence of plastic yielding upon fracture test parameters.

3.2.9.1 *Discussion*—It is calculated as the average of the 0.2 % offset yield strength σ_{YS}, and the ultimate tensile strength, σ_{TS} as follows:

$$\sigma_Y = \frac{\sigma_{YS} + \sigma_{TS}}{2} \tag{1}$$

3.2.9.2 *Discussion*—In estimating σ_Y, influences of testing conditions, such as loading rate and temperature, should be considered.

3.2.9.3 *Discussion*—The dynamic effective yield strength, σ_{Yd}, is the dynamic equivalent of the effective yield strength.

3.2.10 *general yield force,* P_{gy} *[F]*—in an instrumented impact test, applied force corresponding to general yielding of the specimen ligament. It corresponds to F_{gy}, as used in Test Method E2298.

3.2.11 *J-integral, J [FL*$^{-1}$*], n*—a mathematical expression, a line or surface integral that encloses the crack front from one crack surface to the other, used to characterize the local stress-strain field around the crack front.

3.2.11.1 *Discussion*—The J-integral expression for a two-dimensional crack, in the x-z plane with the crack front parallel to the z-axis, is the line integral as follows:

$$J = \int_\Gamma \left(W dy - \bar{T} \cdot \frac{\partial \bar{u}}{\partial x} ds \right) \tag{2}$$

where:

W	=	loading work per unit volume or, for elastic bodies, strain energy density,
Γ	=	path of the integral, that encloses (that is, contains) the crack tip,
ds	=	increment of the contour path,
$\bar{T}$	=	outward traction vector on ds,
$\bar{u}$	=	displacement vector at ds,
x, y, z	=	rectangular coordinates, and
$\bar{T} \cdot \frac{\partial \bar{u}}{\partial x} ds$	=	rate of work input from the stress field into the area enclosed by Γ.

3.2.11.2 *Discussion*—The value of J obtained from this equation is taken to be path-independent in test specimens commonly used, but in service components (and perhaps in test specimens) caution is needed to adequately consider loading interior to Γ such as from rapid motion of the crack or the service component, and from residual or thermal stress.

3.2.11.3 *Discussion*—In elastic (linear or nonlinear) solids, the J-integral equals the crack-extension force, G. (See *crack extension force.*)

3.2.11.4 *Discussion*—In elastic (linear and nonlinear) solids for which the mathematical expression is path independent, the J-integral is equal to the value obtained from two identical bodies with infinitesimally differing crack areas each subject to stress. The parameter J is the difference in work per unit difference in crack area at a fixed value of displacement or, where appropriate, at a fixed value of force (**1**)[5].

3.2.11.5 *Discussion*—The dynamic equivalent of J_c is $J_{cd,X}$, with X = order of magnitude of J-integral rate.

3.2.12 J_c *[FL*$^{-1}$*]* —The property J_c determined by this test method characterizes the fracture toughness of materials at fracture instability prior to the onset of significant stable tearing crack extension. The value of J_c determined by this test method represents a measure of fracture toughness at instability without significant stable crack extension that is independent of in-plane dimensions; however, there may be a dependence of toughness on thickness (length of crack front).

3.2.13 J_u *[FL*$^{-1}$*]*—The quantity J_u determined by this test method measures fracture instability after the onset of significant stable tearing crack extension. It may be size-dependent and a function of test specimen geometry. It can be useful to define limits on ductile fracture behavior.

3.2.13.1 *Discussion*—The dynamic equivalent of J_u is $J_{ud,X}$, with X = order of magnitude of J-integral rate.

3.2.14 *J-integral rate,* $\dot{J}$ $[FL^{-1}T^{-1}]$—derivative of J with respect to time.

3.2.15 *machine capacity, MC [FL]*—maximum available energy of the impact testing machine.

3.2.16 *maximum force,* P_{max} *[F]*—in an instrumented impact test, maximum value of applied force. It corresponds to F_m, as used in Test Method E2298.

3.2.17 *net thickness,* B_N *[L], n*—distance between the roots of the side grooves in side-grooved specimens.

3.2.18 *original crack size,* a_o *[L] , n*—the physical crack size at the start of testing.

3.2.18.1 *Discussion*—In this test method, a_{oq} is used to denote original crack size estimated from compliance.

3.2.19 *original remaining ligament,* b_o *[L], n*—distance from the original crack front to the back edge of the specimen, that is ($b_o = W - a_o$).

3.2.20 *physical crack size,* a_p*[L] , n*—the distance from a reference plane to the observed crack front. This distance may represent an average of several measurements along the crack front. The reference plane depends on the specimen form, and it is normally taken to be either the boundary, or a plane containing either the load-line or the centerline of a specimen or plate. The reference plane is defined prior to specimen deformation.

3.2.21 *plane-strain fracture toughness,* J_{Ic} *[FL*$^{-1}$*],* K_{JIc} *[FL*$^{-3/2}$*] , n*—the crack-extension resistance under conditions of crack-tip plane-strain.

3.2.21.1 *Discussion*—For example, in Mode I for slow rates of loading and substantial plastic deformation, plane-strain fracture toughness is the value of the J-integral designated J_{Ic}

[5] The boldface numbers in parentheses refer to the list of references at the end of this standard.

AVA Documents
Document Sharing Hub

Full document details: ASTM E1820-24

$[FL^{-1}]$ as measured using the operational procedure (and satisfying all of the qualification requirements) specified in this test method, that provides for the measurement of crack-extension resistance near the onset of stable crack extension.

3.2.21.2 *Discussion*—For example, in Mode I for slow rates of loading, plane-strain fracture toughness is the value of the stress intensity designated K_{JIc} calculated from J_{Ic} using the equation (and satisfying all of the qualification requirements) specified in this test method, that provides for the measurement of crack-extension resistance near the onset of stable crack extension under dominant elastic conditions (**2**).

3.2.21.3 *Discussion*—The dynamic equivalent of J_{Ic} is $J_{Icd,X}$, with X = order of magnitude of J-integral rate.

3.2.22 *pop-in, n*—a discontinuity in the force versus clip gage displacement record. The record of a pop-in shows a sudden increase in displacement and, generally a decrease in force. Subsequently, the displacement and force increase to above their respective values at pop-in.

3.2.23 *R-curve or J-R curve, n*—a plot of crack extension resistance as a function of stable crack extension, Δa_p or Δa_e.

3.2.23.1 *Discussion*—In this test method, the *J-R* curve is a plot of the far-field *J*-integral versus the physical crack extension, Δa_p. It is recognized that the far-field value of *J* may not represent the stress-strain field local to a growing crack.

3.2.24 *remaining ligament, b [L], n*—distance from the physical crack front to the back edge of the specimen, that is ($b = W - a_p$).

3.2.25 *specimen center of pin hole distance, H* [L], n*—the distance between the center of the pin holes on a pin-loaded specimen.

3.2.26 *specimen gage length, d [L], n*—the distance between the points of displacement measure (for example, clip gage, gage length).

3.2.27 *specimen span, S [L], n*—the distance between specimen supports.

3.2.28 *specimen thickness, B [L], n*—the distance between the parallel sides of a test specimen.

3.2.28.1 *Discussion*—For side-grooved specimens, the net thickness, B_N, is the distance between the roots of the side grooves.

3.2.29 *specimen width, W [L], n*—a physical dimension on a test specimen measured from a reference position such as the front edge in a bend specimen or the load-line in the compact specimen to the back edge of the specimen.

3.2.30 *stable crack extension [L], n*—a displacement-controlled crack extension beyond the stretch-zone width (see 3.2.34). The extension stops when the applied displacement is held constant.

3.2.31 *strain rate,* $\dot{\varepsilon}$—derivative of strain ε with respect to time.

3.2.32 *stress-intensity factor,* K, K_1, K_2, K_3, K_I, K_{II}, K_{III} $[FL^{-3/2}]$, *n*—the magnitude of the ideal-crack-tip stress field (stress-field singularity) for a particular mode in a homogeneous, linear-elastic body.

3.2.32.1 *Discussion*—Values of *K* for the Modes 1, 2, and 3 are given by the following equations:

$$K_1 = \lim_{r\to 0}\left[\sigma_{yy}(2\pi r)^{1/2}\right] \quad (3)$$

$$K_2 = \lim_{r\to 0}\left[\tau_{xy}(2\pi r)^{1/2}\right] \quad (4)$$

$$K_3 = \lim_{r\to 0}\left[\tau_{yz}(2\pi r)^{1/2}\right] \quad (5)$$

where r = distance directly forward from the crack tip to a location where the significant stress is calculated.

3.2.32.2 *Discussion*—In this test method, Mode 1 or Mode I is assumed. See Terminology E1823 for definition of mode.

3.2.33 *stress-intensity factor rate,* $\dot{K}$ $[FL^{-3/2}T^{-1}]$—derivative of *K* with respect to time.

3.2.34 *stretch-zone width, SZW [L], n*—the length of crack extension that occurs during crack-tip blunting, for example, prior to the onset of unstable brittle crack extension, pop-in, or slow stable crack extension. The SZW is in the same plane as the original (unloaded) fatigue precrack and refers to an extension beyond the original crack size.

3.2.35 *time to fracture,* t_f *[T]*—time corresponding to specimen fracture.

3.2.36 *unstable crack extension [L], n*—an abrupt crack extension that occurs with or without prior stable crack extension in a standard test specimen under crosshead or clip gage displacement control.

3.3 *Symbols:*

3.3.1 t_i *[T]*—time corresponding to the onset of crack propagation.

3.3.2 v_0 $[LT^{-1}]$—in an instrumented impact test, striker velocity at impact.

3.3.3 W_m *[FL]*—in an instrumented impact test, absorbed energy at maximum force.

3.3.4 W_t *[FL]*—in an instrumented impact test, total absorbed energy calculated from the complete force/displacement test record.

3.3.5 W_0 *[FL]*—in an instrumented impact test, available impact energy.

4. Summary of Test Method

4.1 The objective of this test method is to load a fatigue precracked test specimen to induce either or both of the following responses (*1*) unstable crack extension, including significant pop-in, referred to as "fracture instability" in this test method; (*2*) stable crack extension, referred to as "stable tearing" in this test method. Fracture instability results in a single point-value of fracture toughness determined at the point of instability. Stable tearing results in a continuous fracture toughness versus crack-extension relationship (*R*-curve) from which significant point-values may be determined. Stable tearing interrupted by fracture instability results in an *R*-curve up to the point of instability.

4.2 This test method requires continuous measurement of force versus load-line displacement or crack mouth opening displacement, or both. If any stable tearing response occurs, then an *R*-curve is developed and the amount of slow-stable crack extension shall be measured.

AVA Documents
Document Sharing Hub

Full document details: ASTM E1820-24

4.3 Two alternative procedures for measuring crack extension are presented, the basic procedure and the resistance curve procedure. The basic procedure involves physical marking of the crack advance and multiple specimens used to develop a plot from which a single point initiation toughness value can be evaluated. The resistance curve procedure is an elastic-compliance method where multiple points are determined from a single specimen. In the latter case, high precision of signal resolution is required. These data can also be used to develop an *R*-curve. Other procedures for measuring crack extension are allowed.

4.4 The commonality of instrumentation and recommended testing procedure contained herein permits the application of data to more than one method of evaluating fracture toughness. Annex A4 and Annex A6 – Annex A11 define the various data treatment options that are available, and these should be reviewed to optimize data transferability.

4.5 Data that are generated following the procedures and guidelines contained in this test method are labeled qualified data. Data that meet the size criteria in Annex A4 and Annex A6 – Annex A11 are insensitive to in-plane dimensions.

4.6 Supplementary information about the background of this test method and rationale for many of the technical requirements of this test method are contained in (**3**). The formulas presented in this test method are applicable over the range of crack size and specimen sizes within the scope of this test method.

5. Significance and Use

5.1 Assuming the presence of a preexisting, sharp, fatigue crack, the material fracture toughness values identified by this test method characterize its resistance to: *(1)* fracture of a stationary crack, *(2)* fracture after some stable tearing, *(3)* stable tearing onset, and *(4)* sustained stable tearing. This test method is particularly useful when the material response cannot be anticipated before the test. Application of procedures in Test Method E1921 is recommended for testing ferritic steels that undergo cleavage fracture in the ductile-to-brittle transition.

5.1.1 These fracture toughness values may serve as a basis for material comparison, selection, and quality assurance. Fracture toughness can be used to rank materials within a similar yield strength range.

5.1.2 These fracture toughness values may serve as a basis for structural flaw tolerance assessment. Awareness of differences that may exist between laboratory test and field conditions is required to make proper flaw tolerance assessment.

5.2 The following cautionary statements are based on some observations.

5.2.1 Particular care must be exercised in applying to structural flaw tolerance assessment the fracture toughness value associated with fracture after some stable tearing has occurred. This response is characteristic of ferritic steel in the transition regime. This response is especially sensitive to material inhomogeneity and to constraint variations that may be induced by planar geometry, thickness differences, mode of loading, and structural details.

5.2.2 The *J-R* curve from bend-type specimens recommended by this test method (SE(B), C(T), and DC(T)) has been observed to be conservative with respect to results from tensile loading configurations.

5.2.3 The values of δ_c, δ_u, J_c, and J_u may be affected by specimen dimensions.

6. Apparatus

6.1 Apparatus is required for measurement of applied force, load-line displacement, and crack-mouth opening displacement. Force versus load-line displacement and force versus crack-mouth opening displacement may be recorded digitally for processing by computer or autographically with an *x-y* plotter. Test fixtures for each specimen type are described in the applicable Annex.

6.2 *Displacement Gages:*

6.2.1 Displacement measurements are needed for the following purposes: to evaluate *J* from the area under the force versus load-line displacement record, CTOD from the force versus crack-mouth opening displacement record and, for the elastic compliance method, to infer crack extension, Δa_p, from elastic compliance calculations.

6.2.2 The recommended displacement gage has a working range of not more than twice the displacement expected during the test. When the expected displacement is less than 3.75 mm (0.15 in.), the gage recommended in Fig. 2 may be used. When a greater working range is needed, an enlarged gage such as the one shown in Fig. 3 is recommended. Accuracy shall be within ±1 % of the full working range. In calibration, the maximum deviation of the individual data points from a fit (linear or curve) to the data shall be less than ±0.2 % of the working range of the gage when using the elastic compliance method and ±1 % otherwise. Knife edges are required for seating the gage. Parallel alignment of the knife edges shall be maintained to within 1°. Direct methods for measuring load-line displacement are described in Refs (**3-6**).

6.2.2.1 *Gage Attachment Methods*—The specimen shall be provided with a pair of accurately machined knife edges that support the gage arms and serve as the displacement reference points. These knife edges can be machined integral with the specimen or they may be attached separately. Experience has shown that razor blades serve as effective attachable knife edges. The knife edges shall be positively attached to the specimen to prevent shifting of the knife edges during the test method. Experience has shown that machine screws or spot welds are satisfactory attachment methods.

6.2.3 For the elastic compliance method, the recommended signal resolution for displacement should be at least 1 part in 32 000 of the transducer signal range, and signal stability should be ±4 parts in 32 000 of the transducer signal range measured over a 10-min period. Signal noise should be less than ±2 parts in 32 000 of the transducer signal range.

6.2.4 Gages other than those recommended in 6.2.2 are permissible if the required accuracy and precision can be met or exceeded.

6.3 *Force Transducers:*

6.3.1 Testing is performed in a testing machine conforming to the requirements of Practices E4. Applied loads may be

AVA Documents
Document Sharing Hub

Full document details: ASTM E1820-24

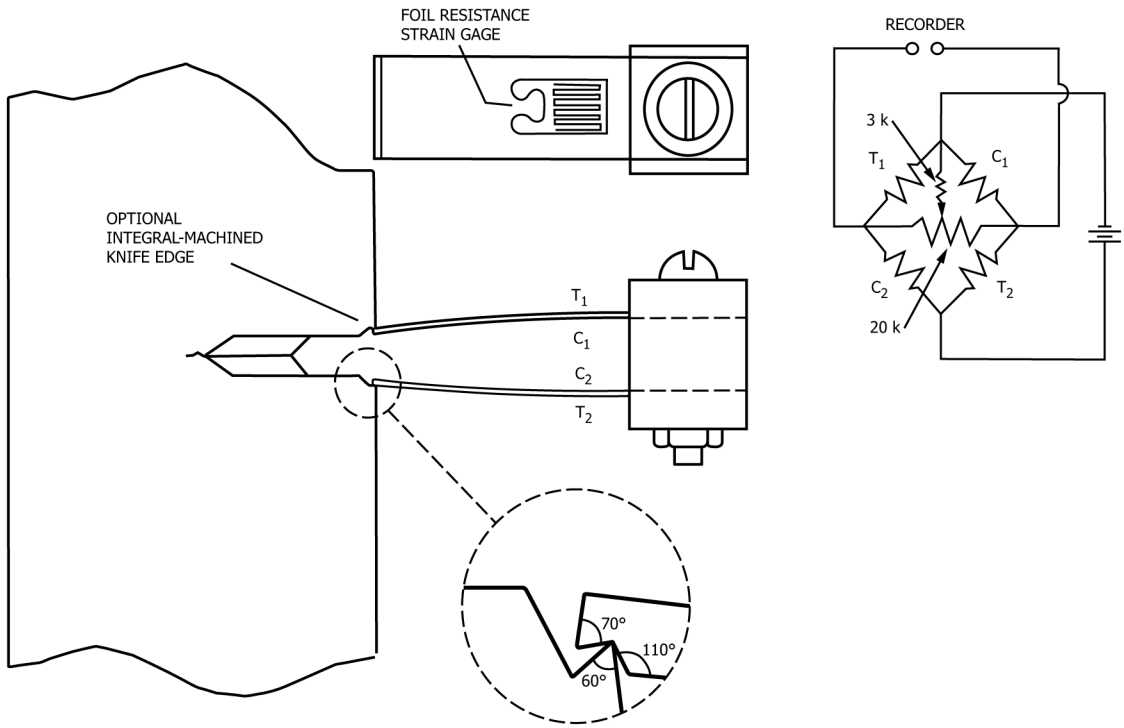

FIG. 2 Double-Cantilever Clip-In Displacement gage Mounted by Means of Integral Knife Edges

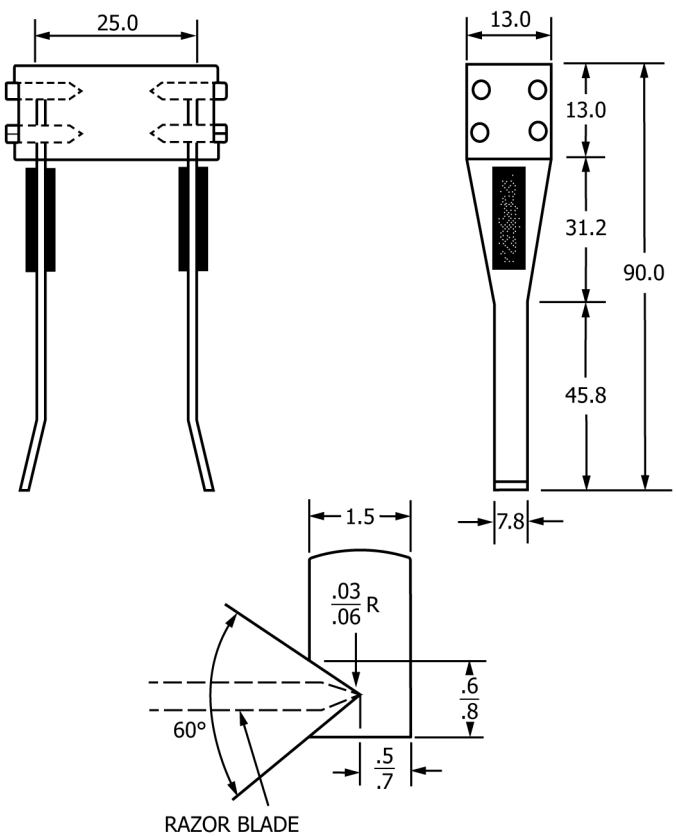

NOTE 1—All dimensions are in millimeters.

FIG. 3 Clip Gage Design for 8.0 mm (0.3 in.) and More Working Range

measured by any force transducer capable of being recorded continuously. Accuracy of force measurements shall be within ±1 % of the working range. In calibration, the maximum deviation of individual data points from a fit to the data shall be less than ±0.2 % of the calibrated range of the transducer when using elastic compliance, and ±1 % otherwise.

6.3.2 For the elastic compliance method, the signal resolution on force should be at least 1 part in 4000 of the transducer signal range and signal stability should be ±4 parts in 4000 of the transducer signal range measured over a 10-min period. Recommended maximum signal noise should be less than ±2 parts in 4000 of the transducer signal range.

6.4 *System Verification*—It is recommended that the performance of the force and displacement measuring systems be verified before beginning a series of continuous tests. Calibration accuracy of displacement transducers shall be verified with due consideration for the temperature and environment of the test. Force calibrations shall be conducted periodically and documented in accordance with the latest revision of Practices E4.

6.5 *Fixtures:*

6.5.1 *Bend-Test Fixture*—The general principles of the bend-test fixture are illustrated in Fig. 4. This fixture is designed to minimize frictional effects by allowing the support rollers to rotate and move apart slightly as the specimen is loaded, thus permitting rolling contact. Thus, the support rollers are allowed limited motion along plane surfaces parallel to the notched side of the specimen, but are initially positively positioned against stops that set the span length and are held in place by low-tension springs (such as rubber bands). Fixtures and rolls shall be made of high hardness (greater than 40 HRC) steels.

AVA Documents
Document Sharing Hub

Full document details: ASTM E1820-24

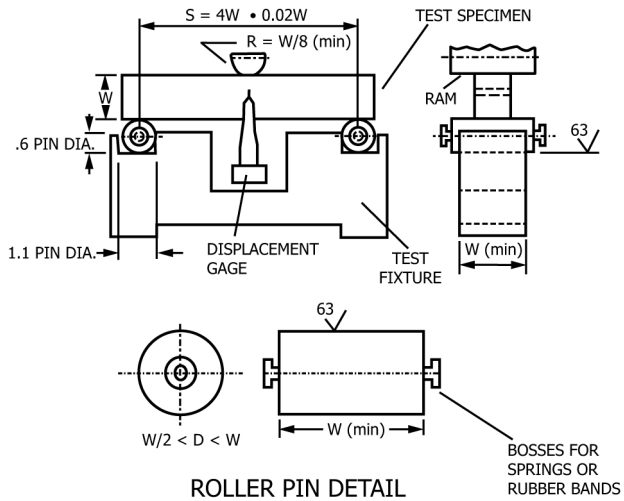

FIG. 4 Bend Test Fixture Design

6.5.2 *Tension Testing Clevis:*

6.5.2.1 A loading clevis suitable for testing compact specimens is shown in Fig. 5. Both ends of the specimen are held in such a clevis and loaded through pins, in order to allow rotation of the specimen during testing. In order to provide rolling contact between the loading pins and the clevis holes, these holes are provided with small flats on the loading surfaces. Other clevis designs may be used if it can be demonstrated that they will accomplish the same result as the design shown. Clevises and pins should be fabricated from steels of sufficient strength (greater than 40 HRC) to elastically resist indentation of the clevises or pins.

6.5.2.2 The critical tolerances and suggested proportions of the clevis and pins are given in Fig. 5. These proportions are based on specimens having $W/B = 2$ for $B > 12.7$ mm (0.5 in.) and $W/B = 4$ for $B \leq 12.7$ mm. If a 1930-MPa (280 000-psi) yield strength maraging steel is used for the clevis and pins, adequate strength will be obtained. If lower-strength grip material is used, or if substantially larger specimens are required at a given σ_{YS}/E ratio, then heavier grips will be required. As indicated in Fig. 5 the clevis corners may be cut off sufficiently to accommodate seating of the clip gage in specimens less than 9.5 mm (0.375 in.) thick.

6.5.2.3 Careful attention should be given to achieving good alignment through careful machining of all auxiliary gripping fixtures.

7. Specimen Size, Configuration, and Preparation

7.1 *Specimen Configurations*—The configurations of the standard specimens are shown in Annex A1 – Annex A3.

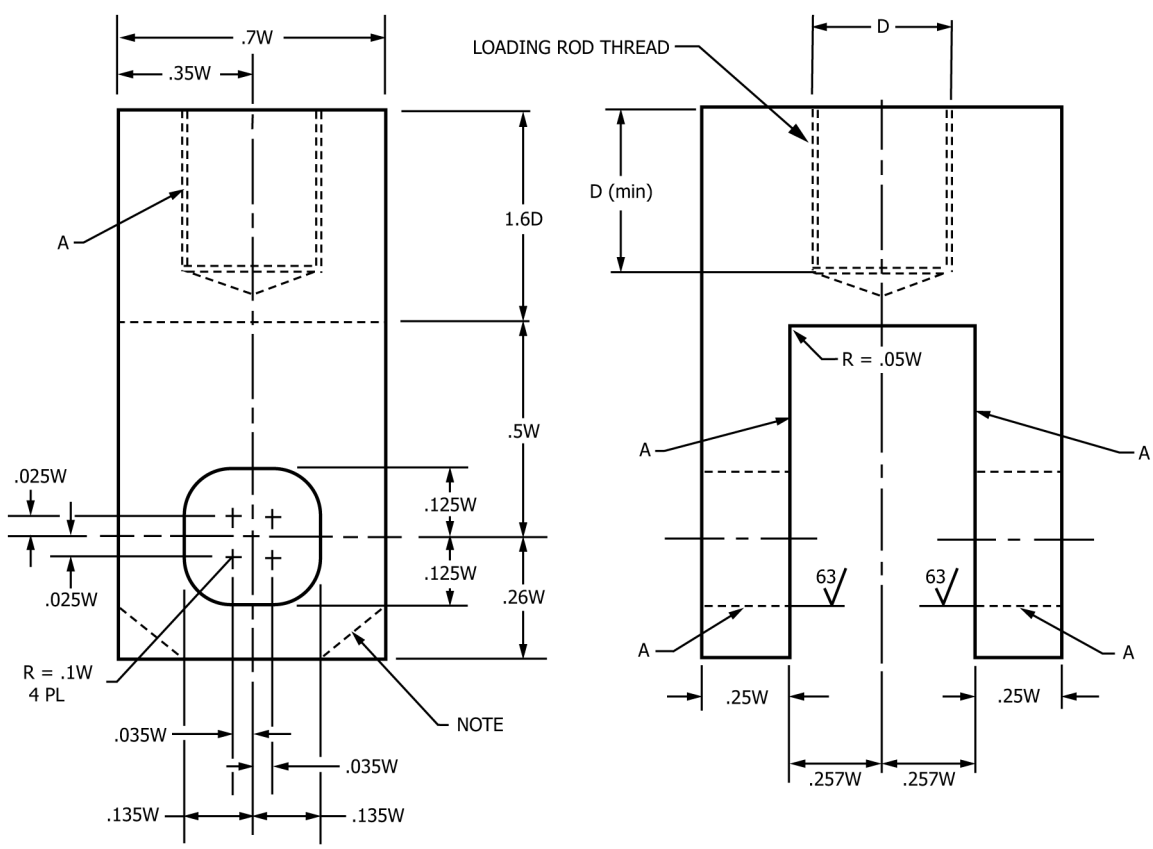

A - SURFACES MUST BE FLAT, IN-LINE AND PERPENDICULAR, AS APPLICABLE, TO WITHIN 0.002 in. T. I. R. (0.05 mm)

NOTE 1—Corners may be removed as necessary to accommodate the clip gage.

FIG. 5 Tension Testing Clevis Design

Documents
Document Sharing Hub
Full document details: ASTM E1820-24

7.2 *Crack Plane Orientation*—The crack plane orientation shall be considered in preparing the test specimen. This is discussed in Terminology E1823.

7.3 *Alternative Specimens*—In certain cases, it may be desirable to use specimens having *W*/*B* ratios other than two. Recommended alternative proportions are $1 \leq W/B \leq 4$ for the single-edge bend specimen and $2 \leq W/B \leq 4$ for the compact and disk-shaped compact specimens. However, larger *W*/*B* ratios may be used, as long as specimen buckling and slant fracture are avoided. Values of *W*/*B* lower than 1 for SE(B) specimens or lower than 2 for C(T) or DC(T) shall not be used.

NOTE 3—In case of specimen buckling or transversely slanted fracture surfaces due to through-thickness shear, the equations provided in this test method to calculate *J* and elastic compliance become inaccurate.

7.4 *Specimen Precracking*—All specimens shall be precracked in fatigue. Experience has shown that it is impractical to obtain a reproducibly sharp, narrow machined notch that will simulate a natural crack well enough to provide a satisfactory fracture toughness test result. The most effective artifice for this purpose is a narrow notch from which extends a comparatively short fatigue crack, called the precrack. (A fatigue precrack is produced by cyclically loading the notched specimen for a number of cycles usually between about 10^4 and 10^6 depending on specimen size, notch preparation, and stress intensity level.) The dimensions of the notch and the precrack, and the sharpness of the precrack shall meet certain conditions that can be readily met with most engineering materials since the fatigue cracking process can be closely controlled when careful attention is given to the known contributory factors. However, there are some materials that are too brittle to be fatigue-cracked since they fracture as soon as the fatigue crack initiates; these are outside the scope of the present test method.

7.4.1 *Fatigue Crack Starter Notch*—Three forms of fatigue crack starter notches are shown in Fig. 6. To facilitate fatigue cracking at low stress intensity factor levels, the root radius for a straight-through slot terminating in a *V*-notch should be 0.08 mm (0.003 in.) or less. If a chevron form of notch is used, the root radius may be 0.25 mm (0.010 in.) or less. In the case of a slot tipped with a hole it will be necessary to provide a sharp stress raiser at the end of the hole. The combination of starter notch and fatigue precrack shall conform to the requirements of Fig. 7.

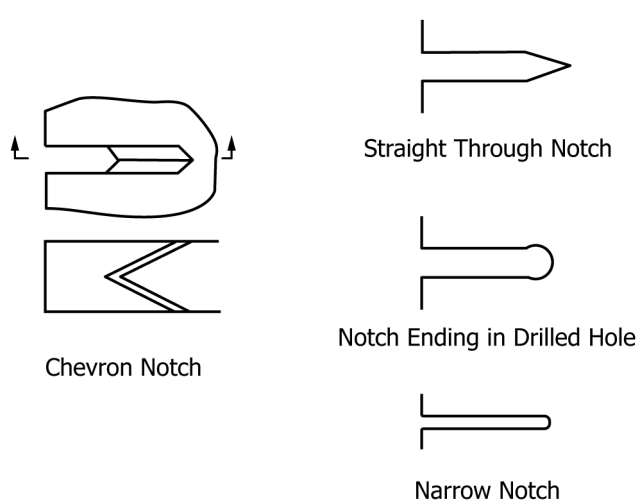

FIG. 6 Fatigue Crack Starter Notch Configurations

7.4.2 *Fatigue Crack Size*—The crack size (total average length of the crack starter configuration plus the fatigue crack) shall be between 0.45 *W* and 0.70 *W* for *J* and δ determination.

7.4.3 *Equipment*—The equipment for fatigue cracking should be such that the stress distribution is uniform through the specimen thickness; otherwise the crack will not grow uniformly. The stress distribution should also be symmetrical about the plane of the prospective crack; otherwise the crack may deviate from that plane and the test result can be significantly affected. The *K* calibration for the specimen, if it is different from the one given in this test method, shall be known with an uncertainty of less than 5 %. Fixtures used for precracking should be machined with the same tolerances as those used for testing.

7.4.4 *Fatigue Loading Requirements*—Allowable fatigue force values are limited to keep the maximum stress intensity applied during precracking, K_{MAX}, well below the material fracture toughness measured during the subsequent test. The fatigue precracking shall be conducted with the specimen fully heat-treated to the condition in which it is to be tested. No intermediate treatments between precracking and testing are allowed. There are several ways of promoting early crack initiation: *(1)* by providing a very sharp notch tip, *(2)* by using a chevron notch (Fig. 6), *(3)* by statically preloading the specimen in such a way that the notch tip is compressed in a direction normal to the intended crack plane (to a force not to exceed P_m as defined in Annex A1 – Annex A3), and *(4)* by using a negative fatigue force ratio; for a given maximum fatigue force, the more negative the force ratio, the earlier crack initiation is likely to occur. The peak compressive force shall not exceed P_m as defined in Annex A1 – Annex A3.

7.4.5 *Fatigue Precracking Procedure*—Fatigue precracking can be conducted under either force control or displacement control. If the force cycle is maintained constant, the maximum *K* and the *K* range will increase with crack size; if the displacement cycle is maintained constant, the reverse will happen. The initial value of the maximum fatigue force should be less than P_m. The specimen shall be accurately located in the loading fixture. Fatigue cycling is then begun, usually with a sinusoidal waveform and near to the highest practical frequency. There is no known marked frequency effect on fatigue precrack formation up to at least 100 Hz in the absence of adverse environments. The specimen should be carefully monitored until crack initiation is observed on one side. If crack initiation is not observed on the other side before appreciable growth is observed on the first, then fatigue cycling should be stopped to try to determine the cause and find a remedy for the unsymmetrical behavior. Sometimes, simply turning the specimen around in relation to the fixture will solve the problem.

7.4.5.1 The fatigue precrack extension from the machined notch at the nine measurement points along the crack front (see 8.5.3) shall not be less than *0.5h* where *h* is the notch height, or 0.25 mm, whichever is larger, and the combination of precrack size and sharpened notch length shall not exceed than

AVA Documents
Document Sharing Hub

Full document details: ASTM E1820-24

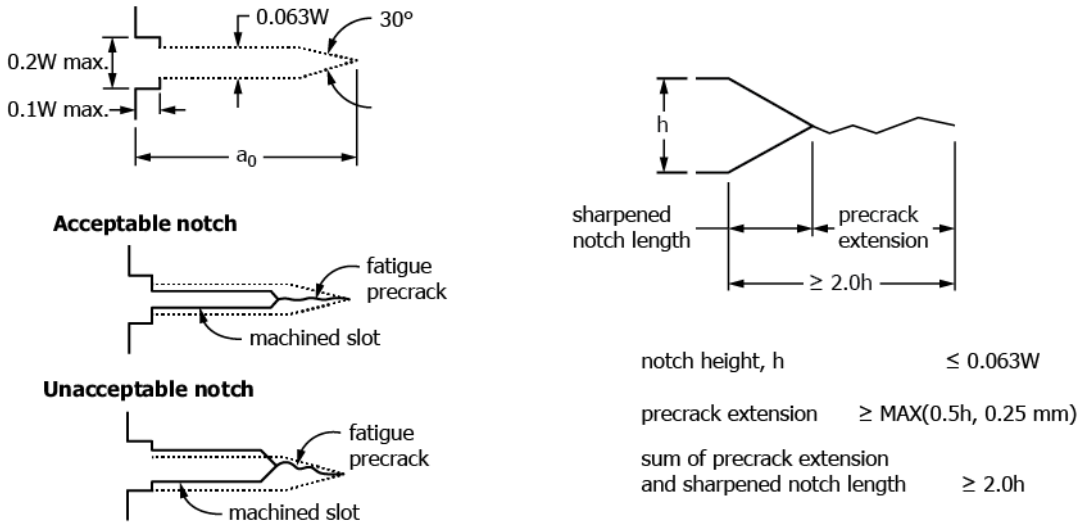

NOTE 1—The crack-starter notch shall be centered between the top and bottom specimen edges within 0.005 W.

FIG. 7 Envelope of Fatigue Crack and Crack Starter Notches

2.0h. Precracking shall be accomplished in at least two steps. For the first step the maximum stress intensity factor applied to the specimen shall be limited by:

$$K_{MAX} = \left(\frac{\sigma^f_{YS}}{\sigma^T_{YS}}\right)\left(0.063\sigma^f_{YS}\,\text{MPa}\sqrt{\text{m}}\right) \quad (6)$$

or

$$K_{MAX} = \left(\frac{\sigma^f_{YS}}{\sigma^T_{YS}}\right)\left(0.4\sigma^f_{YS}\,\text{ksi}\sqrt{\text{in.}}\right)$$

where:

$\sigma_{YS}{}^f$ and $\sigma_{YS}{}^T$ = the material yield stresses at the fatigue precrack and test temperatures respectively.

7.4.5.2 It is generally most effective to use $R = P_{MIN}/P_{MAX} = 0.1$. The accuracy of the maximum force values shall be known within ±5 %. Precracking should be conducted at as low a K_{MAX} as practical. For some aluminum alloys and high strength steels the above K_{MAX} relationship can give very high precracking forces. This is especially true if precracking and testing are conducted at the same temperature. It is suggested that the user start with approximately 0.7 K_{MAX} given by the above relationship, and if the precrack does not grow after 10^5 cycles the loading can be incrementally increased until the crack begins to extend. For the second precracking step, which shall include at least the final 50 % of the fatigue precrack, the maximum stress intensity factor that may be applied to the specimen shall be given by:

$$K_{MAX} = 0.6\frac{\sigma^f_{YS}}{\sigma^T_{YS}}K_F \quad (7)$$

where:

K_F = K_{JQ}, K_{JQc} or K_{JQu} depending on the result of the test, and K_F is calculated from the corresponding J_F using the relationship that:

$$K_F = \sqrt{\frac{EJ_F}{(1-\nu^2)}} \quad (8)$$

7.4.5.3 To transition between steps, intermediate levels of force shedding can be used if desired.

7.5 *Side Grooves*—Side grooves are highly recommended when the compliance method of crack size prediction is used. The specimen may also need side grooves to ensure a straight crack front as specified in Annex A4 – Annex A11. The total thickness reduction shall not exceed 0.25*B*. A total reduction of 0.20*B* has been found to work well for many materials. Any included angle of side groove less than 90° is allowed. Root radius shall be 0.5 mm ± 0.2 mm (0.02 in. ± 0.01 in.). In order to produce nearly straight fatigue precrack fronts, the precracking should be performed prior to the side-grooving operation. B_N is the minimum thickness measured at the roots of the side grooves. The root of the side groove should be located along the specimen centerline.

8. Procedure

8.1 *Objective and Overview:*

8.1.1 The overall objective of the test method is to develop a force-displacement record that can be used to evaluate *K, J,* or CTOD. Two procedures can be used: *(1)* a basic procedure directed toward evaluation of a single *K, J,* or CTOD value without the use of crack extension measurement equipment, or *(2)* a procedure directed toward evaluation of a complete fracture toughness resistance curve using crack extension measurement equipment. This also includes the evaluation of single-point toughness values.

8.1.2 The basic procedure utilizes a force versus displacement plot and is directed toward obtaining a single fracture toughness value such as J_c, K_{JIc}, or δ_c. Optical crack measurements are utilized to obtain both the initial and final physical crack sizes in this procedure. Multiple specimens can be used to evaluate *J* at the initiation of ductile cracking, J_{Ic} or δ_{Ic}.

8.1.3 The resistance curve procedure utilizes an elastic unloading procedure or equivalent procedure to obtain a *J*- or CTOD-based resistance curve from a single specimen. Crack size is measured from compliance in this procedure and

AVA Documents
Document Sharing Hub

Full document details: ASTM E1820-24

verified by post-test optical crack size measurements. An alternative procedure using the normalization method is presented in Annex A15: Normalization Data Reduction Technique.

8.1.4 Three or more determinations of the fracture toughness parameter are suggested to ascertain the effects of material and test system variability. If fracture occurs by cleavage of ferritic steel, the testing and analysis procedures of Test Method E1921 are recommended.

8.2 *System and Specimen Preparation:*

8.2.1 *Specimen Measurement*—Measure the dimensions, B_N, B, W, H^*, and d to the nearest 0.050 mm (0.002 in.) or 0.5 %, whichever is larger.

8.2.2 *Specimen Temperature:*

8.2.2.1 The temperature of the specimen shall be stable and uniform during the test. Hold the specimen at test temperature ±3 °C for ½ h/25 mm of specimen thickness.

8.2.2.2 Measure the temperature of the specimen during the test to an accuracy of ±3 °C, where the temperature is measured on the specimen surface within $W/4$ from the crack tip. (See Test Methods E21 for suggestions on temperature measurement.)

8.2.2.3 For the duration of the test, the difference between the indicated temperature and the nominal test temperature shall not exceed ±3 °C.

8.2.2.4 The term "indicated temperature" means the temperature that is indicated by the temperature measuring device using good-quality pyrometric practice.

NOTE 4—It is recognized that specimen temperature may vary more than the indicated temperature. The permissible indicated temperature variations in 8.2.2.3 are not to be construed as minimizing the importance of good pyrometric practice and precise temperature control. All laboratories should keep both indicated and specimen temperature variations as small as practicable. It is well recognized, in view of the dependency of fracture toughness of materials on temperature, that close temperature control is necessary. The limits prescribed represent ranges that are common practice.

8.3 *Alignment:*

8.3.1 *Bend Testing*—Set up the bend test fixture so that the line of action of the applied force passes midway between the support roll centers within ±1 % of the distance between the centers. Measure the span to within ±0.5 % of the nominal length. Locate the specimen so that the crack tip is midway between the rolls to within 1 % of the span and square to roll axes within ±2°.

8.3.1.1 When the load-line displacement is referenced from the loading jig, there is potential for introduction of error from two sources. They are the elastic compression of the fixture as the force increases and indentation of the specimen at the loading points. Direct methods for load-line displacement measurement are described in Refs (**4-7**). If a remote transducer is used for load-line displacement measurement, take care to exclude the elastic displacement of the load-train measurement and brinelling displacements at the load points (**8**).

8.3.2 *Compact Testing*—Loading pin friction and eccentricity of loading can lead to errors in fracture toughness determination. The centerline of the upper and lower loading rods should be coincident within 0.25 mm (0.01 in.). Center the specimen with respect to the clevis opening within 0.76 mm (0.03 in.). Seat the displacement gage in the knife edges firmly by wiggling the gage lightly.

8.4 *Basic Procedure*—Load all specimens under displacement gage or machine crosshead or actuator displacement control. If a loading rate that exceeds that specified here is desired, please refer to Annex A14 ("Special Requirements for Rapid-Load J-Integral Fracture Toughness Testing").

8.4.1 The basic procedure involves loading a specimen to a selected displacement level and determining the amount of crack extension that occurred during loading.

8.4.2 Load specimens at a constant rate such that the time taken to reach the force P_m, as defined in Annex A1 – Annex A3, lies between 0.1 and 3 min.

8.4.3 If the test ends by fracture instability, measure the initial crack size and any ductile crack extension by the procedure in 9. Ductile crack extension may be difficult to distinguish but should be defined on one side by the fatigue precrack and on the other by the brittle region. Proceed to Section 9 to evaluate fracture toughness in terms of K, J, or CTOD.

8.4.4 If stable tearing occurs, test additional specimens to evaluate an initiation value of the toughness. Use the procedure in 8.5 to evaluate the amount of stable tearing that has occurred and thus determine the displacement levels needed in the additional tests. Five or more points favorably positioned are required to generate an R curve for evaluating an initiation point. See Annex A9 and Annex A11 to see how points shall be positioned for evaluating an initiation toughness value.

8.5 *Optical Crack Size Measurement:*

8.5.1 After unloading the specimen, mark the crack according to one of the following methods. For steels and titanium alloys, heat tinting at about 300 °C (570 °F) for 30 min works well. For other materials, fatigue cycling can be used. The use of liquid penetrants is not recommended. For both recommended methods, the beginning of stable crack extension is marked by the end of the flat fatigue precracked area. The end of crack extension is marked by the end of heat tint or the beginning of the second flat fatigue area.

8.5.2 Break the specimen to expose the crack, with care taken to minimize additional deformation. Cooling ferritic steel specimens to ensure brittle behavior may be helpful. Cooling nonferritic materials may help to minimize deformation during final fracture.

8.5.3 Along the front of the fatigue crack and the front of the marked region of stable crack extension, measure the size of the original crack and the final physical crack size at nine equally spaced points centered about the specimen centerline and extending to 0.005 W from the root of the side groove or surface of plane-sided specimens. Calculate the original crack size, a_o, and the final physical crack size, a_p, as follows: average the two near-surface measurements, combine the result with the remaining seven crack size measurements and determine the average. Calculate the physical crack extension, $\Delta a_p = a_p - a_o$. The measuring instrument shall have an accuracy of 0.025 mm (0.001 in.).

AVA Documents
Document Sharing Hub

Full document details: ASTM E1820-24

8.5.4 None of the nine measurements of original crack size and final physical crack size may differ by more than $0.1(b_oB_N)^{1/2}$ from the average physical crack size defined in 8.5.3.

8.6 *Resistance Curve Procedure:*

8.6.1 The resistance curve procedure involves using an elastic compliance technique or other technique to obtain the *J* or CTOD resistance curve from a single specimen test. The elastic compliance technique is described here, while the normalization technique is described in Annex A15.

8.6.2 Load the specimens under displacement gage or machine crosshead or actuator displacement control. Load the specimens at a rate such that the time taken to reach the force P_m, as defined in Annex A1 – Annex A3, lies between 0.1 and 3.0 min, not including the time required to preform unload/reload cycles to estimate compliance. The time to perform an unload/reload sequence should be as needed to accurately estimate crack size, but not more than 10 min. If a higher loading rate is desired, please refer to Annex A14 ("Special Requirements for Rapid-Load J-Integral Fracture Toughness Testing").

8.6.3 Take each specimen individually through the following steps:

8.6.3.1 Measure compliance to estimate the original crack size, a_o, using unloading/reloading sequences over a force range of 0.5 to 1.0 times the final maximum precracking force. Estimate a provisional initial crack size, a_{oq}, from at least three unloading/reloading sequences. No individual value shall differ from the mean by more than ±0.002 *W*.

8.6.3.2 Proceed with the test using unload/reload sequences that produce crack extension measurements at intervals prescribed by the applicable data analysis section of Annex A8 or Annex A10. Note that at least eight (Δa, *J*) data points are required before the specimen achieves maximum force. If crack size values change negatively by more than 0.005 a_o (backup), stop the test and check the alignment of the loading train. Crack size values determined at forces lower than the maximum precracking force should be ignored.

8.6.4 For many materials, stress relaxation may occur prior to conducting compliance measurements, causing a time-dependent nonlinearity in the unloading slope. One method that may be used to remedy this effect is to hold the specimen for a period of time until the force becomes stable at a constant displacement prior to initiating the unloading.

8.6.5 The maximum recommended range of unload/reload for crack extension measurement should not exceed either 50 % of P_m, as defined in Annex A1 – Annex A3, or 50 % of the current force, whichever is smaller.

8.6.6 Experience has shown that satisfactory results may be obtained with unloads of 10 %-20 % of P_m. A consistent force range should be used for all unloadings in a test.

8.6.7 A minimum of twenty (crack opening displacement, force) data points, uniformly spaced over the unload interval, are required to estimate the specimen compliance. The uncertainty of the compliance estimates can be improved by increasing the number of data points used in the regression analysis. It is recommended that forty or more data points be used in the regression analysis of each unload (reload).

8.6.8 After completing the final unloading cycle, return the force to zero without additional crosshead displacement beyond the then current maximum displacement.

8.6.9 After unloading the specimen, use the procedure in 8.5 to optically measure the crack sizes.

8.7 *Alternative Methods:*

8.7.1 Alternative methods of measuring crack extension, such as the direct current electric potential difference method described in Annex A18, are allowed. Methods shall meet the qualification criteria given in 9.1.5.2 or in the case of the potential difference method, in A18.16.2. If an alternative method is used to obtain J_{Ic}, at least one additional, confirmatory specimen shall be tested at the same test rate and under the same test conditions. From the alternative method the load-line displacement corresponding to a ductile crack extension of 0.5 mm shall be estimated. The additional specimen shall then be loaded to this load-line displacement level, marked, broken open and the ductile crack growth measured. The measured crack extension for the confirmatory specimen shall be 0.5 mm ± 0.25 mm in order for the measured J_{Ic} values to be qualified according to this method.

8.7.2 If displacement measurements are made in a plane other than that containing the load-line, the ability to infer load-line displacement shall be demonstrated using the test material under similar test temperatures and conditions. Inferred load-line displacement values shall be accurate to within ±1 %.

9. Analysis of Results

9.1 *Qualification of Data*—The data shall meet the following requirements to be qualified according to this test method. If the data do not pass these requirements, no fracture toughness measures can be determined in accordance with this test method.

NOTE 5—This section contains the requirements for qualification that are common for all tests. Additional qualification requirements are given with each type of test in the Annexes as well as requirements for determining whether the fracture toughness parameter developed is insensitive to in-plane dimensions.

9.1.1 All requirements on the test equipment in Section 6 shall be met.

9.1.2 All requirements on machining tolerance and precracking in Section 7 shall be met.

9.1.3 All requirements on fixture alignment, test rate, and temperature stability and accuracy in Section 8 shall be met.

9.1.4 The following crack size requirements shall be met in all stable tests. Unstable tests need only meet the original crack size requirement.

9.1.4.1 *Original Crack Size*—None of the nine physical measurements of initial crack size defined in 8.5.3 shall differ by more than $0.1(b_oB_N)^{1/2}$ from the average a_o.

9.1.4.2 *Final Crack Size*—None of the nine physical measurements of final physical crack size, a_p, defined in 8.5.3 shall differ by more than $0.1(b_oB_N)^{1/2}$ from the average a_p. In subsequent tests, the side-groove configuration may be modified within the requirements of 7.5 to facilitate meeting this requirement.

AVA Documents
Document Sharing Hub

Full document details: ASTM E1820-24

9.1.5 The following crack size requirements shall be met in all stable tests using the resistance curve procedure of 8.6.

9.1.5.1 *Crack Extension*—None of the nine physical measurements of crack extension shall be less than 50 % of the average crack extension.

9.1.5.2 *Crack Extension Prediction*—The crack extension, $\Delta a_{predicted}$, predicted from elastic compliance (or other method), at the last unloading shall be compared with the measured physical crack extension, Δa_p. The difference between these shall not exceed 0.15 Δa_p for crack extensions less than 0.2 b_o, and the difference shall not exceed 0.03 b_o thereafter.

9.2 *Fracture Instability*—When the test terminates with fracture instability, evaluate whether the fracture occurred before stable tearing or after stable tearing. The beginning of stable tearing is defined in A6.3 and A7.3. For fracture instability occurring before stable tearing proceed to Annex A6, and Annex A7 to evaluate the toughness values in terms of *K, J*, or CTOD. For fracture instability occurring after stable tearing, proceed to Annex A6, and Annex A7 to evaluate toughness values and then go to 9.3 to evaluate stable tearing.

9.3 *Stable Tearing:*

9.3.1 *Basic Procedure*—When the basic procedure is used, only an initiation toughness can be evaluated. Proceed to Annex A9 and Annex A11 to evaluate initiation toughness values.

9.3.2 *Resistance Curve Procedure*—When the resistance curve procedure is used, refer to Annex A8 and Annex A10 to develop the *R*-curves. Proceed to Annex A9 and Annex A11 to develop initiation values of toughness.

10. Report

10.1 Recommended tables for reporting results are given in Figs. 8 and 9.

10.2 Report the following information for each fracture toughness determination:

10.2.1 Type of test specimen and orientation of test specimen according to Terminology E1823 identification codes,

10.2.2 Material designation (ASTM, AISI, SAE, and so forth), material product form (plate, forging, casting, and so forth), and material yield and tensile strength (at test temperature),

10.2.3 Specimen dimensions (8.2.1), thickness B and B_N, and width W,

10.2.4 Test temperature (8.2.2), loading rate (8.4.2 and 8.6.2), and type of loading control,

10.2.5 Fatigue precracking conditions (7.4), K_{max}, ΔK range, and fatigue precrack size (average),

10.2.6 Load-displacement record and associated calculations (Section 9),

10.2.7 If the loading rate is other than quasi-static, report the applied *dK/dt*,

10.2.8 Original measured crack size, a_o (8.5), original predicted crack size, a_{oq} , final measured crack size, a_p, final predicted crack extension, $\Delta a_{predicted}$, physical crack extension during test, Δa_p, crack front appearance—straightness and planarity, and fracture appearance,

Basic Test Information
Loading Rate, time to P_m = [min]
Test temperature = [°C]

Crack Size Information
Initial measured crack size, a_o = [mm]
Initial predicted crack size, a_{oq} = [mm]
Final measured crack size, a_f = [mm]
Final Δa_p = [mm]
Final $\Delta a_{predicted}$ = [mm]

Analysis of Results
Fracture type = (Fracture instability or stable tearing)

K Based Fracture
K_{Jic} = [MPa-m$^{1/2}$]

J Based Fracture
J_c = [kJ/m^2]
J_{Ic} = [kJ/m^2]
J_u = [kJ/m^2]

δ Based Results
δ_c^* = [mm]
δ_{Ic} = [mm]
δ_c = [mm]
δ_u = [mm]

Final $\Delta a/b$ =
Final J_{max}/σ_{YS} = [mm]

Specimen Information
Type =
Identification =
Orientation =

Basic dimensions
B = [mm]
B_N = [mm]
W = [mm]
h (Notch Height) = [mm]
a_N(Notch Length) = [mm]

Particular dimensions
C(T) H = [mm]
SE(B) S = [mm]
DC(T) D = [mm]

Material
Material designation =
Form =

Tensile Properties
E (Young's modulus) = [MPa]
ν (Poisson's ratio) =
σ_{YS} (Yield Strength) = [MPa]
σ_{TS} (Ultimate Strength) = [MPa]

Precracking Information
Final P_{max} = [N]
Final P_{min} = [N]
P_m = [N]
Final $\Delta K/E$ = [MPa-m$^{1/2}$]
Fatigue temperature = [°C]
Fatigue crack growth information

FIG. 8 Suggested Data Reporting Format

10.2.9 Qualification of fracture toughness measurement (Annex A4 and Annex A6 – Annex A11), based on size requirements, and based on crack extension, and

10.2.10 Qualified values of fracture toughness, including *R*-curve values.

AVA Documents
Document Sharing Hub

Full document details: ASTM E1820-24

Test Information			Specimen ID:				Date
Test Record Information			Operator:				
Event	P [N]	v [mm]	a [mm]	Δa [mm]	K [MPa-m$^{1/2}$]	J [kJ/m^2]	δ [mm]

FIG. 9 Suggested Data Reporting Format

11. Precision and Bias

11.1 *Bias*—There is no accepted "standard" value for any of the fracture toughness criteria employed in this test method. In the absence of such a true value no meaningful statement can be made concerning bias of data.

11.2 *Precision*—The precision of any of the various fracture toughness determinations cited in this test method is a function of the precision and bias of the various measurements of linear dimensions of the specimen and testing fixtures, the precision of the displacement measurement, the bias of the force measurement as well as the bias of the recording devices used to produce the force-displacement record, and the precision of the constructions made on this record. It is not possible to make meaningful statements concerning precision and bias for all these measurements. However, it is possible to derive useful information concerning the precision of fracture toughness measurements in a global sense from interlaboratory test programs. Most of the measures of fracture toughness that can be determined by this procedure have been evaluated by an interlaboratory test program. The J_{Ic} was evaluated in (**9**), the *J-R* curve was evaluated in (**10**), and δ_c was evaluated in a research report.[6] In addition, the overall analysis procedures of this test method were evaluated in an interlaboratory test program. Note that for the evaluation of J_{Ic}, if the slope of the power law regression line, dJ/da, evaluated at the abscissa value Δa_Q is greater than σ_Y, the uncertainty of the J_{Ic} measurement is likely to be much greater than that obtained during the interlaboratory test programs cited. Likewise note that for the evaluation of δ_{Ic} , if the slope of the power law regression line, dδ/da, evaluated at the abscissa value Δa_Q, is greater than 1, the uncertainty of the δ_{Ic} measurement is likely to be much greater than that obtained during the interlaboratory test programs cited.

12. Keywords

12.1 crack initiation; crack-tip opening displacement; CTOD; ductile fracture; elastic-plastic fracture toughness; fracture instability; J-integral; J_{Ic}; K_{Jic}; J_c; δ_c; plane-strain fracture toughness; resistance curve; stable crack growth

[6] Supporting data have been filed at ASTM International Headquarters and may be obtained by requesting Research Report RR:E24-1013.

Documents
Document Sharing Hub
Full document details: ASTM E1820-24

ANNEXES

(Mandatory Information)

A1. SPECIAL REQUIREMENTS FOR TESTING SINGLE EDGE BEND SPECIMENS

NOTE A1.1—Annex A1 – Annex A3 cover specimen information.

A1.1 Specimen

A1.1.1 The standard bend specimen is a single edge-notched and fatigue-cracked beam loaded in three-point bending with a support span, S, equal to four times the width, W. The general proportions of the specimen configuration are shown in Fig. A1.1.

A1.1.2 Recommended alternative specimens can have $1 \leq W/B \leq 4$, with a nominal support span equal to $4W$. Larger W/B ratios may be used, as long as specimen buckling and slant fracture are avoided. W/B ratios lower than 1 shall not be used.

A1.2 Apparatus

A1.2.1 For generally applicable specifications concerning the bend-test fixture and displacement gage see 6.2 and 6.5.1.

A1.3 *Specimen Preparation:*

A1.3.1 For generally applicable specifications concerning specimen configuration and preparation see Section 7.

A1.3.2 All specimens shall be precracked in three-point bending fatigue based upon the force P_m, as follows:

$$P_m = \frac{0.5Bb_o^2\sigma_Y}{S} \tag{A1.1}$$

See 7.4.5 for fatigue precracking requirements.

A1.4 Calculation

A1.4.1 *Calculation of K*—For the bend specimen at a force $P_{(i)}$, calculate K as follows:

$$K_{(i)} = \left[\frac{P_i S}{(BB_N)^{1/2} W^{3/2}}\right] f(a_i/W) \tag{A1.2}$$

where:

$$f\left(\frac{a_i}{W}\right) = \frac{3\left(\frac{a_i}{W}\right)^{1/2}\left[1.99 - \left(\frac{a_i}{W}\right)\left(1 - \frac{a_i}{W}\right)\left(2.15 - 3.93\left(\frac{a_i}{W}\right) + 2.7\left(\frac{a_i}{W}\right)^2\right)\right]}{2\left(1 + 2\frac{a_i}{W}\right)\left(1 - \frac{a_i}{W}\right)^{3/2}} \tag{A1.3}$$

A1.4.2 *Calculation of J:*

For the single edge bend specimen, calculate J as follows:

$$J = J_{el} + J_{pl} \tag{A1.4}$$

where:

J_{el} = elastic component of J, and
J_{pl} = plastic component of J.

A1.4.2.1 *J Calculations for the Basic Test Method*—At a point corresponding to v and P on the specimen force versus displacement record, calculate the J integral as follows:

$$J = \frac{K^2(1 - \nu^2)}{E} + J_{pl} \tag{A1.5}$$

where K is from A1.4.1 with $a = a_o$, and

$$J_{pl} = \frac{\eta_{pl} A_{pl}}{B_N b_o} \tag{A1.6}$$

where:

A_{pl} = area under force versus displacement record as shown in Fig. A1.2,
η_{pl} = 1.9 if the load-line displacement is used for A_{pl},
= $3.667 - 2.199(a_o/W) + 0.437(a_o/W)^2$ if the crack mouth opening displacement record is used for A_{pl},
B_N = net specimen thickness ($B_N = B$ if no side grooves are present), and
b_o = $W - a_o$.

All basic test method J integral values shall be corrected for crack growth using the following relationship (**11**):

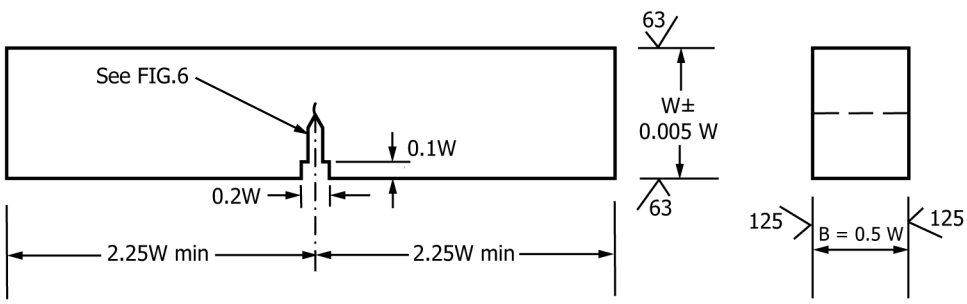

NOTE 1—The two side planes and the two edge planes shall be parallel and perpendicular as applicable to within 0.5°.
NOTE 2—The machined notch shall be perpendicular to specimen length and thickness to within ±2°.

FIG. A1.1 Recommended Single Edge Bend [SE(B)] Specimen

Documents
Document Sharing Hub

Full document details: ASTM E1820-24

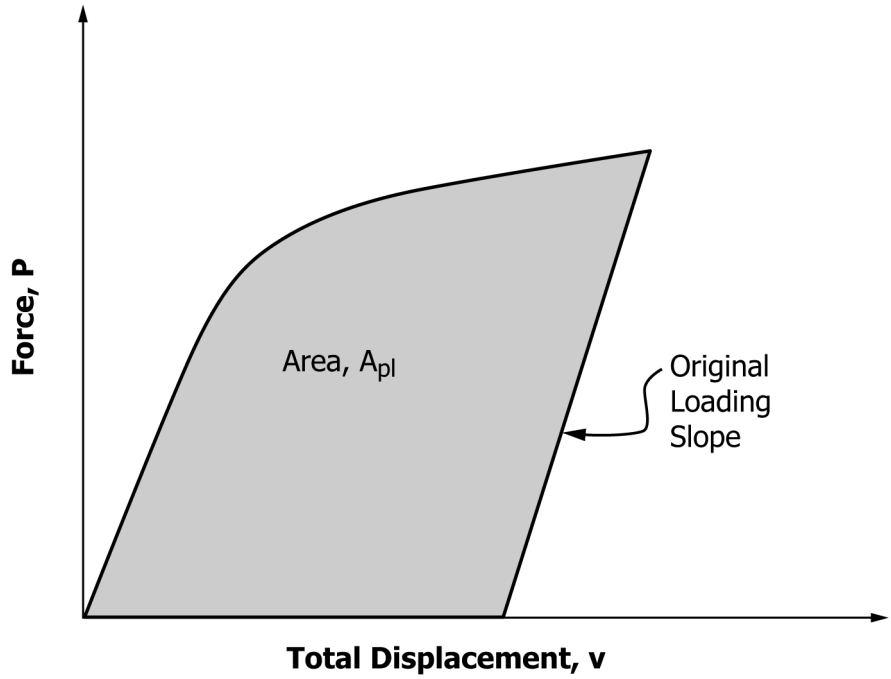

FIG. A1.2 Definition of Area for *J* Calculation Using the Basic Method

$$J = J_{el} + \frac{J_{pl}}{1 + \left(\frac{\alpha - 0.5}{\alpha + 0.5}\right)\frac{\Delta a}{b_o}} \quad \text{(A1.7)}$$

with α = 1 for SE(B) specimen.

A1.4.2.2 *J Calculations for the Resistance Curve Test Method*—At a point corresponding to $a_{(i)}$, $v_{(i)}$, and $P_{(i)}$ on the specimen force versus displacement record, calculate the *J* integral as follows:

$$J_{(i)} = \frac{(K_{(i)})^2 (1 - \nu^2)}{E} + J_{pl(i)} \quad \text{(A1.8)}$$

where $K_{(i)}$ is from A1.4.1, and

$$J_{pl(i)} = \left[J_{pl(i-1)} + \left(\frac{\eta_{pl(i-1)}}{b_{(i-1)}}\right)\left(\frac{A_{pl(i)} - A_{pl(i-1)}}{B_N}\right)\right] \times \quad \text{(A1.9)}$$

$$\left[1 - \gamma_{pl(i-1)}\left(\frac{a_{(i)} - a_{(i-1)}}{b_{(i-1)}}\right)\right]$$

where:

$\eta_{pl(i-1)}$ = 1.9, and
$\gamma_{pl(i-1)}$ = 0.9

if the load-line displacement is used to measure A_{pl} and,

$$\eta_{pl} = 3.667 - 2.199\left(\frac{a_{(i-1)}}{W}\right) + 0.437\left(\frac{a_{(i-1)}}{W}\right)^2$$

and

$$\gamma_{pl} = 0.131 + 2.131\left(\frac{a_{(i-1)}}{W}\right) - 1.465\left(\frac{a_{(i-1)}}{W}\right)^2$$

if the crack mouth opening displacement is used to measure A_{pl}.

In Eq A1.9, the quantity $A_{pl(i)} - A_{pl(i-1)}$ is the increment of plastic area under the chosen force versus plastic displacement record between lines of constant plastic displacement at points *i*–1 and *i* shown in Fig. A1.3. The quantity $J_{pl(i)}$ represents the total crack growth corrected plastic *J* at point *i* and is obtained in two steps by first incrementing the existing $J_{pl(i-1)}$ and then by modifying the total accumulated result to account for the crack growth increment. Accurate evaluation of $J_{pl(i)}$ from the Eq A1.9 relationship requires small and uniform crack growth increments consistent with the suggested elastic compliance spacing of Annex A8 and Annex A10. The quantity $A_{pl(i)}$ can be calculated from the following equation:

$$A_{pl(i)} = A_{pl(i-1)} + [P_{(i)} + P_{(i-1)}][v_{pl(i)} - v_{pl(i-1)}]/2 \quad \text{(A1.10)}$$

where:

$v_{pl(i)}$ = plastic part of the load-line or crack mouth opening displacement = $v_{(i)} - (P_{(i)} C_{(i)})$, and
$C_{(i)}$ = experimental compliance, $(\Delta v/\Delta P)_{(i)}$, corresponding to the current crack size, a_i.

NOTE A1.2—The point $P_{(i)}$, $v_{(i)}$ is the last data point recorded before the *i*-th unloading begins and before any hold period for stress relaxation as in accordance with 8.6.4.

For test methods that do not evaluate an experimental load-line elastic compliance, the load-line compliance $C_{(i)}$ can be determined from the following equation:

$$C_{(i)} = \frac{1}{EB_e}\left(\frac{S}{W - a_i}\right)^2 \times \quad \text{(A1.11)}$$

$$\left[1.193 - 1.98\left(\frac{a_i}{W}\right) + 4.478\left(\frac{a_i}{W}\right)^2 - 4.443\left(\frac{a_i}{W}\right)^3 + 1.739\left(\frac{a_i}{W}\right)^4\right]$$

where:

$B_e = B - (B - B_N)^2/B$

while for the crack mouth opening displacement case:

AVA Documents
Document Sharing Hub

Full document details: ASTM E1820-24

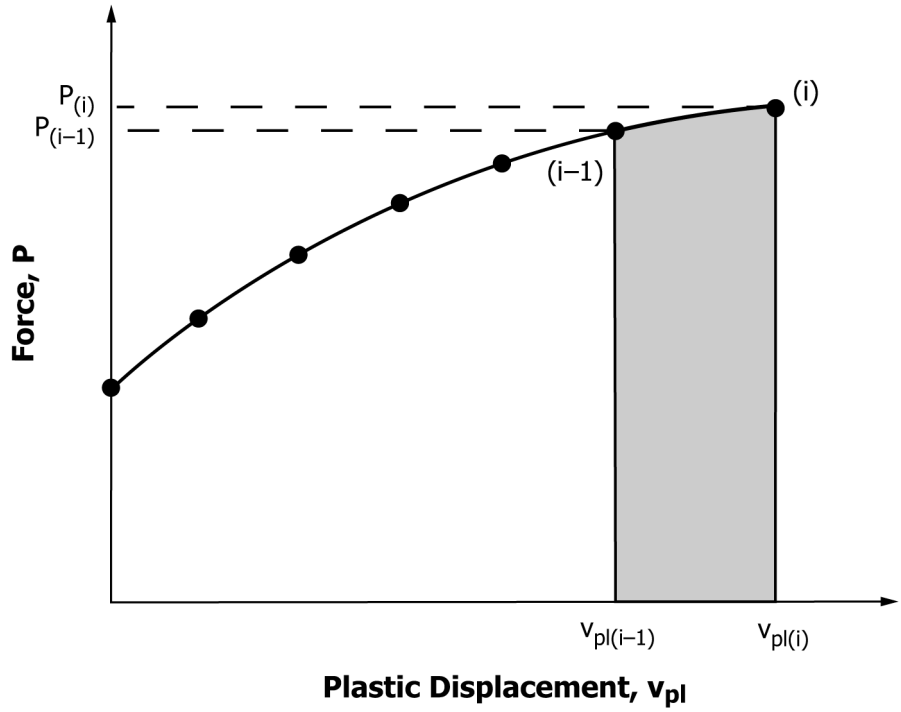

FIG. A1.3 Definition of Plastic Area for Resistance Curve *J* Calculation

$$C_{(i)} = \frac{6S}{EWB_e}\left(\frac{a_i}{W}\right)\times \tag{A1.12}$$

$$\left[0.76 - 2.28\left(\frac{a_i}{W}\right) + 3.87\left(\frac{a_i}{W}\right)^2 - 2.04\left(\frac{a_i}{W}\right)^3 + \frac{0.66}{(1 - a_i/W)^2}\right]$$

where:

$B_e = B - (B - B_N)^2/B$

The compliance estimated using Eq A1.11 or Eq A1.12 should be verified by calibrating against the initial experimental force versus load-line displacement data to assure the integrity of the load-line displacement measurement system.

A1.4.3 *Calculation of Crack Size*—For a resistance curve test method using an elastic compliance technique on single edge bend specimens with crack mouth opening displacements measured at the notched edge, the crack size is given as follows:

$$\frac{a_i}{W} = [0.999748 - 3.9504\,u + 2.9821\,u^2 - 3.21408\,u^3 + 51.51564\,u^4 - 113.031\,u^5] \tag{A1.13}$$

where:

$$u = \frac{1}{\left[\frac{B_e WEC_i}{S/4}\right]^{1/2} + 1} \tag{A1.14}$$

C_i = $(\Delta v_m/\Delta P)$ on an unloading/reloading sequence,
v_m = crack mouth opening displacement at notched edge,
B_e = $B - (B - B_N)^2/B$.

NOTE A1.3—Crack size on a single edge bend specimen is normally determined from crack mouth opening compliance. It can be determined from load-line compliance if the correct calibration is available.

A1.4.4 Other compliance equations are acceptable if the resulting accuracy is equal to or greater than those described and the accuracy has been verified experimentally.

A1.4.5 *Calculation of CTOD:*

A1.4.5.1 *Calculation of CTOD for the Basic Test Method*—For the basic test method, calculations of CTOD for any point on the force-displacement curve are made from the following expression:

$$\delta = \frac{J}{m\sigma_Y} \tag{A1.15}$$

where: J is defined in A1.4.2.1 with $a = a_o$, the original crack size, and then crack growth corrected using Annex A16 and:

$$m = A_0 - A_1 * \left(\frac{\sigma_{YS}}{\sigma_{TS}}\right) + A_2 * \left(\frac{\sigma_{YS}}{\sigma_{TS}}\right)^2 - A_3 * \left(\frac{\sigma_{YS}}{\sigma_{TS}}\right)^3 \tag{A1.16}$$

with :
$A_0 = 3.18\text{-}0.22 * (a_o/W)$,
$A_1 = 4.32\text{-}2.23 * (a_o/W)$,
$A_2 = 4.44\text{-}2.29 * (a_o/W)$, and
$A_3 = 2.05\text{-}1.06 * (a_o/W)$.

Calculation of δ requires $\sigma_{YS}/\sigma_{TS} \geq 0.5$.

A1.4.5.2 *Calculations of CTOD for the Resistance Curve Test Method*—For the resistance curve test method, calculations of CTOD for any point on the force-displacement curve are made from the following expression:

$$\delta_i = \frac{J_i}{m_i\sigma_Y} \tag{A1.17}$$

Documents
Document Sharing Hub

Full document details: ASTM E1820-24

where J_i is defined in A1.4.2.2 with $a = a_i$, the current crack size and:

$$m = A_0 - A_1 * \left(\frac{\sigma_{YS}}{\sigma_{TS}}\right) + A_2 * \left(\frac{\sigma_{YS}}{\sigma_{TS}}\right)^2 - A_3 * \left(\frac{\sigma_{YS}}{\sigma_{TS}}\right)^3 \quad (A1.18)$$

with :

$A_0 = 3.18\text{-}0.22 * (a_i/W)$,

$A_1 = 4.32\text{-}2.23 * (a_i/W)$,

$A_2 = 4.44\text{-}2.29 * (a_i/W)$, and

$A_3 = 2.05\text{-}1.06 * (a_i/W)$.

Calculation of δ_i requires $\sigma_{YS}/\sigma_{TS} \geq 0.5$.

A2. SPECIAL REQUIREMENTS FOR TESTING COMPACT SPECIMENS

A2.1 Specimen

A2.1.1 The standard compact specimen, *C(T)*, is a single edge-notched and fatigue cracked plate loaded in tension. Two acceptable specimen geometries are shown in Fig. A2.1.

A2.1.2 Recommended alternative specimens can have $2 \leq W/B \leq 4$, with no change in other proportions. Larger *W*/*B* ratios may be used, as long as specimen buckling and slant fracture are avoided. *W*/*B* ratios lower than 2 shall not be used.

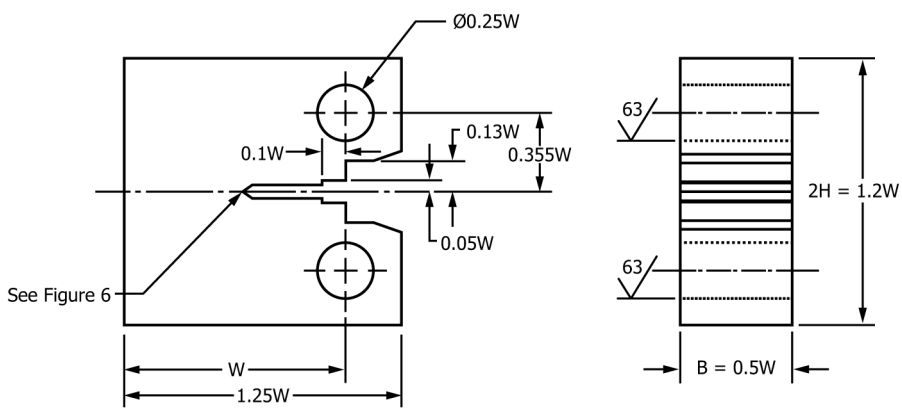

Notes:
1. Tolerance on all dimensions ±0.013W
2. Pin shall be sized so that maximum clearance with hole is 0.02W

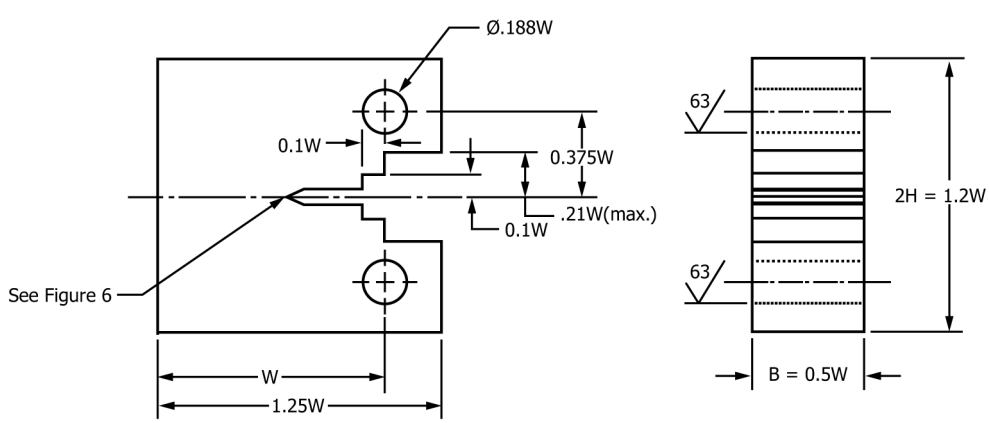

Notes:
1. Tolerance on all dimensions ±0.013W
2. Pin shall be sized so that maximum clearance with hole is 0.01W

FIG. A2.1 Two Compact Specimen Designs That Have Been Used Successfully for Fracture Toughness Testing

AVA Documents
Document Sharing Hub

Full document details: ASTM E1820-24

A2.2 Apparatus

A2.2.1 For generally applicable specifications concerning the loading clevis and displacement gage, see 6.2 and 6.5.2.

A2.3 Specimen Preparation

A2.3.1 For generally applicable specifications concerning specimen size and preparation, see Section 7.

A2.3.2 All specimens shall be precracked in fatigue at a force value based upon the force P_m as follows:

$$P_m = \frac{0.4Bb_o^2\sigma_Y}{2W+a_o} \quad \text{(A2.1)}$$

See Section 7 for fatigue precracking requirements.

A2.4 Calculation

A2.4.1 *Calculation of K*—For the compact specimen at a force $P_{(i)}$, calculate K as follows:

$$K_{(i)} = \frac{P_{(i)}}{(BB_N W)^{1/2}} f\left(\frac{a_i}{W}\right) \quad \text{(A2.2)}$$

with:

$$f\left(\frac{a_i}{W}\right) = \quad \text{(A2.3)}$$

$$\frac{\left\{\left(2+\frac{a_i}{W}\right)\left[0.886+4.64\left(\frac{a_i}{W}\right)-13.32\left(\frac{a_i}{W}\right)^2+14.72\left(\frac{a_i}{W}\right)^3-5.6\left(\frac{a_i}{W}\right)^4\right]\right\}}{\left(1-\frac{a_i}{W}\right)^{3/2}}$$

A2.4.2 *Calculation of J*—For the compact specimen calculate J as follows:

$$J = J_{el} + J_{pl} \quad \text{(A2.4)}$$

where:

J_{el} = elastic component of J, and
J_{pl} = plastic component of J.

A2.4.2.1 *J Calculations for the Basic Test Method*—For the compact specimen at a point corresponding to ν, P on the specimen force versus load-line displacement record, calculate as follows:

$$J = \frac{K^2(1-\nu^2)}{E} + J_{pl} \quad \text{(A2.5)}$$

where:
K is from A2.4.1 with $a = a_o$, and

$$J_{pl} = \frac{\eta_{pl} A_{pl}}{B_N b_o} \quad \text{(A2.6)}$$

where:

A_{pl} = area shown in Fig. A1.2,
B_N = net specimen thickness ($B_N = B$ if no side grooves are present),
b_o = uncracked ligament, $(W - a_o)$, and
η_{pl} = $2 + 0.522b_o/W$.

All basic test method J integral values shall be corrected for crack growth using the following relationship (**11**):

$$J = J_{el} + \frac{J_{pl}}{1+\left(\frac{\alpha-0.5}{\alpha+0.5}\right)\frac{\Delta a}{b_o}} \quad \text{(A2.7)}$$

with α = 0.9 for the C(T) specimen.

A2.4.2.2 *J Calculation for the Resistance Curve Test Method*—For the *C(T)* specimen at a point corresponding $a_{(i)}$, $\nu_{(i)}$, and $P_{(i)}$ on the specimen force versus load-line displacement record calculate as follows:

$$J_{(i)} = \frac{(K_{(i)})^2(1-\nu^2)}{E} + J_{pl(i)} \quad \text{(A2.8)}$$

where $K_{(i)}$ is from A2.4.1, and:

$$J_{pl(i)} = \quad \text{(A2.9)}$$

$$\left[J_{pl(i-1)} + \left(\frac{\eta_{pl(i-1)}}{b_{(i-1)}}\right)\frac{A_{pl(i)} - A_{pl(i-1)}}{B_N}\right]\left[1-\gamma_{(i-1)}\left(\frac{a_{(i)}-a_{(i-1)}}{b_{(i-1)}}\right)\right]$$

where:

$\eta_{pl(i-1)}$ = $2.0 + 0.522\, b_{(i-1)}/W$, and
$\gamma_{(i-1)}$ = $1.0 + 0.76\, b_{(i-1)}/W$.

In Eq A2.9, the quantity $A_{pl(i)} - A_{pl(i-1)}$ is the increment of plastic area under the force versus plastic load-line displacement record between lines of constant displacement at points i–1 and i shown in Fig. A1.3. The quantity $J_{pl(i)}$ represents the total crack growth corrected plastic J at point i and is obtained in two steps by first incrementing the existing $J_{pl(i-1)}$ and then by modifying the total accumulated result to account for the crack growth increment. Accurate evaluation of $J_{pl(i)}$ from the above relationship requires small and uniform crack growth increments consistent with the suggested elastic compliance spacing of Annex A8 and Annex A10. The quantity $A_{pl(i)}$ can be calculated from the following equation:

$$A_{pl(i)} = A_{pl(i-1)} + \frac{[P_{(i)} + P_{(i-1)}][\nu_{pl(i)} - \nu_{pl(i-1)}]}{2} \quad \text{(A2.10)}$$

where:

$\nu_{pl(i)}$ = plastic part of the load-line displacement, $\nu_i - P_{(i)}C_{LL(i)}$, and
$C_{LL(i)}$ = experimental compliance, $(\Delta\nu/\Delta P)_i$, corresponding to the current crack size, a_i.

NOTE A2.1—The point $P_{(i)}$, $\nu_{(i)}$ is the last data point recorded before the i-th unloading begins and before any hold period for stress relaxation as in accordance with 8.6.4.

For test methods that do not evaluate an experimental elastic compliance, $C_{LL(i)}$ can be determined from the following equation:

$$C_{LL(i)} = \frac{1}{EB_e}\left(\frac{W+a_i}{W-a_i}\right)^2\left[2.1630+12.219\left(\frac{a_i}{W}\right)-20.065\left(\frac{a_i}{W}\right)^2 - 0.9925\left(\frac{a_i}{W}\right)^3+20.609\left(\frac{a_i}{W}\right)^4-9.9314\left(\frac{a_i}{W}\right)^5\right] \quad \text{(A2.11)}$$

where:

$$B_e = B - \frac{(B-B_N)^2}{B} \quad \text{(A2.12)}$$

The load-line compliance estimated using Eq A2.11 should be verified by calibrating against the initial experimental compliance to assure the integrity of the load-line displacement measurement system.

In an elastic compliance test, the rotation corrected compliance, $C_c(i)$, described in A2.4.5 shall be used instead of $C_{LL(i)}$ in Eq A2.11.

AVA Documents
Document Sharing Hub

Full document details: ASTM E1820-24

A2.4.3 *Calculation of Crack Size*—For a single specimen test method using an elastic compliance technique on the compact specimen with crack opening displacements measured on the load-line, the crack size is given as follows:

$$a_i/W = 1.000196 - 4.06319u + 11.242u^2 - 106.043u^3 + 464.335u^4 - 650.677u^5 \quad (A2.13)$$

where:

$$u = \frac{1}{\left[B_e E C_{c(i)}\right]^{1/2} + 1} \quad (A2.14)$$

$C_{c(i)}$ = specimen load-line crack opening elastic compliance ($\Delta v/\Delta P$) on an unloading/reloading sequence corrected for rotation (see A2.4.5),

B_e = $B - (B - B_N)^2/B$.

A2.4.4 The calculation of crack size values for *C(T)* specimens is a two-step procedure. First, values of uncorrected crack size a_i are obtained from measured values of load-line compliance C_i using Eq A2.13 and A2.14. Uncorrected crack size values are then used to calculate the corresponding values of the radius of rotation of the crack centerline, R_i, as follows:

$$R_i = \frac{W + a_i}{2} \quad (A2.15)$$

A2.4.5 To account for crack opening displacement in *C(T)* specimens, the crack size estimation shall be corrected for rotation. Compliance is corrected as follows:

$$C_{c(i)} = \frac{C_i}{\left(\frac{H^*}{R_i}\sin\theta_i - \cos\theta_i\right)\left(\frac{D}{R_i}\sin\theta_i - \cos\theta_i\right)} \quad (A2.16)$$

where (Fig. A2.2):

C_i = measured specimen elastic compliance, $\Delta v_m/\Delta P_m$, (at the load-line),

$C_{c(i)}$ = corrected specimen elastic compliance, $\Delta v_c/\Delta P_c$ (at the load-line),

H^* = initial half-span of the load points (center of the pin holes),

R_i = radius of rotation of the crack centerline, $(W + a)/2$, where a is the updated crack size,

D = one half of the initial distance between the displacement measurement points,

θ = angle of rotation of a rigid body element about the unbroken midsection line, or

$$\theta_i = \arcsin\left(\frac{D + \frac{v_{m(i)}}{2}}{\sqrt{D^2 + R_i^2}}\right) - \arctan\left(\frac{D}{R_i}\right), \text{ and} \quad (A2.17)$$

$v_{m(i)}$ = total measured load-line displacement at the beginning of the *i*-th unloading/reloading cycle,

v_c = total corrected load-line displacement at the beginning of the i-th unloading/reloading cycle.

A2.4.6 Other compliance equations are acceptable if the resulting accuracy is equal to or greater than those described and the accuracy has been verified experimentally.

A2.4.7 *Calculation of CTOD:*

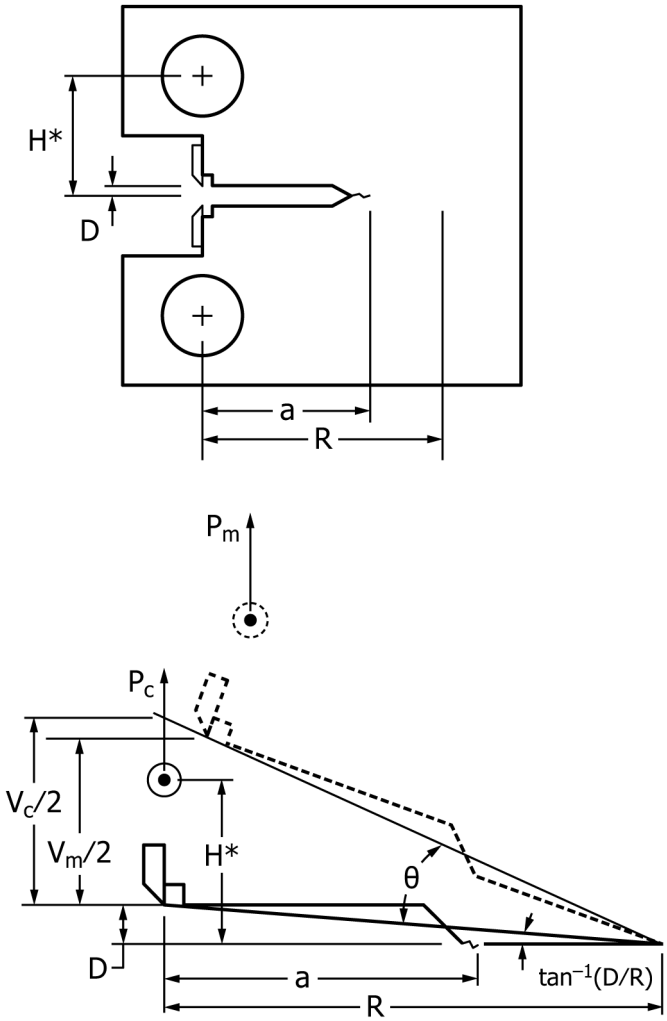

FIG. A2.2 Elastic Compliance Correction for Specimen Rotation

A2.4.7.1 *Calculation of CTOD for the Basic Test Method*—For the basic test method, calculations of CTOD for any point on the force-displacement curve are made from the following expression:

$$\delta = \frac{J}{m\sigma_Y} \quad (A2.18)$$

where J is defined in A2.4.2.1 with $a = a_o$, the original crack size, and then crack growth corrected using Annex A16 and:

$$m = A_0 - A_1{*}\left(\frac{\sigma_{YS}}{\sigma_{TS}}\right) + A_2{*}\left(\frac{\sigma_{YS}}{\sigma_{TS}}\right)^2 - A_3{*}\left(\frac{\sigma_{YS}}{\sigma_{TS}}\right)^3 \quad (A2.19)$$

with: A_0=3.62, A_1 = 4.21, A_2=4.33, and A_3=2.00. Calculation of δ requires $\sigma_{YS}/\sigma_{TS} \geq 0.5$.

A2.4.7.2 *Calculation of CTOD for the Resistance Curve Test Method*—For the resistance curve test method, calculations of CTOD for any point on the force-displacement curve are made from the following expression:

$$\delta_i = \frac{J_i}{m\sigma_Y} \quad (A2.20)$$

where J is defined in A2.4.2.2 with $a = a_i$, the current crack size, and,

AVA Documents
Document Sharing Hub

Full document details: ASTM E1820-24

$$m = A_0 - A_1 * \left(\frac{\sigma_{YS}}{\sigma_{TS}}\right) + A_2 * \left(\frac{\sigma_{YS}}{\sigma_{TS}}\right)^2 - A_3 * \left(\frac{\sigma_{YS}}{\sigma_{TS}}\right)^3 \quad (A2.21)$$

with: A_0=3.62, A_1 = 4.21, A_2=4.33, and A_3=2.00. Calculation of δ_i requires $\sigma_{YS}/\sigma_{TS} \geq 0.5$.

A3. SPECIAL REQUIREMENTS FOR TESTING DISK-SHAPED COMPACT SPECIMENS

A3.1 Specimen

A3.1.1 The standard disk-shaped compact specimen, DC(T), is a single edge-notched and fatigue cracked plate loaded in tension. The specimen geometry which has been used successfully is shown in Fig. A3.1.

A3.1.2 Recommended alternative specimens can have $2 \leq W/B \leq 4$, with no change in other proportions. Larger *W*/*B* ratios may be used, as long as specimen buckling and slant fracture are avoided. *W*/*B* ratios lower than 2 shall not be used.

A3.2 Apparatus

A3.2.1 For generally applicable specifications concerning the loading clevis and displacement gage see 6.2 and 6.5.2.

A3.3 Specimen Preparation

A3.3.1 For generally applicable specifications concerning specimen size and preparation, see Section 7.

A3.3.2 All specimens shall be precracked in fatigue at a force value based upon the force P_m as follows:

$$P_m = \frac{0.4Bb_o^2\sigma_Y}{2W + a_o} \quad (A3.1)$$

See 7.4 for precracking requirements.

A3.4 Procedure

A3.4.1 *Measurement*— The analysis assumes the specimen was machined from a circular blank, and, therefore, measurements of circularity as well as width, *W*; crack size, *a*; and thicknesses, *B* and B_N, shall be made. Measure the dimensions B_N and *B* to the nearest 0.05 mm (0.002 in.) or 0.5 %, whichever is larger.

A3.4.1.1 The specimen blank shall be checked for circularity before specimen machining. Measure the diameter at eight equally spaced points around the circumference of the specimen blank. One of these measurements shall lie in the intended notch plane. Average these readings to obtain the diameter, *D*. If any measurement differs from the average diameter, *D*, by more than 5 %, machine the blank to the required circularity. Otherwise, *D* = 1.35 *W*.

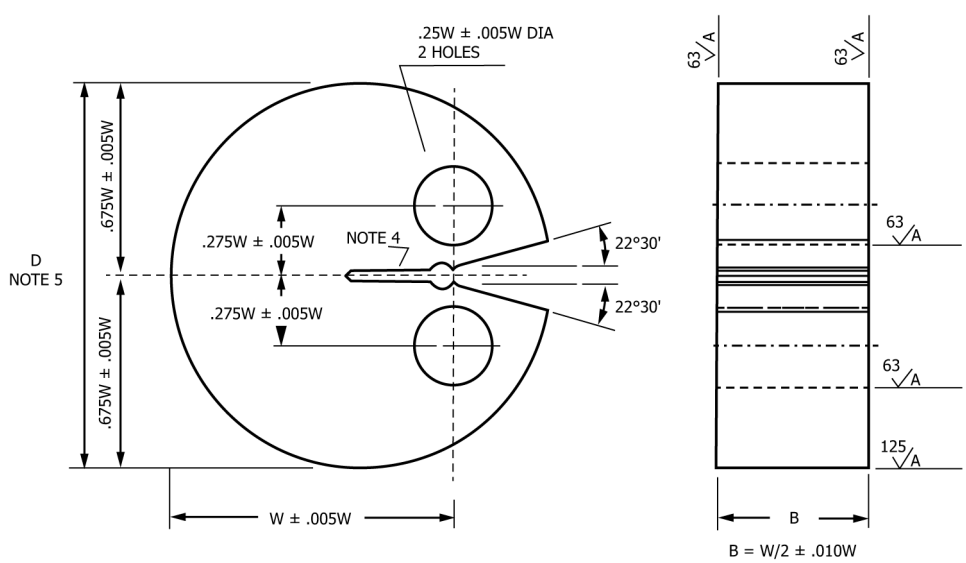

NOTE 1—All surfaces shall be perpendicular and parallel as applicable within 0.002 *W* TIR.

NOTE 2—The intersection of the crack starter notch tips on each surface of the specimen shall be equally distant within 0.005W from the centerline of the loading holes.

NOTE 3—Integral or attached knife edges for clip gage attachment to the crack mouth may be used.

NOTE 4—For starter-notch and fatigue-crack configuration see Fig. 7.

NOTE 5—Required circularity measurements shall be made at eight equally spaced points around the circumference. One of these points shall be the notch plane. Average the readings to obtain the radius. All values shall be within 5 % of the average.

FIG. A3.1 Disk-Shaped Compact Specimen, DC(T), Standard Proportions and Dimensions

AVA Documents
Document Sharing Hub

Full document details: ASTM E1820-24

A3.4.1.2 Measure the width, W, and the crack size, a, from the plane of the centerline of the loading holes (the notched edge is a convenient reference line but the distance from the centerline of the holes to the notched edge must be subtracted to determine W and a). Measure the width, W, to the nearest 0.05 mm (0.002 in.) or 0.5 %, whichever is larger.

A3.5 Calculation

A3.5.1 *Calculation of K*—For the DC(T) specimen at a force $P_{(i)}$, calculate K as follows:

$$K_{(i)} = \frac{P_{(i)}}{(BB_N W)^{1/2}} f(a_i/W) \tag{A3.2}$$

where:

$$f\left(\frac{a_i}{W}\right) = \tag{A3.3}$$

$$\frac{\left\{\left(2+\frac{a_i}{W}\right)\left[0.76+4.8\left(\frac{a_i}{W}\right)-11.58\left(\frac{a_i}{W}\right)^2+11.43\left(\frac{a_i}{W}\right)^3-4.08\left(\frac{a_i}{W}\right)^4\right]\right\}}{\left(1-\frac{a_i}{W}\right)^{3/2}}$$

A3.5.2 *Calculation of J*—For the DC(T) specimen, calculate J as follows:

$$J = J_{el} + J_{pl} \tag{A3.4}$$

where:

J_{el} = elastic component of J, and
J_{pl} = plastic component of J.

A3.5.2.1 *J Calculation for the Basic Test Method*—For the DC(T) specimen at a point corresponding to $v_{(i)}$, $P_{(i)}$ on the specimen force versus load-line displacement record, calculate as follows:

$$J = \frac{K^2(1-\nu^2)}{E} + J_{pl} \tag{A3.5}$$

where K is from A3.5.1 with $a = a_o$, and

$$J_{pl} = \frac{\eta_{pl} A_{pl}}{B_N b_o} \tag{A3.6}$$

where:

A_{pl} = area shown in Fig. A1.2,
B_N = net specimen thickness ($B_N = B$ if no side grooves are present),
b_o = uncracked ligament, $(W - a_o)$, and
η_{pl} = $2 + 0.522 b_o/W$.

All basic test method J integral values shall be corrected for crack growth using the following relationship (**11**):

$$J = J_{el} + \frac{J_{pl}}{1+\left(\frac{\alpha-0.5}{\alpha+0.5}\right)\frac{\Delta a}{b_o}} \tag{A3.7}$$

with $\alpha = 0.9$ for the DC(T) specimen.

A3.5.2.2 *J Calculation for the Resistance Curve Test Method*—For the DC(T) specimen at a point corresponding to a_i, v_i, and P_i on the specimen force versus load-line displacement record, calculate as follows:

$$J_{(i)} = \frac{(K_{(i)})^2(1-\nu^2)}{E} + J_{pl(i)} \tag{A3.8}$$

where $K_{(i)}$ is from A3.5.1 and:

$$J_{pl(i)} = \tag{A3.9}$$

$$\left[J_{pl(i-1)} + \left(\frac{\eta_{(i-1)}}{b_{(i-1)}}\right)\frac{A_{pl(i)} - A_{pl(i-1)}}{B_N}\right]\left[1 - \gamma_{(i-1)}\frac{a_{(i)} - a_{(i-1)}}{b_{(i-1)}}\right]$$

where:

$\eta_{(i-1)}$ = $2.0 + 0.522\, b_{(i-1)}/W$, and
$\gamma_{(i-1)}$ = $1.0 + 0.76\, b_{(i-1)}/W$.

In the preceding equation, the quantity $A_{pl(i)} - A_{pl(i-1)}$ is the increment of plastic area under the force versus load-line displacement record between lines of constant displacement at points i–1 and i shown in Fig. A1.3. The quantity $J_{pl(i)}$ represents the total crack growth corrected plastic J at point i and is obtained in two steps by first incrementing the existing $J_{pl(i-1)}$ and then by modifying the total accumulated result to account for the crack growth increment. Accurate evaluation of $J_{pl(i)}$ from the preceding relationship requires small and uniform crack growth increments consistent with the suggested elastic compliance spacing of Annex A8 and Annex A10. The quantity $A_{pl(i)}$ can be calculated from the following equation:

$$A_{pl(i)} = A_{pl(i-1)} + \frac{[P_{(i)} + P_{(i-1)}][v_{pl(i)} - v_{pl(i-1)}]}{2} \tag{A3.10}$$

where :

$v_{pl(i)}$ = plastic part of the load-line displacement, $v_i - P_{(i)}C_{LL(i)}$, and
$C_{LL(i)}$ = experimental compliance, $(\Delta v/\Delta P)_i$, corresponding to the current crack size, a_i.

For test methods that do not evaluate an experimental elastic compliance, $C_{LL(i)}$ can be determined from the following equation:

$$C_{LL(i)} = \frac{1}{EB_e}\left(\frac{1+\frac{a_{(i)}}{W}}{1-\frac{a_{(i)}}{W}}\right)^2 \times \tag{A3.11}$$

$$\left[2.0462+9.6496\left(\frac{a_{(i)}}{W}\right)-13.7346\left(\frac{a_{(i)}}{W}\right)^2+6.1748\left(\frac{a_{(i)}}{W}\right)^3\right]$$

where:

B_e = $B - (B - B_N)^2/B$.

NOTE A3.1—The point $P_{(i)}$, $v_{(i)}$ is the last data point recorded before the i-th unloading begins and before any hold period for stress relaxation as in accordance with 8.6.4.

The compliance estimated using Eq A3.11 should be verified by calibrating against the initial experimental compliance to assure the integrity of the load-line displacement measurement system.

In an elastic compliance test, the rotation corrected compliance, $C_c(i)$, described in A3.5.5 shall be used instead of $C_{LL(i)}$ given above.

A3.5.3 *Calculation of Crack Size*—For a single-specimen test method using an elastic compliance technique on DC(T) specimens with crack opening displacements measured at the load-line, the crack size is given as follows:

AVA Documents
Document Sharing Hub

Full document details: ASTM E1820-24