This international standard was developed in accordance with internationally recognized principles on standardization established in the Decision on Principles for the Development of International Standards, Guides and Recommendations issued by the World Trade Organization Technical Barriers to Trade (TBT) Committee.

Designation: E1844 – 08 (Reapproved 2020)

Standard Specification for a Size 10 × 4–5 Smooth-Tread Friction Test Tire[1]

This standard is issued under the fixed designation E1844; the number immediately following the designation indicates the year of original adoption or, in the case of revision, the year of last revision. A number in parentheses indicates the year of last reapproval. A superscript epsilon (ε) indicates an editorial change since the last revision or reapproval.

1. Scope

1.1 This specification covers the general requirements for a smooth-tread standard tire for measuring tire-pavement friction forces.

1.2 The values stated in SI units are to be regarded as the standard. The values given in parentheses are provided for information purposes only.

1.3 *This standard does not purport to address all of the safety concerns, if any, associated with its use. It is the responsibility of the user of this standard to establish appropriate safety, health, and environmental practices and determine the applicability of regulatory limitations prior to use.*

1.4 *This international standard was developed in accordance with internationally recognized principles on standardization established in the Decision on Principles for the Development of International Standards, Guides and Recommendations issued by the World Trade Organization Technical Barriers to Trade (TBT) Committee.*

2. Referenced Documents

2.1 *ASTM Standards:*[2]

D297 Test Methods for Rubber Products—Chemical Analysis

D412 Test Methods for Vulcanized Rubber and Thermoplastic Elastomers—Tension

D1054 Test Method for Rubber Property—Resilience Using a Goodyear-Healey Rebound Pendulum (Withdrawn 2010)[3]

D1765 Classification System for Carbon Blacks Used in Rubber Products

D2240 Test Method for Rubber Property—Durometer Hardness

D3182 Practice for Rubber—Materials, Equipment, and Procedures for Mixing Standard Compounds and Preparing Standard Vulcanized Sheets

E867 Terminology Relating to Vehicle-Pavement Systems

2.2 *Other Document:*

Griptester—GTSV1 Descriptive Booklet[4]

3. Terminology

3.1 Terminology used in this specification is in accordance with Terminology E867.

4. Materials and Manufacture

4.1 The individual standard tires shall conform to the design standards of Section 6. Dimensions, weights, and permissible variations are also given in Section 6 and Figs. 1 and 2.

4.2 Tread compounding, fabric processing, and all tire manufacturing shall be certified to ensure that the specifications are met (see Section 8).

4.3 The markings on the tire, as shown in Fig. 1, shall be molded on the sides of the tire.

4.4 Fig. 1 shows a view of the tread surface and a side view of the tire. Fig. 2 is a typical tire cross section with critical dimensions identified.

4.5 Tire should be mounted so that it is rotated in the direction of the arrow on the side of the tire. See Fig. 1.

5. Material Requirements

5.1 The compounding requirements for the tread compound are given in Table 1.

5.2 The fabric shall be Nylon, 1260/2 Denier.

NOTE 1—Certain proprietary products have been specified since exact duplication of properties of the finished tire may not be achieved with other similar products. This inclusion does not in any way comprise a recommendation for these proprietary products nor against similar products of other manufacturers, nor does it imply any superiority over any such similar products.

6. Physical Requirements

6.1 The physical and mechanical test requirements of the tread compound are given in Table 2.

[1] This specification is under the jurisdiction of ASTM Committee E17 on Vehicle - Pavement Systems and is the direct responsibility of Subcommittee E17.24 on Tire and Slider Characteristics.

Current edition approved Sept. 1, 2020. Published September 2020. Originally approved in 1996. Last previous edition approved in 2015 as E1844 – 08 (2015). DOI: 10.1520/E1844-08R20.

[2] For referenced ASTM standards, visit the ASTM website, www.astm.org, or contact ASTM Customer Service at service@astm.org. For *Annual Book of ASTM Standards* volume information, refer to the standard's Document Summary page on the ASTM website.

[3] The last approved version of this historical standard is referenced on www.astm.org.

[4] Available from Findlay-Irvine Ltd., Bog Road, Penicuik, Midlothian EH269BU, Scotland.

Copyright © ASTM International, 100 Barr Harbor Drive, PO Box C700, West Conshohocken, PA 19428-2959. United States

Documents
Document Sharing Hub
Full document details: ASTM E1844-08(2020)

FIG. 1 Molded on Tire: 10 × 4–5 Tread ASTM Batch No.

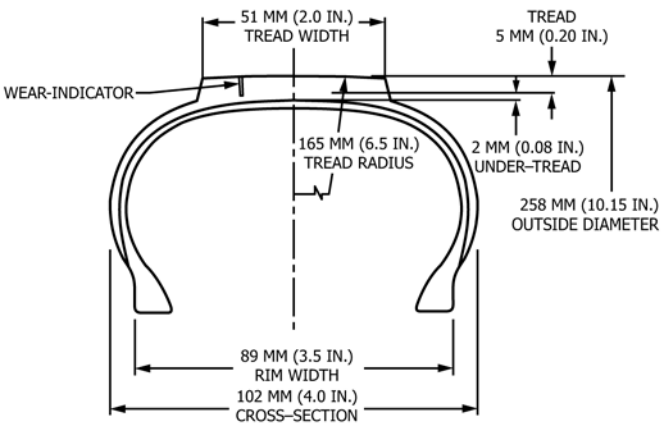

FIG. 2 Tire Section—Inflated Dimensions

TABLE 1 Compounding of Tread Rubber[A]

Material	PPHR
SBR 1712[B]	89.38
BR 1208[C]	35.00
Zinc oxide	3.00
Stearic acid	2.00
Paraffin wax	2.00
N339[D]	75.00
6PPD[E]	2.00
High-aromatic oil	22.12
TBBS[F]	1.10
DPG[G]	0.10
Sulfur	1.80

[A] See Practice D3182.
[B] Styrene-butadiene rubber (23.5 % styrene) 37.5 parts of high-aromatic oil.
[C] High cis-polybutadiene.
[D] N339 Carbon Black, see Classification D1765.
[E] Dimethyl butylphenyl phenylenediamine.
[F] Butyl benzothiazole sulfenamide.
[G] Diphenyl guanidine.

7. Construction, Dimensions, and Permissible Variations

7.1 *Construction*—The tire shall be size 10 × 4–5, tube type, two plies, nylon cord, and bias construction.

7.2 *Dimensions*—Tread width shall be 51 ± 2.0 mm (2.0 ± 0.08 in.), the tread radius shall be 165 ± 25 mm (6.5 ± 1.0 in.), the cross-sectional width shall be 102 ± 2 mm (4.0 ± 0.08 in.), and the outside diameter at the centerline shall be 258 ± 2 mm (10.15 ± 0.08 in.) when measured on a 89 mm (3.5 in.) wide rim at 138 ± 3 kPa (20 ± 0.5 psi). See Fig. 2 which shows the inflated dimensions of the new tire.

7.3 *Tread*—The tread surface shall be smooth (blank) without any ribs or grooves. The tread shall have a thickness of 5 mm (0.20 in.) and an undertread thickness of 2 ± 0.5 mm (0.08 ± 0.02 in.) at the tread centerline.

TABLE 2 Physical Properties of Tread Compound

Tensile sheet cure, min. at 302 °F (150 °C)	30
300 % modulus, psi (Test Methods D412)	1000 ± 200
Specific gravity (Test Methods D297)	1.13 ± 0.02
Tensile strength, min psi (Test Methods D412)	2000
Elongation, min % (Test Methods D412)	500
Tire tread durometer (Test Method D2240)	58 ± 2

7.4 *Wear Indicators*—There will be two holes molded into the tire tread, 5.0 mm (0.20 in.) deep and 3.2 mm (0.125 in.) in diameter. These two wear indicators will be spaced 180° apart.

8. Workmanship

8.1 Tires shall be free of defects in workmanship and material.

AVA Documents
Document Sharing Hub

Full document details: ASTM E1844-08(2020)