Designation: E1859/E1859M – 11$^{\varepsilon 1}$

Standard Test Method for Friction Coefficient Measurements Between Tire and Pavement Using a Variable Slip Technique[1]

This standard is issued under the fixed designation E1859/E1859M; the number immediately following the designation indicates the year of original adoption or, in the case of revision, the year of last revision. A number in parentheses indicates the year of last reapproval. A superscript epsilon (ε) indicates an editorial change since the last revision or reapproval.

ε[1] NOTE—Editorially corrected units of measure formatting in November 2013.

1. Scope

1.1 This test method covers the measurement of the longitudinal friction coefficient with a measurement device that imposes braking-slip between a tire and a surface for the full range of braking-slip speed values.

1.2 This test method utilizes a series of incremental single measurements of friction force on a braked test wheel as it is pulled over a wetted or contaminated pavement surface. The rotational velocity of the braked wheel is feedback controlled in order to give a predetermined variable slip ratio gradient in accordance with set program parameters. The test wheel is kept under a constant static normal load and at a constant longitudinal speed of travel. Its major plane is perpendicular to the road plane and parallel to its direction of motion.

1.3 The values measured represent the friction properties obtained with the equipment and procedures stated in this test method and do not necessarily agree or correlate directly with those obtained by other pavement friction measuring methods.

1.4 The values are intended for use in:

1.4.1 Evaluating the braking friction forces on a pavement relative to that of other pavements.

1.4.2 Evaluating changes in the braking friction forces of a particular pavement with the passage of time.

1.4.3 Evaluating the changes in the braking friction force of a pavement when subjected to polishing wear and loss of macrotexture caused by traffic with passage of time.

1.4.4 Evaluating changes in the braking friction forces of a pavement contaminated with ice, moderate amounts[2] of slush and snow, pollen, vehicle oil spills and condensates from vehicle engine exhaust, and deposits from other pollution sources.

1.4.5 Evaluating the braking friction forces of a specimen tire on a clean or contaminated pavement.

1.5 The friction values reported by this test method are insufficient to determine the distance required to stop a vehicle on either a dry, wet, or contaminated pavement. They are also insufficient for determining the speed at which control of a vehicle would be lost.

1.6 The values stated in either SI units or inch-pound units are to be regarded separately as standard. The values stated in each system may not be exact equivalents; therefore, each system shall be used independently of the other. Combining values from the two systems may result in non-conformance with the standard.

1.7 *This standard does not purport to address all of the safety concerns, if any, associated with its use. It is the responsibility of the user of this standard to establish appropriate safety and health practices and determine the applicability of regulatory limitations prior to use.* Specific precautionary statements are given in Section 6 and Note 4.

2. Referenced Documents

2.1 *ASTM Standards:*[3]

E178 Practice for Dealing With Outlying Observations

E274 Test Method for Skid Resistance of Paved Surfaces Using a Full-Scale Tire

E501 Specification for Rib Tire for Pavement Skid-Resistance Tests

E524 Specification for Smooth Tire for Pavement Skid-Resistance Tests

E867 Terminology Relating to Vehicle-Pavement Systems

E1136 Specification for P195/75R14 Radial Standard Reference Test Tire

E1551 Specification for Special Purpose, Smooth–Tread Tire, Operated on Fixed Braking Slip Continuous Friction Measuring Equipment

[1] This test method is under the jurisdiction of ASTM Committee E17 on Vehicle - Pavement Systems and is the direct responsibility of Subcommittee E17.21 on Field Methods for Measuring Tire Pavement Friction.

Current edition approved Jan. 1, 2011. Published March 2011. Originally approved in 1997. Last previous edition approved in 2006 as E1859 – 97 (2006). DOI: 10.1520/E1859_E1859M-11E01.

[2] Slush thickness less than 25 mm [1 in.]. Loose snow thickness less than 50 mm [2 in.].

[3] For referenced ASTM standards, visit the ASTM website, www.astm.org, or contact ASTM Customer Service at service@astm.org. For *Annual Book of ASTM Standards* volume information, refer to the standard's Document Summary page on the ASTM website.

Copyright © ASTM International, 100 Barr Harbor Drive, PO Box C700, West Conshohocken, PA 19428-2959. United States

Documents
Document Sharing Hub
Full document details: ASTM E1859/E1859M-11e1

F377 Practice for Calibration of Braking/Tractive Measuring Devices for Testing Tires

3. Terminology

3.1 The terminology used in this test method conforms to the terminology included in Terminology E867.

3.2 *Definitions of Terms Specific to This Standard:*

3.2.1 *peak slip friction number, n*—the maximum value of the slip friction number.

3.2.1.1 *Discussion*—The peak slip friction number is written as $SFN_{peak}(s)$ where s is the slip speed at which it occurred.

3.2.2 *slip friction number, n*—the quotient of the longitudinal friction force in the road plane over the normal load force at any instant in time and location, multiplied by 100.

3.2.2.1 *Discussion*—The slip friction number is denoted as *sfn(t)* for instantaneous values in time, or *sfn(x)* for instantaneous values in location. The notation $SFN_{characteristic}$ specifies computed values or the slip friction number at a specified characteristic.

3.2.3 *slip speed, n*—the difference between the speed of the axis of the measuring wheel, which is equal to the traveling speed of the measuring device, and the speed of point on the perimeter of the rotating measuring wheel with undeflected radius, *r*.

3.2.4 *slip-to-skid friction number, n*—the value of the slip friction number at which the test wheel reaches zero rotational speed during a brake test.

3.2.4.1 *Discussion*—The slip-to-skid friction number is denoted $SFN_{skid}(v)$ where v is the vehicle speed v at which slip-to-skid occurred.

3.2.5 *slope indicator*—the rate of change of *the slip friction number* expressed as an angle near the peak slip friction number.

3.2.6 *tire longitudinal stiffness indicator*—the rate of change of *the slip friction number* expressed as an angle near the zero value of the time or location.

4. Summary of Test Method

4.1 The test apparatus consists of an automotive vehicle with one or two independently functioning test wheel systems incorporated into it. Each test wheel system contains a continuously variable brake system and a pavement wetting system. The test wheel is equipped with a standard pavement test tire, a reference tire, or a specimen tire as required for performing pavement surface measurements or tire comparisons, respectively. See 5.3 for standard tire references.

4.2 The overall system is controlled by a programmable control unit. The proper test control program is selected in the control unit for either pavement braking friction or tire comparison between a reference tire and a specimen tire.

4.3 The test apparatus is brought to the desired test speed. A controlled amount of water is optionally delivered ahead of the test tire and the braking system is actuated to control the slip ratio of the test wheel. As the brake is applied to the test wheel, the actual rotational velocity of the tire becomes less than the longitudinal component of the tire velocity. As a result of this velocity difference, commonly called the slip speed, a longitudinal force is generated called the longitudinal braking slip friction force.

NOTE 1—Water delivery is not used when testing during winter on ice or snow or at subzero temperatures.

4.4 The resulting resistive force from friction acting between the test tire and pavement surface is sampled, filtered, calculated, and recorded by suitable data acquisition routines. The distance of travel of the test vehicle is added up over time and recorded with the aid of suitable digital fifth wheel instrumentation.

4.5 For tire comparison testing two identical test wheels, both are subjected to the same test run control logic for equal spin velocities and loads in parallel wheel paths on the same test track.

4.6 The braking slip friction coefficient of the paved road surface is calculated and reported as slip friction numbers, *sfn(t)*, at selected instances in time or traveled distance, *sfn(x)*.

4.7 The slip friction numbers are typically presented in a graphical form. See Fig. 1 for Cartesian plots of slip friction numbers versus slip speed or slip ratio with identification of:

4.7.1 Peak friction value,

4.7.2 Its corresponding critical slip ratio,

4.7.3 An estimated slip-to-skid friction number (similar to Test Method E274 Skid Number, SN),

4.7.4 The slope of the tangent at zero slip speed of the curve, and

4.7.5 The slope of the logarithm curve of friction at high slip ratios.

5. Apparatus

5.1 *Vehicle*—The host vehicle of the measuring system, with variable braking force applied, shall be capable of maintaining constant test speeds over the range of speed for the application. For example, speeds range up to 130 km/h at airports runways.

5.2 *Braking System*—The speed of the test wheel shall be controlled by a suitably rated brake system. For example, this may be accomplished by a hydraulic pump as a braking device. The pump can be installed in a closed hydraulic circuit such

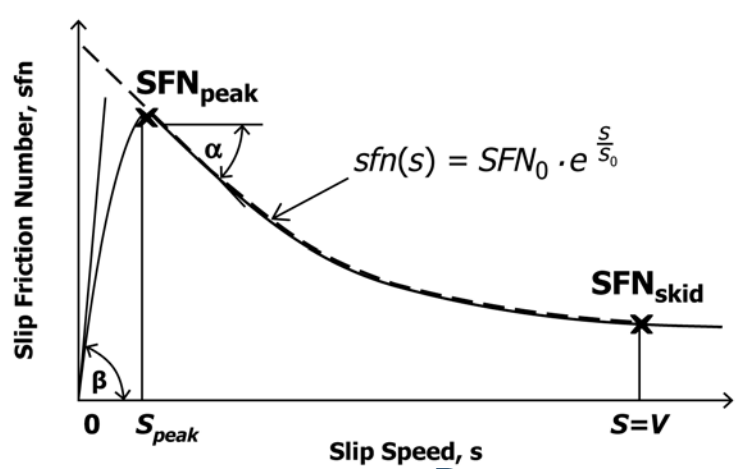

FIG. 1 Sample Slip Friction Number Trace Versus Slip Speed

AVA Documents
Document Sharing Hub

Full document details: ASTM E1859/E1859M-11e1

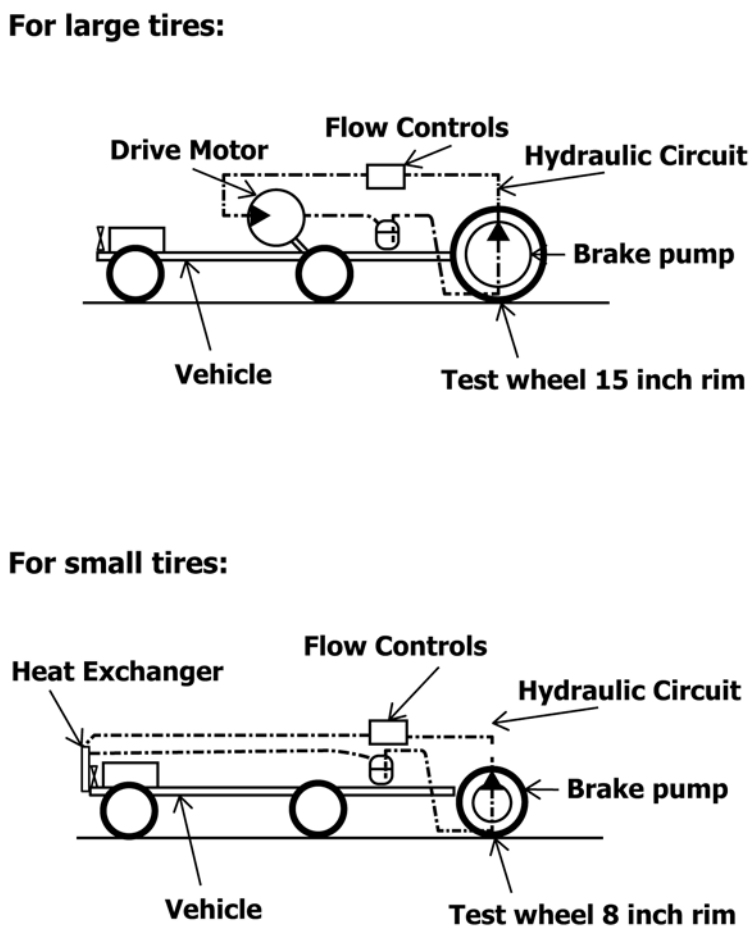

FIG. 2 Sample Brake Systems

that the energy delivered by the test wheel is dissipated either by a hydraulic motor that augments the tow vehicle drive system or by a suitable pressure reduction valve and a thermal heat exchanger. See Fig. 2. The brake system shall be capable of maintaining controlled test wheel rotational velocities independent of influence by test speed and external forces acting upon the wheel. For example, it shall maintain fixed slip ratios within ±2 %.

5.3 *Test Wheel Specifications and Loading*—The load settings shall be the following for these nominal tire and rim[4] combinations:

5.3.1 *Tire Rim 15 × 6 JJ:*

5.3.1.1 Suitable test tires are given in Specifications E501 and E524, but note that data from the two tires are not interchangeable.

5.3.1.2 For these tires the normal load shall be 4.8 kN ± 65 N [1080 ± 14.6 lbf]. The inflation pressure shall be 165 ± 3 kPa [24 ± 0.5 psi].

5.3.2 *Tire Rim 14 × 5.5 JJ*—A suitable test tire is given in Specification E1136. The normal load shall be 4.8 kN ± 65 N [1080 ± 14.6 lbf]. The inflation pressure shall be 165 ± 3 kPa [24 ± 0.5 psi].

5.3.3 *Tire Rim 8 × 4*—A suitable test tire is given in Specification E1551. The normal load shall be 1.423 kN ± 14 N [320 ± 3 lbf]. The inflation pressure shall be 207 ± 3 kPa [30 ± 0.5 psi].

5.4 *Instrumentation (See Fig. 3):*

5.4.1 *General Requirements for Measuring System*—The instrumentation and control system shall conform to the following overall requirements at ambient temperatures between –20 and 40°C [0 and 100°F]:

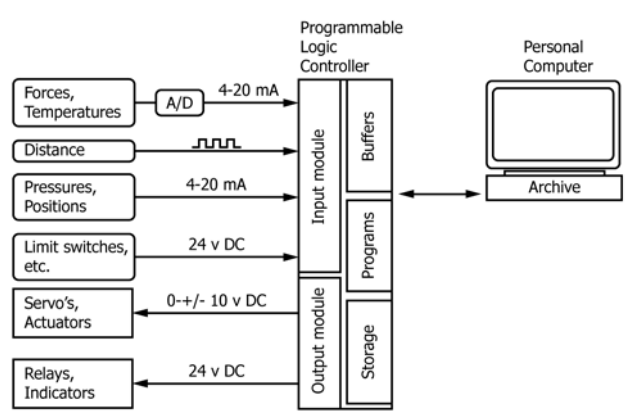

FIG. 3 Sample Instrumentation Scheme for Control and Measurements

[4] In accordance with Tire and Rim Association (TRA), 3200 W. Market St., Akron, OH 44313, USA.

AVA Documents
Document Sharing Hub

Full document details: ASTM E1859/E1859M-11e1