This international standard was developed in accordance with internationally recognized principles on standardization established in the Decision on Principles for the Development of International Standards, Guides and Recommendations issued by the World Trade Organization Technical Barriers to Trade (TBT) Committee.

Designation: E2058 – 19

An American National Standard

Standard Test Methods for Measurement of Material Flammability Using a Fire Propagation Apparatus (FPA)[1]

This standard is issued under the fixed designation E2058; the number immediately following the designation indicates the year of original adoption or, in the case of revision, the year of last revision. A number in parentheses indicates the year of last reapproval. A superscript epsilon (ε) indicates an editorial change since the last revision or reapproval.

1. Scope

1.1 This fire-test-response standard determines and quantifies material flammability characteristics, related to the propensity of materials to support fire propagation, by means of a fire propagation apparatus (FPA). Material flammability characteristics that are quantified include time to ignition (t_{ign}), chemical ($\dot{Q}_{chem}$), and convective ($\dot{Q}_c$) heat release rates, mass loss rate ($\dot{m}$) and effective heat of combustion (EHC).

1.2 The following test methods, capable of being performed separately and independently, are included herein:

1.2.1 *Ignition Test,* to determine t_{ign} for a horizontal specimen;

1.2.2 *Combustion Test,* to determine $\dot{Q}_{chem}$, $\dot{Q}_c$, $\dot{m}$, and EHC from burning of a horizontal specimen; and,

1.2.3 *Fire Propagation Test,* to determine $\dot{Q}_{chem}$ from burning of a vertical specimen.

1.3 Distinguishing features of the FPA include tungsten-quartz external, isolated heaters to provide a radiant flux of up to 110 kW/m^2 to the test specimen, which remains constant whether the surface regresses or expands; provision for combustion or upward fire propagation in prescribed flows of normal air, air enriched with up to 40 % oxygen, air oxygen vitiated, pure nitrogen or mixtures of gaseous suppression agents with the preceding air mixtures; and, the capability of measuring heat release rates and exhaust product flows generated during upward fire propagation on a vertical test specimen 0.305 m high.

1.4 The FPA is used to evaluate the flammability of materials and products. It is also designed to obtain the transient response of such materials and products to prescribed heat fluxes in specified inert or oxidizing environments and to obtain laboratory measurements of generation rates of fire products (CO_2, CO, and, if desired, gaseous hydrocarbons) for use in fire safety engineering.

1.5 Ignition of the specimen is by means of a pilot flame at a prescribed location with respect to the specimen surface.

1.6 The Fire Propagation test of vertical specimens is not suitable for materials that, on heating, melt sufficiently to form a liquid pool.

1.7 Values stated are in SI units. Values in parentheses are for information only.

1.8 This standard is used to measure and describe the response of materials, products, or assemblies to heat and flame under controlled conditions, but does not by itself incorporate all factors required for fire hazard or fire risk assessment of the materials, products or assemblies under actual fire conditions.

1.9 *This standard does not purport to address all of the safety concerns, if any, associated with its use. It is the responsibility of the user of this standard to establish appropriate safety, health, and environmental practices and determine the applicability of regulatory limitations prior to use.* For specific hazard statements, see Section 7.

1.10 *This international standard was developed in accordance with internationally recognized principles on standardization established in the Decision on Principles for the Development of International Standards, Guides and Recommendations issued by the World Trade Organization Technical Barriers to Trade (TBT) Committee.*

2. Referenced Documents

2.1 *ASTM Standards:*[2]

E176 Terminology of Fire Standards

E906 Test Method for Heat and Visible Smoke Release Rates for Materials and Products Using a Thermopile Method

E1321 Test Method for Determining Material Ignition and Flame Spread Properties

E1354 Test Method for Heat and Visible Smoke Release Rates for Materials and Products Using an Oxygen Consumption Calorimeter

[1] These test methods are under the jurisdiction of ASTM Committee E05 on Fire Standards and are the direct responsibility of Subcommittee E05.22 on Surface Burning.

Current edition approved July 1, 2019. Published July 2019. Originally approved in 2000. Last previous edition approved in 2013 as E2058 – 13a. DOI: 10.1520/E2058-19.

[2] For referenced ASTM standards, visit the ASTM website, www.astm.org, or contact ASTM Customer Service at service@astm.org. For *Annual Book of ASTM Standards* volume information, refer to the standard's Document Summary page on the ASTM website.

Copyright © ASTM International, 100 Barr Harbor Drive, PO Box C700, West Conshohocken, PA 19428-2959. United States

Documents
Document Sharing Hub

Full document details: ASTM E2058-19

E1623 Test Method for Determination of Fire and Thermal Parameters of Materials, Products, and Systems Using an Intermediate Scale Calorimeter (ICAL)

3. Terminology

3.1 *Definitions*—For definitions of terms used in these test methods, refer to Terminology E176.

3.2 *Definitions of Terms Specific to This Standard:*

3.2.1 *fire propagation, n*—increase in the exposed surface area of the specimen that is actively involved in flaming combustion.

3.3 *Symbols:*

A_d = cross sectional area of test section duct (m^2)
c_p = specific heat of air at constant pressure (kJ/kg K)
$\dot{G}_{co}$ = mass flow rate of CO in test section duct (kg/s)
$\dot{G}_{co_2}$ = mass flow rate of CO_2 in test section duct (kg/s)
ΔH_{eff} = effective heat of combustion (kJ/kg)
K = flow coefficient of averaging Pitot tube [duct gas velocity/$(2\Delta p_m/\rho)^{1/2}$] (-)
M_{loss} = ultimate change in specimen mass resulting from combustion (kg)
$\dot{m}$ = mass loss rate of test specimen (kg/s)
$\dot{m}_d$ = mass flow rate of gaseous mixture in test section duct (kg/s)
P_{atm} = atmospheric pressure (Pa)
Δp_m = pressure differential across averaging Pitot tube in test section duct (Pa)
Q = cumulative heat released during Combustion Test (kJ)
$\dot{Q}_{chem}$ = chemical heat release rate (kW)
$\dot{Q}_c$ = convective heat release rate (kW)
T_a = gas temperature in test section duct before ignition (*K*)
T_d = gas temperature in test section duct (*K*)
t = time (s)
t_{ign} = ignition time (s)
Δt = time between data scans (s)
X_{CO_2} = measured carbon dioxide analyzer reading or mole fraction of carbon dioxide (-)
X_{CO} = measured carbon monoxide analyzer reading or mole fraction of CO (-)

3.4 *Superscripts:*

$\dot{}$ = per unit time (s^{-1})
^{0} = before ignition of the specimen

3.5 *Subscripts:*

$_d$ = test section duct
$_j$ = fire product

4. Summary of Test Method

4.1 Three separate test methods are composed herein, and are used independently in conjunction with a Fire Propagation Apparatus. The Ignition and Combustion test methods involve the use of horizontal specimens subjected to a controlled, external radiant heat flux, which can be set from 0 up to 110 kW/m^2. The Fire Propagation test method involves the use of vertical specimens subjected to ignition near the base of the specimen from an external radiant heat flux and a pilot flame. Both the Combustion and Fire Propagation test methods can be performed using an inlet air supply that is either normal air or other gaseous mixtures, such as air with added nitrogen or air enriched with up to 40 % oxygen.

4.2 The Ignition test method is used to determine the time required for ignition, t_{ign}, of horizontal specimens by a pilot flame as a function of the magnitude of a constant, externally applied radiant heat flux. Measurements also are made of time required until initial fuel vaporization. The surface of these specimens is coated with a thin layer of black paint to ensure complete absorption of the radiant heat flux from the infrared heating system (note that the coating does not itself undergo sustained flaming).

4.3 The Combustion test method is used to determine the chemical and convective heat release rates when the horizontal test specimen is exposed to an external radiant heat flux.

4.4 The Fire Propagation test method is used to determine the chemical heat release rate of a burning, vertical specimen during upward fire propagation and burning initiated by a heat flux near the base of the specimen. Chemical heat release rate is derived from the release rates of carbon dioxide and carbon monoxide. Observations also are made of the flame height on the vertical specimen during fire propagation.

5. Significance and Use

5.1 These test methods are an integral part of existing test standards for cable fire propagation and clean room material flammability, as well as, in an approval standard for conveyor belting (**1-3**).[3] Refs (**1-3**) use these test methods because fire-test-response results obtained from the test methods correlate with fire behavior during real-scale fire propagation tests, as discussed in X1.4.

5.2 The Ignition, Combustion, or Fire Propagation test method, or a combination thereof, have been performed with materials and products containing a wide range of polymer compositions and structures, as described in X1.7.

5.3 The Fire Propagation test method is different from the test methods in the ASTM standards listed in 2.1 by virtue of producing laboratory measurements of the chemical heat release rate during upward fire propagation and burning on a vertical test specimen in normal air, oxygen-enriched air, or in oxygen-vitiated air. Test methods from other standards, for example, Test Method E1321, which yields measurements during lateral/horizontal or downward flame spread on materials and Test Methods E906, E1354, and E1623, which yield measurements of the rate of heat release from materials fully involved in flaming combustion, generally use an external radiant flux, rather than the flames from the burning material itself, to characterize fire behavior.

5.4 These test methods are not intended to be routine quality control tests. They are intended for evaluation of specific flammability characteristics of materials. Materials to be analyzed consist of specimens from an end-use product or the

[3] The boldface numbers in parentheses refer to the list of references at the end of this standard.

AVA Documents
Document Sharing Hub

Full document details: ASTM E2058-19

various components used in the end-use product. Results from the laboratory procedures provide input to fire propagation and fire growth models, risk analysis studies, building and product designs, and materials research and development.

6. Apparatus

6.1 *General:*

6.1.1 Where dimensions are stated in the text or in figures, they shall be considered mandatory and shall be followed within a nominal tolerance of ±0.5 %. An exception is the case of components meant to fit together, where the joint tolerance shall be appropriate for a sliding fit.

6.1.2 The apparatus (see overview in Fig. 1 and exploded views in Figs. 2 and 3) shall consist of the following components: an infrared heating system, a load cell system, an ignition pilot flame and timer, a product gas analysis system, a combustion air distribution system, a water-cooled shield, an exhaust system, test section instruments, calibration instruments, and a digital data acquisition system.

6.2 *Infrared (IR) Heating System*—The IR Heating System[4] shall consist of four 241-mm long heaters (see different views in Figs. 1-3) and a power controller.

6.2.1 *IR Heaters*—Each of four IR heaters shall contain six tungsten filament tubular quartz lamps in a compact reflector body that produces up to 510 kW/m^2 of radiant flux in front of the quartz window that covers the lamps. The reflector body is water cooled and the lamp chamber, between the quartz window and reflector, is air cooled for prolonged life. The emitter of each lamp is a 127-mm long tungsten filament in an argon atmosphere enclosed in a 9.5-mm outer diameter clear quartz tube. The emitter operates at approximately 2205°C (4000°F) at rated voltage, with a spectral energy peak at 1.15 micron. Wavelengths greater than about 2-microns are absorbed by the quartz bulb envelope and heater front window, which are air cooled.

6.2.2 *Power Controller*—The controller shall maintain the output voltage required by the heater array despite variations in load impedance through the use of phase angle power control to match the hot/cold resistance characteristics of the tungsten/quartz lamps. The controller also shall incorporate average voltage feedback to linearize the relationship between the voltage set by the operator and the output voltage to the lamps.

6.3 *Load Cell System*—The load cell system, shown in Figs. 1-3, shall consist of a load cell, which shall have an accuracy of 0.1 g, and a measuring range of 0–1000 g; a 6.35-mm diameter stainless steel shaft, at least 330 mm long, resting on the load cell support point; a 100-mm diameter, 1.5-mm thick aluminum load platform connected to the upper end of the stainless steel shaft by a collar; and two low friction, ball-bushing bearings that guide the shaft as it passes through the top and bottom, respectively, of the air distribution chamber. The stainless steel shaft shall incorporate, at the lower end, a threaded adjustment rod to compensate for horizontal test specimens of different thicknesses.

6.4 *Ignition Pilot Flame*—The ignition pilot shall consist of an ethylene/air (6.5/93.5 by volume) flame adjusted for a 10-mm length. The pilot flame is anchored at the 50-mm long, horizontal end of a 6.35-mm O.D., 4.70-mm I.D. stainless steel tube. In the horizontal tube section, use a four-hole ceramic insert to produce a stable flame and prevent flashback. The pilot flame tube shall be able to be rotated and elevated to position the horizontal flame at specified locations near the specimen, as shown in Figs. 2 and 3.

6.5 *Ignition Timer*—The device for measuring time to sustained flaming shall be capable of recording elapsed time to the nearest tenth of 1 s and have an accuracy of better than 1 s in 1 h.

6.6 *Gas Analysis System*—The gas analysis system shall consist of a gas sampling system and gas analysis instruments, described in 6.6.1 – 6.6.4

6.6.1 *Gas Sampling*—The gas sampling arrangement is shown in Fig. 4. This arrangement consists of a sampling probe in the test section duct, a plastic filter (5-micron pore size) to prevent entry of soot, a condenser operating at temperatures in the range –5°C to 0°C to remove liquids, a tube containing an indicating desiccant (10–20 mesh) to remove most of the remaining moisture, a filter to prevent soot from entering the analyzers, if not already removed, a sampling pump that transports the flow through the sampling line, a system flow meter, and manifolds to direct the flow to individual analyzers (CO, CO_2, O_2, and hydrocarbon gas). The sampling probe, made of 6.35-mm (0.25-in.) O.D. stainless steel tubing inserted through a test section port, shall be positioned such that the open end of the tube is at the center of the test section. The sampling probe is connected to a tee fitting that allows either sample or calibration gas to flow to the analyzer, and the excess to waste.

6.6.2 *Carbon Dioxide/Carbon Monoxide Analyzers*—The carbon dioxide analyzer shall permit measurements from 0 to 15 000 ppm and the carbon monoxide analyzer shall permit measurements from 0 to 500 ppm concentration levels. Drift shall be not more than ±1 % of full scale over a 24-h period. Precision shall be 1 % of full-scale and the 10 to 90 % of full-scale response time shall be 10 s or less (typically 5 s for the ranges specified).

6.6.3 *Inlet-Air Oxygen Analyzer*—This analyzer shall have a 10 to 90 % of full-scale response time of 12 s or less, an accuracy of 1 % of full-scale, a noise and drift of not more than ± 100 ppm O_2 over a one-half-hour period and a 0 to 50 % range.

6.6.4 *Optional Product Analyzers for the Combustion Test*—An additional oxygen analyzer can be used to measure the depletion of oxygen in the combustion products. This analyzer should have the same specifications as the inlet-air analyzer but should have a concentration range of 19 to 21 %. A hydrocarbon gas analyzer employing the flame ionization

[4] The Model 5208-05 high density infrared heater with Model 500T3/CL/HT lamps and Model 664 SCR power controller; or Hi-Temp 5209-05 with QIH240-1000R12 lamps and Model 3629C power controller, manufactured by Research, Inc., P.O. Box 24064, Minneapolis, MN 55424 is suitable for this purpose.

The sole source of supply of the apparatus known to the committee at this time is Research, Inc. If you are aware of alternative suppliers, please provide this information to ASTM International Headquarters. Your comments will receive careful consideration at a meeting of the responsible technical committee,[1] which you may attend.

AVA Documents
Document Sharing Hub

Full document details: ASTM E2058-19

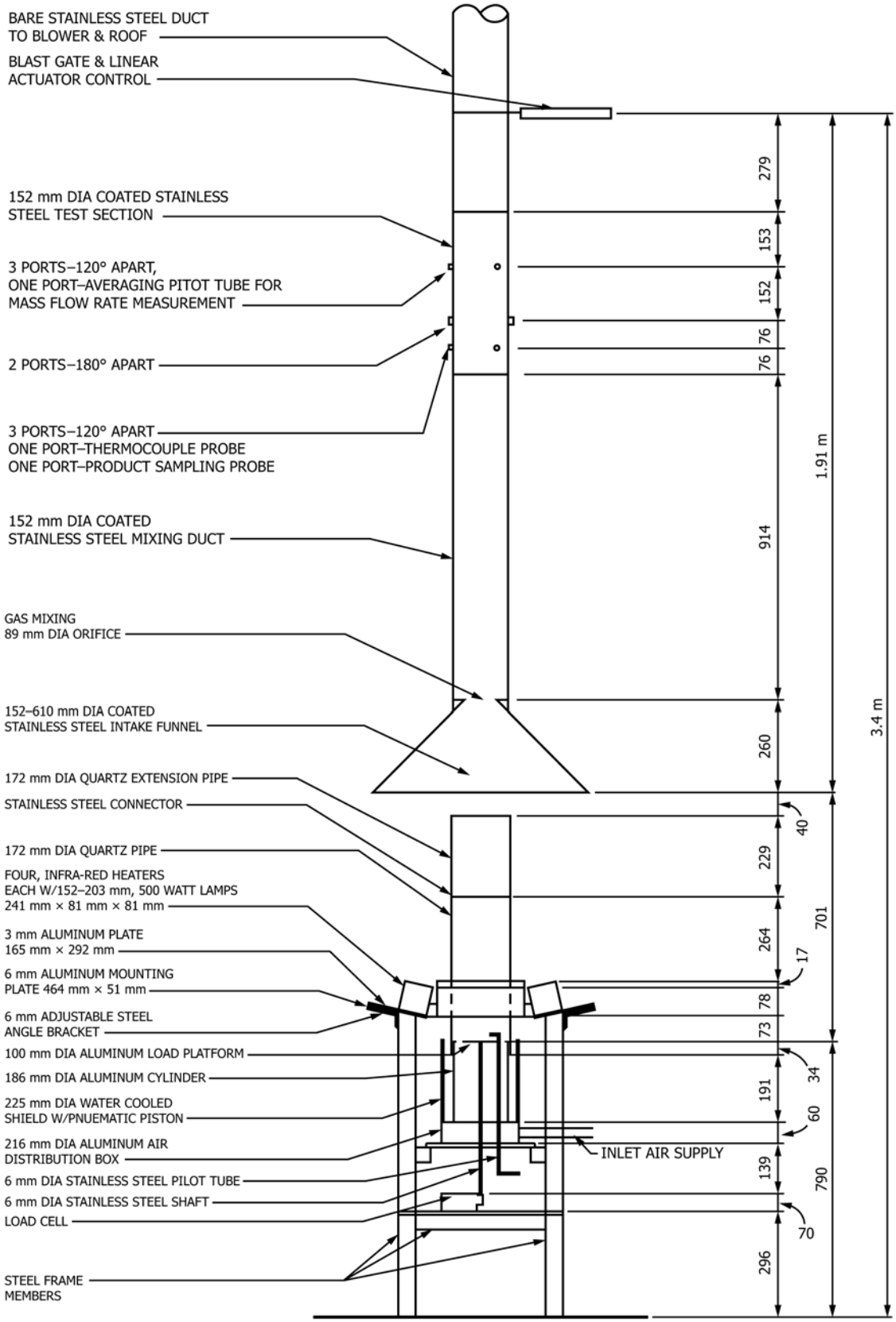

MAIN VIEW

ALL DIMENSIONS ARE mm UNLESS NOTED

FIG. 1 Main View

Documents
Document Sharing Hub

Full document details: ASTM E2058-19

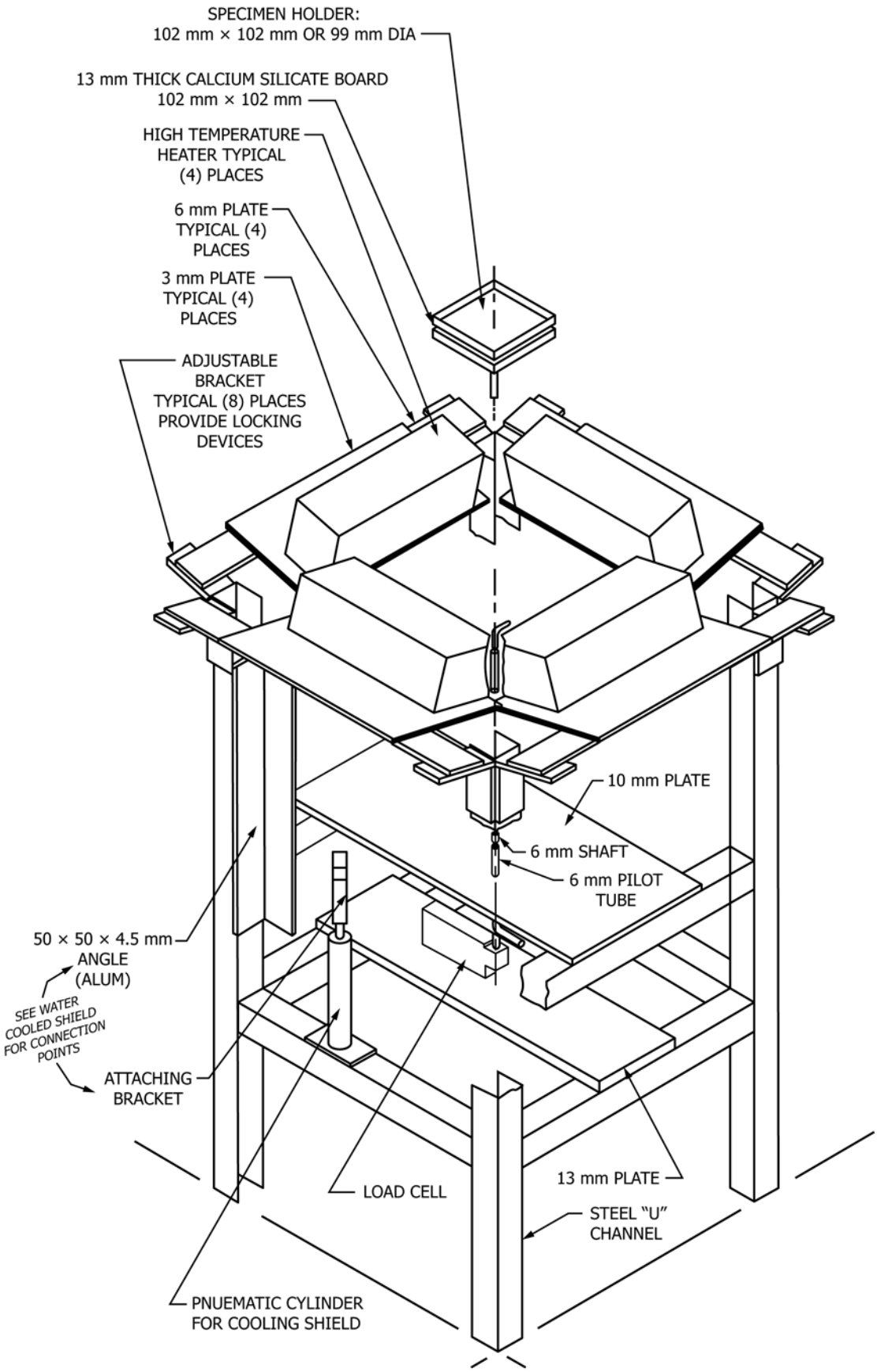

FIG. 2 Exploded View of Specimen Mounting

Documents
Document Sharing Hub

Full document details: ASTM E2058-19

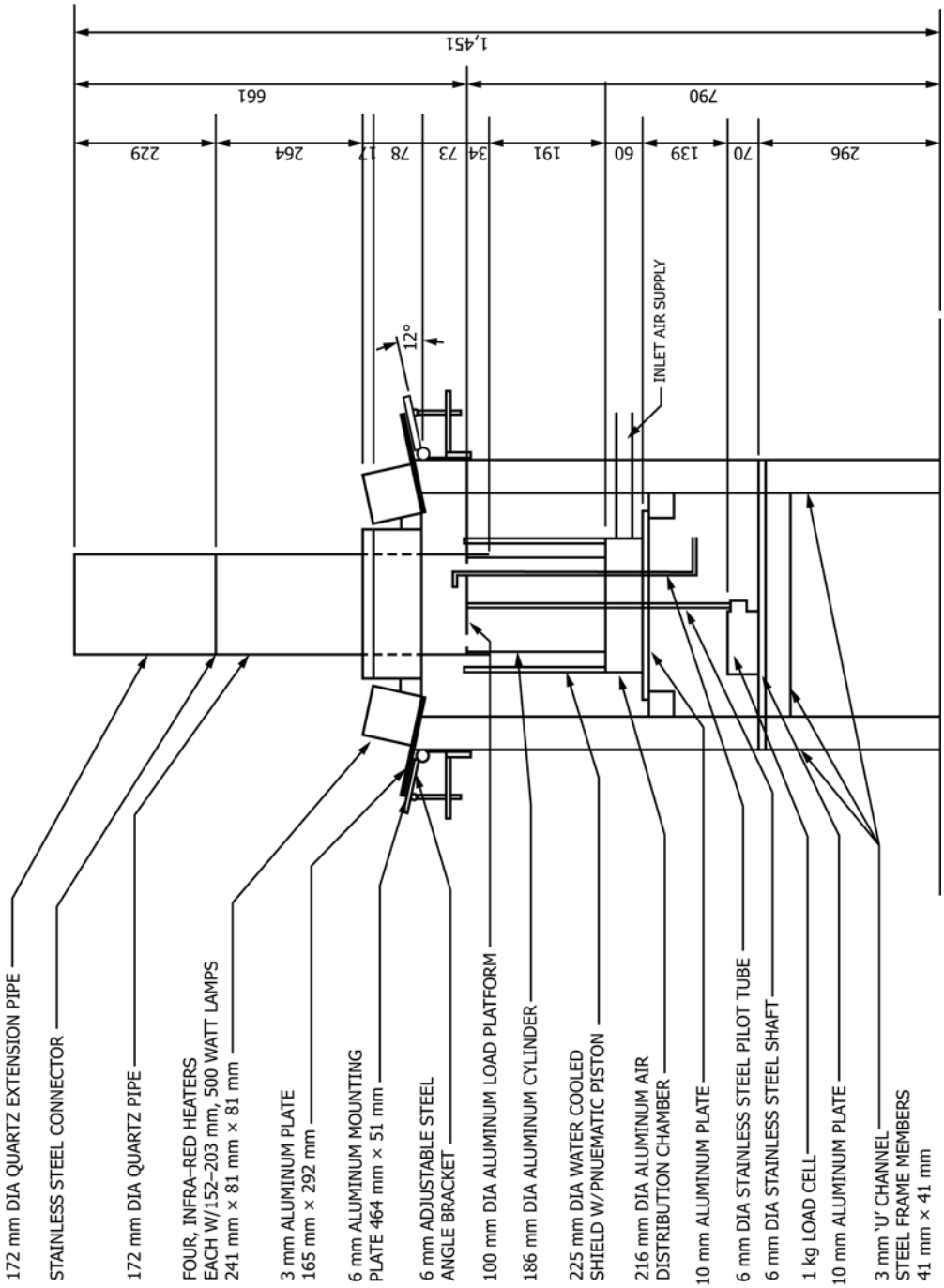

NOTE 1—All dimensions are in mm unless noted.

FIG. 3 Exploded Main View

Documents
Document Sharing Hub
Full document details: ASTM E2058-19

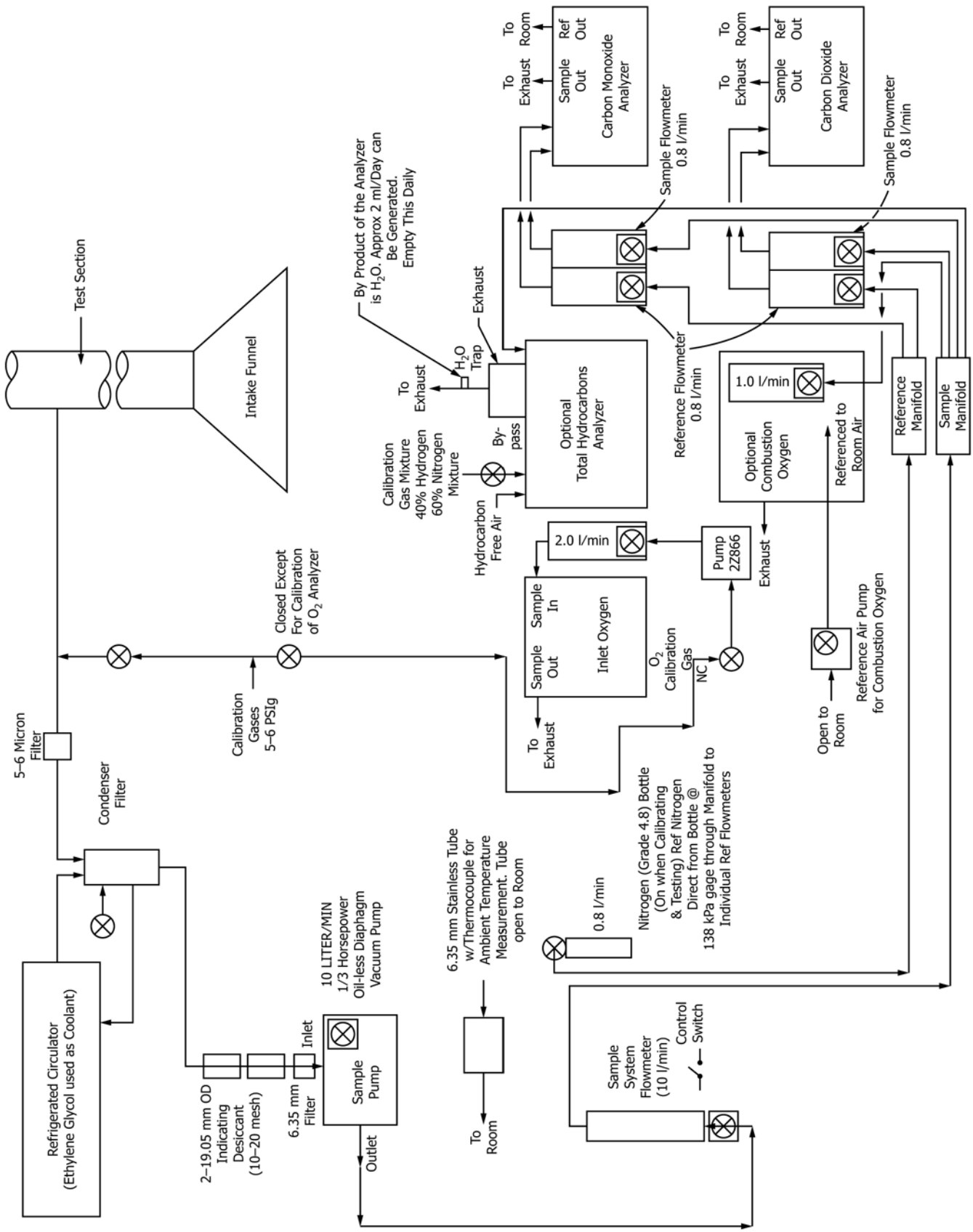

FIG. 4 Flow Diagram of Gas Sampling System

AVA Documents
Document Sharing Hub

Full document details: ASTM E2058-19

method of detection can be used to determine the total gaseous hydrocarbon concentration. This analyzer should have a 10 to 90 % of full-scale response time of 1 s or less and multiple ranges to permit measurements from a full-scale of 10 ppm methane equivalent to 10 000 ppm.

6.7 *Combustion Air Distribution System*—This system shall consist of an air distribution chamber, shown in Fig. 5, and air supply pipes, shown in Figs. 6 and 7.

6.7.1 *Air Distribution Chamber*—This aluminum chamber, shown in Fig. 5, shall contain eight discharge tubes arranged in a circle of 165-mm inside diameter. Each tube shall be aluminum and built to distribute inlet gases (air, O_2, N_2, etc.) to three sets of screens (stainless steel woven wire cloth of 10, 20, and 30 mesh from bottom to top, respectively), for producing a uniform air flow. Inlet air flows downward through the eight discharge tubes, disperses on the bottom plate, then rises through the mesh screens toward the aluminum support cylinder.

6.7.2 *Air Supply Pipes*—These pipes shall consist of an aluminum cylinder, shown in Figs. 3 and 6 extending from the air distribution chamber up to the load platform. This cylinder shall contain a step (see Figs. 6 and 7) to support a quartz pipe. Above the load platform elevation, the quartz pipe (see Figs. 6 and 7) shall supply oxidant to the specimen flame while allowing radiant energy from the IR heating system to reach the specimen surface. The aluminum support cylinder shall be rigidly attached to the distribution chamber, but the quartz pipe shall be removable.

6.8 *Water-Cooled Shield*—To prevent the specimen from being exposed to the IR heaters during the one minute heater stabilization period, there shall be a shield (see Fig. 8) consisting of two aluminum cylinders welded together with an inlet and outlet for water circulation. An electrically-actuated, pneumatic piston shall raise the shield to cover the specimen during test preparation and shall lower the shield within 1 s to expose the specimen at the start of a test.

6.9 *Exhaust System*—The exhaust system shall consist of the following main components: an intake funnel (Figs. 9 and 10), a mixing duct (Fig. 11), a test section (Fig. 12), duct flanges (Fig. 13), and a high temperature blower to draw gases through the intake funnel, mixing duct and test section at flow rates from 0.1 to 0.3 m^3/s (212 to 636 cfm). The intake funnel, mixing duct and test section shall be coated internally with fluorinated ethylene propylene (FEP) resin enamel and finish layers over a suitable primer to form a three layer coating that shall withstand temperatures of at least 200°C.

6.10 *Test Section Instruments:*

6.10.1 *Test Section Thermocouple Probe*—A thermocouple probe, inserted through a test section port, shall be positioned such that the exposed, type K measurement bead is at the center of the test section, at the axial position of the gas sampling port. Fabricate the thermocouple probe of wire no larger than 0.254-mm diameter for measurement of gas temperature with a time response (in the specified exhaust flow) of no more than 1 s and an accuracy of 1.0°C.

6.10.2 *Averaging Pitot Probe and Pressure Transducer*—An averaging Pitot probe, inserted through a test section port 220 to 230 mm downstream of the thermocouple port, shall measure the mass flow rate of the gas stream using at least four sets of flow sensing openings, one set facing upstream and the second downstream and shall be designed for compatibility with the test section diameter. Measure the differential pressure generated by the probe with an electronic pressure transducer (electronic manometer). The measured differential pressure is proportional to the square of the flow rate. Experience has shown that the averaging Pitot probe in this application is reliable (not susceptible to plugging), while minimizing pressure losses in the exhaust system.

6.11 *Heat-Flux Gauge*—For calibration of the IR heating system, use a Gardon type, or equivalent, total heat-flux gauge having a nominal range of 0 to 100 kW/m^2 and a flat, 6 to 8-mm diameter sensing surface coated with a durable, flat-black finish. The body of the gauge shall be cooled by water above the dew point of the gauge environment. The gauge shall be rugged and maintain an accuracy of within ±3 % and a repeatability within 0.5 % between calibrations. Check the calibration of the heat-flux gauge monthly through the use of a black-body oven calibration facility that compares the gauge response to that of a NIST-traceable optical pyrometer. Alternatively, compare the gauge output to that of a reference standard.

6.12 *Digital Data Collection System*—Digitally record the output from the CO, CO_2, hydrocarbon gas, O_2 combustion and O_2 inlet-air analyzers, the load cell, the test section duct thermocouple, and the electronic pressure transducer at 1 s intervals. Time shift the data for the gas concentrations to account for delays within the gas sampling lines and respective instrument response times. The data collection system shall be accurate to within ±1°C for temperature measurement and ±0.01 % of full-scale instrument output for all other channels. The system shall be capable of recording data for at least 1 h at 1-s intervals, although test duration typically is between 8 and 15 minutes.

7. Hazards

7.1 All normal laboratory safety precautions must be followed since the test procedures involve high temperatures and combustion reactions, as well as the use of electric radiant heaters, laboratory glassware, and different types of compressed gases.

7.1.1 Hazardous conditions leading, for example, to burns, ignition of extraneous objects or clothing, and inhalation of combustion products, may exist. During the operation of the apparatus, the operator must use hearing protection and at least shade five welding goggles or glasses. The operator must use protective gloves for insertion and removal of test specimens. Specimens must be removed to a fume hood. Neither the heaters nor the associated fixtures can be touched while hot except with protective gloves.

7.1.2 The exhaust system must be checked for proper operation before testing and must be discharged away from intakes for the building ventilation system. Provision must be made for collecting and venting any combustion products that fail to be collected by the exhaust system.

AVA Documents
Document Sharing Hub

Full document details: ASTM E2058-19

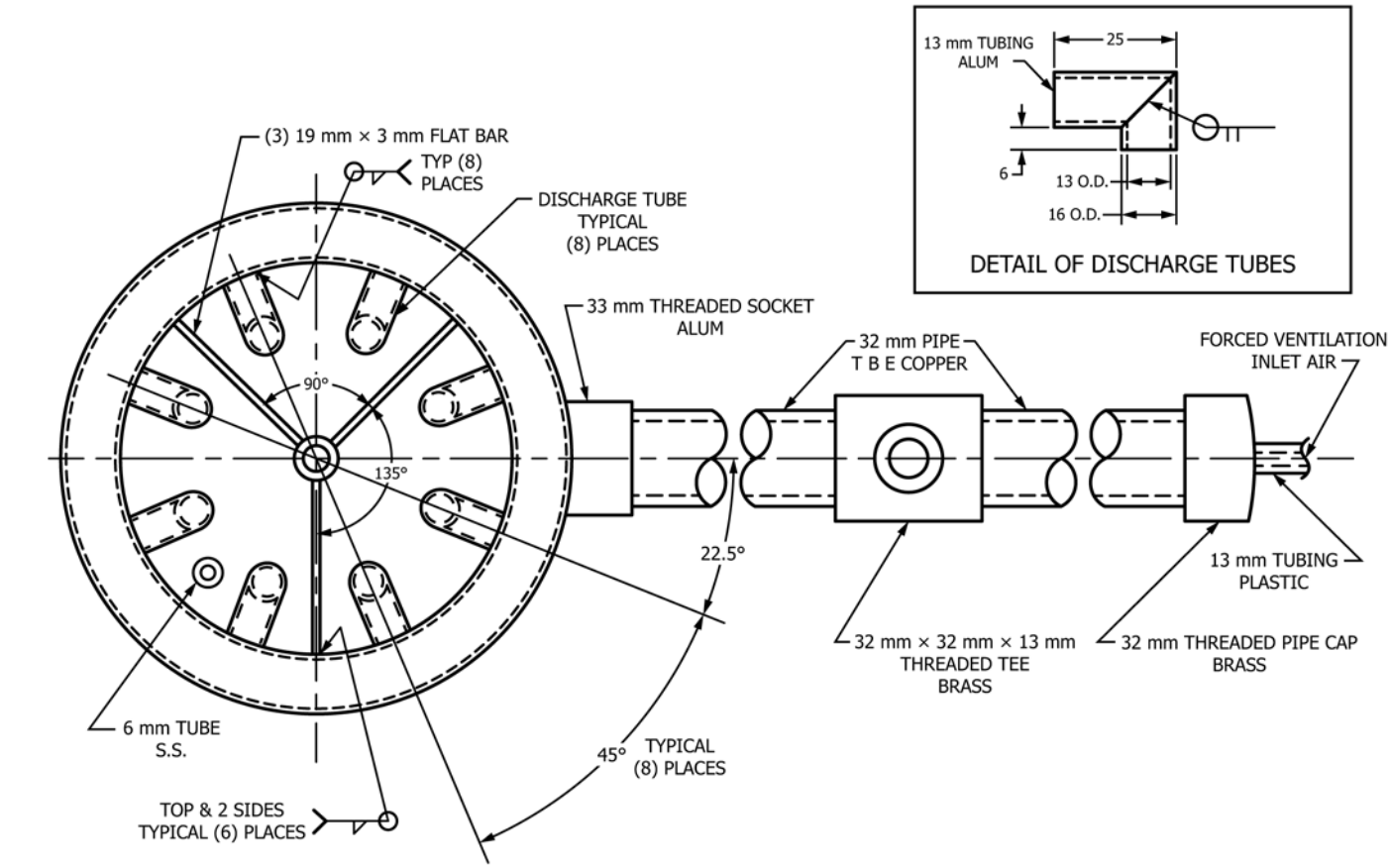

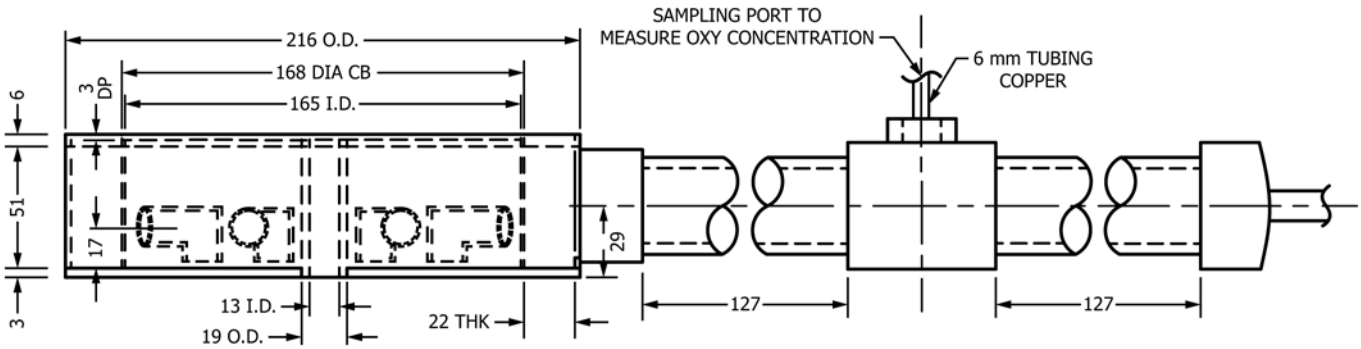

VIEW SHOWING DISCHARGE TUBES

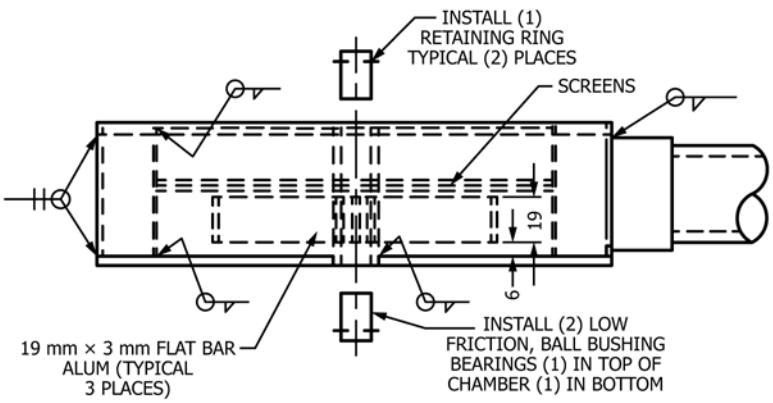

PARTIAL VIEW SHOWING FLAT BARS

FIG. 5 Air Distribution Chamber

Documents
Document Sharing Hub

Full document details: ASTM E2058-19