Designation: E2112 – 07 (Reapproved 2016)

Standard Practice for Installation of Exterior Windows, Doors and Skylights[1]

This standard is issued under the fixed designation E2112; the number immediately following the designation indicates the year of original adoption or, in the case of revision, the year of last revision. A number in parentheses indicates the year of last reapproval. A superscript epsilon (ε) indicates an editorial change since the last revision or reapproval.

INTRODUCTION

This document is intended to provide technical guidance to organizations that are developing training programs for installers of fenestration units in low-rise residential and light commercial structures. The majority of fenestration units selected for installation in these types of structures are certified as meeting specified performance characteristics in standardized laboratory testing. Experience indicates, however, that the performance of fenestration installations is frequently significantly inferior to the performance of the manufactured units in laboratory testing. Installation of fenestration units can significantly influence in-service performance.

The requirements promulgated in this practice have, by consensus, (of individuals with specialized knowledge concerning installation of fenestration units) been identified as necessary to ensure that as-installed performance is roughly equivalent to performance in laboratory testing. The task group responsible for development of this practice recognizes that building owners sometimes, accept as adequate, in-service performance of fenestration installations that are significantly inferior those of the units in laboratory testing. This practice is not intended for use in such circumstances, where owner expectations are modest. The intent of this practice is to provide guidance to those concerned with ensuring that as-installed performance is comparable to the capabilities of the units installed for a solid majority of installations.

A particularly noticeable behavior that indicates deficiencies in installation is rainwater leakage. Rainwater leakage has been the leading reason for dissatisfaction of building owners with performance of fenestration installations. For this reason, this practice places greater emphasis on preventing or limiting rainwater leakage than on any other single performance characteristic.

This practice emphasizes that the water-shedding surfaces of fenestration units must be adequately integrated with adjacent water-shedding surfaces of the building envelope. It does not, however, attempt to promulgate requirements for water-shedding surfaces of building envelopes other than those interfacing with fenestration units. The standard assumes that the basic design of the building's water-shedding system is adequate, that is, that either (*1*) there is a high probability that the outermost building surface will dependably prevent all water entry, or (*2*) the building envelope incorporates an effective concealed barrier that will dependably prevent further intrusion of incidental water that breaches the outermost surface. The practice further assumes that fenestration units can be dependably sealed to, and integrated with, at least one of these surfaces. If the basic design of the building's water-shedding system is inadequate, or does not allow for reliable integration of fenestration units into it, competent installation of the units is unlikely to nullify these deficiencies.

1. Scope

1.1 This practice covers the installation of fenestration products in new and existing construction. For the purpose of this practice, fenestration products shall be limited to windows, sliding patio-type doors, swinging patio type doors, and skylights, as used primarily in residential and light commercial buildings.

1.2 This practice assumes that the installer possesses basic woodworking skills and an understanding of wall and roof construction, sheet metal work, and joint sealant practices.

1.3 This practice attempts to instruct and familiarize the installer with the concepts of both Barrier Systems and

[1] This practice is under the jurisdiction of ASTM Committee E06 on Performance of Buildings and is the direct responsibility of Subcommittee E06.51 on Performance of Windows, Doors, Skylights and Curtain Walls.

Current edition approved Jan. 1, 2016. Published March 2016. Originally approved in 2001. Last previous edition approved in 2007 as E2112 – 07. DOI: 10.1520/E2112-07R16.

Copyright © ASTM International, 100 Barr Harbor Drive, PO Box C700, West Conshohocken, PA 19428-2959. United States

Documents
Document Sharing Hub
Full document details: ASTM E2112-07(2016)

Membrane/Drainage Systems, in order to ensure the continuity of the building envelope. This practice attempts to educate the installer, builder, architect, and other users in the identification and understanding of the water shedding system of the building envelope.

1.4 This practice covers the installation process from pre-installation procedures through post-installation procedures, for single units or factory-mulled multiple units in a single opening. It does not cover the fabrication or assembly of multiple units, whether such fabrication takes place in a factory or at the intended installation site. The installer should check with the manufacturer of factory-assembled units for instructions for anchoring. When using field-mulled units, follow manufacturer's recommendations and make certain that they meet applicable codes. This practice does not cover the selection of appropriate fenestration products for a given application, nor the selection of other products or systems for use in the installation.

1.5 This practice provides minimum requirements that will help to accomplish the installation of fenestration products in an effective manner. Actual conditions in buildings vary greatly and, in some cases, substantial additional precautions may be required. In the event that the manufacturer's installation instructions provided with the product conflict with requirements of this practice, the manufacturer's instructions shall prevail. This practice is not intended to limit or exclude other new procedures that may refine or further improve the effectiveness of fenestration installation.

1.5.1 This practice is intended to be used for background information in order to develop training manuals and training programs. Further, this practice attempts to consolidate and unify the various steps of construction, tying together the various trades involved with the continuity between fenestration products and the building envelope.

1.6 The text of this practice references notes and footnotes that provide explanatory material. These notes and footnotes (excluding those in tables and figures) shall not be considered as requirements of this practice.

1.7 The values stated in inch-pound units are to be regarded as standard. The values given in parentheses are mathematical conversions to SI units that are provided for information only and are not considered standard.

1.8 This standard has not been created to address all issues related to every possible installation situation one might experience in the field. Furthermore, this practice does not purport to provide fail-safe installation methods, assurance or protection against installation deficiencies, or a standard by which architects can specify or ensure delivered performance.

NOTE 1—There are no ISO standards covering the primary subject matter of this practice.

1.9 *This practice does not purport to address all of the safety concerns, if any, associated with its use. It is the responsibility of the user of this standard to establish appropriate safety and health practices and to determine the applicability of regulatory limitations prior to use.* For specific precautionary statements, see Section 5, Related Procedures. Where a lead hazard is known or suspected, refer to *ASTM Standards on Lead Hazards Associated with Buildings* and to applicable state and federal regulations. Where an asbestos hazard is known or suspected, refer to the *ASTM Manual on Asbestos Control*, and to applicable state and federal regulations.

1.10 *Table of Contents:*

	Section
Scope	1
Table of Contents	1.10
Referenced Documents	2
Terminology	3
Definitions	3.1
Description of Terms Specific to this Standard	3.2
Abbreviations	3.3
Significance and Use	4
Related Issues and Procedures	5
Continuity with the Weather Barrier Systems	5.1
Joints and Anchorages	5.2
Moisture Entrapment	5.3
Weather Resistant Barrier	5.4
Weatherability	5.5
Construction Sequence	5.6
Construction Damage	5.7
Inspection	5.8
Rough Opening	5.9
Rough Opening Size	5.9.1
Insulating or Filling the Rough Opening Gap	5.9.2
Materials Protection	5.10
Cleaning and Maintenance	5.11
Dissimilar Materials	5.12
Flashing Requirements	5.13
Fastening Systems/Anchorage	5.14
Shimming	5.15
Panning Systems and Subsills for Weatherability	5.16
Pre-Installation Procedures	5.17
Sealants—Selection and Use	5.18
Window Cleaner Anchors and Related Safety Hardware	5.19
Continuity Between the Fenestration Products and Other Components of the Building Envelope	6
Water Shedding Strategies of Wall and Roof Systems	7
Concept of Surface Barrier Systems and Membrane/Drainage Systems	7.1
Surface Barrier Systems	7.1.1
Membrane/Drainage Systems	7.1.2
Identification of Systems	7.2
Installation Methods For Windows	8
Windows in Walls Utilizing a Membrane/Drainage System	8.1
Windows with Perimeter Mounting Flanges (Nail Fins) in Drainage Type Wall Construction	8.1.1
Flange Types	8.1.1.1
Selection of Installation Method	8.1.1.2
Method A	8.1.1.3.1
Method B	8.1.1.3.2
Method A1	8.1.1.3.3
Method B1	8.1.1.3.4
Non-Finned Windows in Membrane/Drainage Type Walls	8.1.2
Windows in Walls Utilizing a Barrier Wall System (Sealant Method)	8.2
Windows in Walls Utilizing an Exterior Barrier System (EIFS or Direct Applied)	8.3
Special Considerations	8.4
Aluminum Framed Windows	8.4.1
Vinyl Framed Windows	8.4.2
Replacement Window Installation	8.5
Partial Window Replacement for Existing Integral Flange Windows	8.5.1
Partial Replacement of Mill Shop Wood Windows	8.5.2
Complete Window Replacement	8.5.3
Destructive Window Replacement (Fin Type)	8.5.3.1
Non-Destructive Window Replacement (Non-Fin Type)	8.5.3.2

Documents
Document Sharing Hub

Full document details: ASTM E2112-07(2016)

Installation Methods for Doors	9
Doors in Walls Utilizing a Membrane/Drainage System	9.1
Doors with Perimeter Mounting Flanges (Nailing Fins) in Drainage Type Wall Construction	9.1.1
Flange Types	9.1.1.1
Selection of Installation Method	9.1.1.2
Method A	9.1.1.4.1
Method B	9.1.1.4.2
Method A1	9.1.1.4.3
Method B1	9.1.1.4.4
Hinged Swing (Non-finned) Doors in Membrane/Drainage Type Walls	9.1.2
Installation Methods for Skylights	10
Product Types	10.1
Flashing Procedures	10.2
Aluminum/Copper Sheet Flashing	10.3
Aluminum/Copper Step Flashing (Fabricated or Engineered)	10.4
Membrane Flashing	10.5
Post-Installation Procedures	11
Keywords	12
Air Barrier Foam Sealant Used in the Rough Opening Gap	Annex A1
Emergency Escape and Rescue Requirements	Annex A2
Minimum Height Requirements for Interior Height of Pan Flashing	Annex A3
Sealants	Annex A4
Window/Door Flashing Types	Appendix X1
Cautions for Installation	Appendix X2
Bibliography/Other Referenced Installation Guides	Appendix X3

2. Referenced Documents

2.1 *ASTM Standards:*[2]

A123/A123M Specification for Zinc (Hot-Dip Galvanized) Coatings on Iron and Steel Products

B456 Specification for Electrodeposited Coatings of Copper Plus Nickel Plus Chromium and Nickel Plus Chromium

B663 Specification for Silver-Tungsten Carbide Electrical Contact Material

B766 Specification for Electrodeposited Coatings of Cadmium

C717 Terminology of Building Seals and Sealants

C755 Practice for Selection of Water Vapor Retarders for Thermal Insulation

C794 Test Method for Adhesion-in-Peel of Elastomeric Joint Sealants

C834 Specification for Latex Sealants

C920 Specification for Elastomeric Joint Sealants

C1085 Specification for Butyl Rubber Based Solvent-Release Sealants (Withdrawn 1997)[3]

C1193 Guide for Use of Joint Sealants

C1281 Specification for Preformed Tape Sealants for Glazing Applications

C1299 Guide for Use in Selection of Liquid-Applied Sealants (Withdrawn 2012)[3]

C1311 Specification for Solvent Release Sealants

C1382 Test Method for Determining Tensile Adhesion Properties of Sealants When Used in Exterior Insulation and Finish Systems (EIFS) Joints

C1397 Practice for Application of Class PB Exterior Insulation and Finish Systems (EIFS) and EIFS with Drainage

D779 Test Method for Determining the Water Vapor Resistance of Sheet Materials in Contact with Liquid Water by the Dry Indicator Method

D1970/D1970M Specification for Self-Adhering Polymer Modified Bituminous Sheet Materials Used as Steep Roofing Underlayment for Ice Dam Protection

D2822/D2822M Specification for Asphalt Roof Cement, Asbestos-Containing (Withdrawn 2016)[3]

E283 Test Method for Determining Rate of Air Leakage Through Exterior Windows, Curtain Walls, and Doors Under Specified Pressure Differences Across the Specimen

E331 Test Method for Water Penetration of Exterior Windows, Skylights, Doors, and Curtain Walls by Uniform Static Air Pressure Difference

E547 Test Method for Water Penetration of Exterior Windows, Skylights, Doors, and Curtain Walls by Cyclic Static Air Pressure Difference

E631 Terminology of Building Constructions

E783 Test Method for Field Measurement of Air Leakage Through Installed Exterior Windows and Doors

E1105 Test Method for Field Determination of Water Penetration of Installed Exterior Windows, Skylights, Doors, and Curtain Walls, by Uniform or Cyclic Static Air Pressure Difference

2.2 *AAMA Standards:*[4]

502 Voluntary Specification for Field Testing of Windows and Doors

800 Voluntary Specifications and Test Methods for Sealants

808.3 Voluntary Specifications for Exterior Perimeter Sealing Compounds

809.2 Voluntary Specification for Non Drying Sealant

850 Fenestration Sealants Guide Manual

2.3 *ANSI/AAMA/WDMA Standard:*[4]

101/I.S.2 Voluntary Specifications for Aluminum, Vinyl (PVC) and Wood Windows and Glass Doors

2.4 *AAMA/WDMA Standard:*[4]

1600/IS7 Voluntary Specifications for Roof Windows and Skylights

2.5 *ANSI/ASME Standard:*[5]

A39.1 Standard, Safety Requirements for Window Cleaning

2.6 *ANSI/EIMA Standard:*[5]

99-A-200 Exterior Insulation and Finish Systems (EIFS)

2.7 *ANSI/ISDI Standard:*[5]

102 Insulated Steel Door Systems—Installation Standard

2.8 *CSA Standards:*[6]

A440.4 Fenestration Product Installation

A440-M90 Windows—A National Standard of Canada

[2] For referenced ASTM standards, visit the ASTM website, www.astm.org, or contact ASTM Customer Service at service@astm.org. For *Annual Book of ASTM Standards* volume information, refer to the standard's Document Summary page on the ASTM website.

[3] The last approved version of this historical standard is referenced on www.astm.org.

[4] Available from American Architectural Manufacturers Association (AAMA), 1827 Walden Office Square, Suite 550, Schaumburg, IL 60173-4268, http://www.aamanet.org.

[5] Available from American National Standards Institute (ANSI), 25 W. 43rd St., 4th Floor, New York, NY 10036, http://www.ansi.org.

[6] Available from Canadian Standards Association (CSA), 178 Rexdale Blvd., Toronto, ON M9W 1R3, Canada, http://www.csagroup.org.

AVA Documents
Document Sharing Hub

Full document details: ASTM E2112-07(2016)

2.9 *CPSC Standard:*[7]

16 CFR 1201 USA Consumer Product Safety Commission, Code of Federal Regulations; Part 1201, Safety Standard for Architectural Glazing Materials, 1977

2.10 *WDMA Standard:*[8]

I.S.4 Industry Standard for Water-Repellent Preservative Treatment for Millwork

2.11 *OSHA Standards:*[9]

29 CFR 1926.62 Lead in Construction Standard

29 CFR 1926.1101 Asbestos Construction Standard

3. Terminology

3.1 *Definitions*—Definitions are in accordance with Terminology E631 and Terminology C717, unless otherwise specified.

3.2 *Definitions of Terms Specific to This Standard:*

3.2.1 *accessory groove, n*—a shape included on a fenestration product frame that is designed to mate with installation accessories.

3.2.2 *air barrier, n*—the assembly of materials used in building construction to reduce or retard the uncontrolled passage of air into and out of the building.

3.2.3 *air barrier foam sealant, n*—an aerosol foam product dispensed as a bead into the air gap area around the fenestration perimeter to reduce the infiltration or exfiltration of air past the fenestration product.

3.2.4 *air leakage, n*—also referred to as *air infiltration*. According to Terminology E631 in buildings, the passage of uncontrolled air through cracks or openings in the building envelope or its components, such as ducts, because of air pressure or temperature difference.

3.2.5 *anchor line (or anchor point), n*—a line (or point) of reference on a fenestration product or the building, or both, where attachment is made.

3.2.6 *annealed glass, n*—raw glass used as a glazing product.

3.2.6.1 *Discussion*—Further processing is required to transform annealed glass into safety glazing material.

3.2.7 *anodic finishes, n*—clear or colored coatings composed of aluminum oxide that are electrolytically deposited and are an integral part of the aluminum substrate.

3.2.7.1 *Discussion*—Careful control permitted by the electrolytic anodizing process provides substantial improvement over a natural oxide film due to greater thickness, density, and hardness of these factory-produced finishes. Pre-anodic chemical treatments clean and prepare the aluminum for the anodic finish. The Aluminum Association classifies architectural anodic coatings depending on coating thickness and recommended use. Further detailed information and specifications on anodic finishes is available from the Aluminum Association and the American Architectural Manufacturers Association.

3.2.8 *apron, n*—a molding applied horizontally to the wall, directly below the window sill and used to hide the rough edge of the drywall or plaster below the window framing.

3.2.9 *backer rod, n*—a material placed into a joint, primarily to control the depth of the sealant, also serves as a bond breaker.

3.2.10 *barrier wall system, n*—a wall system that is intended to manage all water at the exterior surface.

3.2.10.1 *Discussion*—These wall systems consist of the exterior surface of the wall and the exterior surface of the fenestration product, usually connected by a sealant joint.

3.2.11 *bead, n*—sealant applied in a joint, such as sealant bead, glazing bead, and so forth. According to Terminology E631, in glazing, (*1*) a strip of metal or wood used around the periphery of a pane of glass to secure it in place (also referred to as a stop) and (*2*) a strip of sealant, glazing compound, or putty.

3.2.12 *bite, n*—amount of overlap between the stop and the panel or light. According to Terminology E631, the distance that the surround member (rail or stile) overlaps the glazing.

3.2.13 *blind nailing, n*—nailing in such a way that the nail heads are not visible on the face of the finished work.

3.2.14 *blind stop, n*—a rectangular molding attached to the side and head of a window to serve as a stop for storm windows and screens.

3.2.15 *block frame fenestration product (sometimes called box frame), n*—a type of non-finned fenestration product (either window or door) that has no factory-applied moldings and that is installed into the rough opening either by driving fasteners through shimmed side jambs or by use of installation clips or brackets.

3.2.15.1 *Discussion*—Exterior moldings or casings may be supplied with the fenestration unit (that is, by the manufacturer) for installation after the unit is secured in the rough opening. It is generally easier to ensure effective integration of a block-frame unit's water-shedding surfaces with the weather resistant barrier (WRB) of a membrane/drainage wall system than it is to accomplish the same task with a non-finned unit to which exterior moldings have been factory-installed.

3.2.15.2 *Discussion*—Block-frame windows are commonly used in most of the Canadian provinces. They are relatively rare in residential construction in the United States, where nailing flange windows and windows with factory-applied brick moldings are more common.

3.2.16 *bond breaker, n*—a material used to prevent three-sided adhesion in sealant joints.

3.2.17 *brick mold, n*—an exterior trim molding which forms a boundary between bricks or other siding and a fenestration product.

3.2.17.1 *Discussion*—Brick mold fenestration units are a type of non-finned product (either window or door) with factory-supplied exterior moldings that are brick moldings. The unit may be supplied without the brick moldings attached, and intended for installation as a block-frame unit. Where

[7] Available from U.S. Government Publishing Office, 732 N. Capitol St., NW, Washington, DC 20401-0001, http://www.gpo.gov.

[8] Available from Window & Door Manufacturers Association (WDMA), 330 N. Wabash Ave., Suite 2000, Chicago, IL 60611, http://www.wdma.com.

[9] Available from Occupational Safety and Health Administration (OSHA), 200 Constitution Ave., Washington, DC 20210, http://www.osha.gov.

AVA Documents
Document Sharing Hub

Full document details: ASTM E2112-07(2016)

commonly, the brick moldings are factory-applied, and the unit is secured in the rough opening by nailing through the brick moldings into framing members.

3.2.17.2 *Discussion*—Ensuring that the water shedding surfaces of the fenestration unit are effectively integrated with the WRB of a membrane/drainage wall system can be challenging. This practice does not recognize the brick moldings on fenestration units as being permanently effective water-shedding surfaces; finger joints in wood brick moldings may open over time unless paint maintenance is meticulous, and upper-corner miter joints may open sufficiently to permit some water intrusion. This practice assumes that the water-shedding surfaces of a brick mold fenestration unit are the window sash or door, the top and side jambs of the unit, and the unit's sill. This practice further recognizes, however, that over the service life of the fenestration unit, water leakage may occur between the side jambs and sill, which is why pan flashings are recommended for use with these units (see 8.2).

3.2.18 *buck, n*—a rough wooden framework, built into a window or door opening in a concrete or masonry wall, to which the window or door frame is secured.

3.2.19 *building envelope, n*—the exterior of a building.

3.2.19.1 *Discussion*—According to Terminology E631, the outer elements of a building, both above and below ground, that divide the external from the internal environments.

3.2.20 *building paper, n*—a membrane material made of cellulose paper impregnated with asphalt (to inhibit passage of liquid water through the material) and which is commonly used as a concealed weather-resistive barrier in membrane/drainage walls.

3.2.20.1 *Discussion*—Typically installed after windows and window flashing. Block or brick-mold windows may be installed after building paper (defer to manufacturer's instructions).

3.2.21 *buttering, n*—application of sealant compound to the flat surface of a member before placing the member in position.

3.2.22 *cap/capping, n*—see *pan/panning*.

3.2.23 *casing, n*—a trim molding used around doors and windows to cover the area between the wall and the edge of the jamb.

3.2.24 *caulk (non-elastomeric), n*—see *sealant*.

3.2.25 *cementitious material, n*—material binding aggregate particles together into a heterogeneous mass.

3.2.26 *channel, n*—a three-sided, U-shaped opening in sash or frame to receive a light or panel.

3.2.26.1 *Discussion*—In sash or frame units in which the light or panel is retained by a removable stop.

3.2.27 *channel depth, n*—the measurement from the bottom of the channel to the top of the stop, or measurement from sight line to base of channel.

3.2.28 *channel glazing, n*—the sealing of the joints around lights or panels set in a U-shaped channel employing removable stops.

3.2.29 *channel width, n*—the measurement between stationary and removable stops in a U-shaped channel at its widest point.

3.2.30 *cladding system, n*—the aesthetic covering of a building.

3.2.30.1 *Discussion*—According to Terminology E631, material assembly applied to a building as a non-load-bearing wall, or attached to a wall surface as a protective and ornamental covering.

3.2.31 *cohibition point, n*—a location where movement is restricted between the sash and the frame, such as at a hinge or lock.

3.2.32 *complete window replacement, n*—the installation of a replacement window where the previously-installed window is completely removed.

3.2.33 *composite materials, n*—fenestration members which contain two or more materials, structurally combined or connected so as to perform structurally as a singular material such as poured and de-bridged aluminum shapes, fiberglass and man-made wood products.

3.2.34 *compound, n*—a formulation of ingredients, usually grouped as vehicle or polymer pigment and fillers to produce caulking compounds and elastomeric joint sealants.

3.2.35 *consistency, n*—degree of softness or firmness of a compound as supplied in the container.

3.2.35.1 *Discussion*—Consistency varies according to method of application, such as gun, knife, trowel, and so forth.

3.2.36 *construction documents, n*—architectural drawings, specifications, shop drawings, manufacturing details, test reports, contracts, building permits, applicable codes.

3.2.37 *counter-flashing, n*—horizontally applied sheet (flashing) material that joins layers of flashings where they join the weather resistant barrier, enhancing drainage by gravity.

3.2.38 *cripple stud, n*—a short stud above or below a window or door opening.

3.2.39 *cross shims, n*—see *shim*.

3.2.40 *curing, n*—a chemical process which over time results in the ultimate properties of a finish or other material.

3.2.41 *curing agent, n*—one part of a two-part sealant which, when added to the base, will cause the base to change its physical state.

3.2.42 *drainage wall system, n*—see *membrane/drainage system*.

3.2.43 *drip, n*—any exterior horizontal course or molding that projects to the weather side of a wall or other surface to throw off water.

3.2.43.1 *Discussion*—A small drip groove is sometimes used on the underside of a drip cap or window sill to prevent water from running back under the cap or window.

3.2.44 *drip cap, n*—a molding or flashing commonly installed over windows and doors to direct water away from the building in order to prevent seepage; also called a drip molding.

3.2.44.1 *Discussion*—A rounded or beveled metal strip attached to the bottom of an exterior door to prevent water from draining or blowing under the door.

AVA Documents
Document Sharing Hub

Full document details: ASTM E2112-07(2016)

3.2.45 *drying, n*—the process of removing water from a material; usually accomplished with heated air.

3.2.45.1 *Discussion*—According to Terminology E631, the process of developing, solely by evaporation of volatile ingredients, ultimate properties of a finish or other material over a specified period of time; compare *curing*.

3.2.46 *durometer, n*—an instrument used to measure hardness of a material.

3.2.46.1 *Discussion*—Shore hardness is a commonly used hardness measurement scale.

3.2.47 *egress, n*—a means of exiting a room or building in an emergency.

3.2.47.1 *Discussion*—An egress window is one that is large enough for an adult to exit the room in case of an emergency. The size is defined by national or local building codes.

3.2.48 *EIFS, n*—see *exterior insulation and finish system.*

3.2.49 *elastomer, n*—an elastic, rubber-like substance, such as natural or synthetic rubber.

3.2.50 *elastomeric sealant, n*—a sealant that returns to its initial dimensions and shape after substantial deformation.

3.2.51 *end dam, n*—any means provided to stop the flow of water out of the ends of a sill, panning system or subsill and into the wall cavity, such as sealants, upstands, plates, or gasketing.

3.2.52 *exterior insulation and finish system (EIFS), n*—according to Practice C1397, a non-load-bearing outdoor wall finish system consisting of a thermal insulation board, an attachment system, a reinforcement system, and a compatible finish.

3.2.52.1 *Discussion*—ANSI/EIMA Standard 99-A-200 further defines EIFS as consisting of 5 elements: adhesive, foam, reinforcement fiberglass mesh, base coat, and finish coat, which does not include exterior joint sealant per Terminology E631.

3.2.53 *fenestration product, n*—any transparent or translucent glazing material plus associated sash, frame, mullions, and dividers, in the envelope of a building, including but not limited to windows, sliding glass doors, French doors, skylights, curtain walls, and garden windows.

3.2.54 *flashing, n*—sheet material, integrated with the water-resistive barrier, that bridges and protects the joint (gap) between the window or door frame members and the adjacent construction for the purpose of preventing water penetration by draining water away from the window or door. For further discussion, see Appendix X1—Window/Door Flashing Types. (See also *pan flashing*.)

NOTE 2—Flashing is to be water-resistive and durable for the intended use. Flashing is to be a single component or a series of connected components that provides a mechanism to direct incidental water penetration to the exterior. Flashing is used to direct incidental water to the exterior either directly or via the wall cavity between the water-resistive barrier and cladding to provide a water-shedding system.

3.2.55 *flashing system, n*—integrated system of flashings intended to move incidental water to the building exterior or to the drainage plane.

3.2.56 *frame, n*—the outside perimeter of a window or door consisting of 2 side jamb members, 1 head member, and 1 sill member which holds the glass lites or sash panels.

3.2.56.1 *Discussion*—According to Terminology E631, an assembly of structural members that surrounds and supports the sash, ventilators, doors, panels, or glazing that is installed into an opening in a building envelope or wall.

3.2.57 *frame liners, n*—covers or track assemblies, typically of vinyl or aluminum, designed to fit into an existing fenestration product frame for the purpose of accepting new sash or glazing. (Also known as *jamb liners*.)

3.2.58 *galvanic corrosion, n*—a form of deterioration of metal resulting from the electrochemical reaction that occurs when certain dissimilar metals are in contact with each other in the presence of moisture.

3.2.59 *glazing, n*—window sash and door panel in-fills that contain glass or glass-like materials.

3.2.59.1 *Discussion*—According to Terminology E631, a material installed in a sash, ventilator, or panel such as glass, plastic, and so forth.

3.2.60 *head, n*—the top of a fenestration product.

3.2.60.1 *Discussion*—According to Terminology E631, an upper horizontal member of a window or door frame.

3.2.61 *head expander, n*—an inverted U-channel fenestration installation accessory that may be fitted to the head of a replacement window to accommodate differences between rough opening height and product height.

3.2.62 *head flashing, n*—sheet material, integrated with the water-resistive barrier, that bridges and protects the joint (gap) between the window or door frame members at the head, and the adjacent construction for the purpose of preventing water penetration by draining water away from the window or door. For further discussion, see Appendix X1—Window/Door Flashing Types.

3.2.63 *header, n*—a horizontal structural member (beam) that supports the load over an opening, such as that of a door or window. The header transfers that load to the vertical members at the sides of the opening.

3.2.64 *house wrap, n*—a polymer-based sheet material provided in a variety of dimensions and used as a water-resistive barrier (user of this product should defer to manufacturer's instructions).

3.2.65 *inorganic, n*—designating or composed of materials that are derived from neither living organisms nor hydrocarbon sources.

3.2.65.1 *Discussion*—Most inorganic compounds do not contain carbon and are derived from mineral sources. Calcium carbonate (that is, limestone) is generally classified as an inorganic material, although it contains carbon. Fossil or non-fossil remnants of dead organisms (for example, mollusks, limestone) are generally classified as inorganic materials provided that they are not composed of hydrocarbon molecules.

3.2.66 *installation accessories, n*—components that are specifically designed to *trim out* the product with various surrounding constructions.

AVA Documents
Document Sharing Hub

Full document details: ASTM E2112-07(2016)

3.2.67 *installation holes, n*—holes in window or door frames that are fabricated by the manufacturer to locate and accommodate installation fasteners.

3.2.68 *installer, n*—for the purpose of this practice the installer, of fenestration products is person or persons who do the installation labor and those who supervise such labor.

3.2.69 *integral fin, n*—a permanent appendage protruding from the body of a window or door, used as either an installation attachment feature or part of the weather resistant barrier interface between the product and the wall, or both. The term "fin" is also known as "flange."

3.2.69.1 *Discussion*—Some fin designs allow them to be folded against the fenestration frame for shipping and *folded up* for installation.

3.2.70 *isolation coating, n*—a material which separates two adjacent materials to prevent galvanic corrosion of one of the materials by the other material. (See also *galvanic corrosion*.)

3.2.71 *jack stud, n*—a stud that does not extend from floor to ceiling, and which supports a lintel on its (the stud's) upper end.

3.2.71.1 *Discussion*—Jack studs are used in conjunction with king studs, and form the vertical surfaces of rough openings.

3.2.72 *jamb, n*—a vertical member of a fenestration product frame (side jamb); or the horizontal member across the top of a fenestration product frame (head jamb).

3.2.73 *jamb flashing, n*—sheet material, integrated with the weather-resistive barrier, that bridges and protects the joint (gap) between the window or door frame members at the jambs, and the adjacent construction for the purpose of preventing water penetration by draining water away from the window or door. For further discussion, see Appendix X1—Window/Door Flashing Types.

3.2.74 *king stud, n*—the full length stud next to a door or window opening to which the jack stud or trimmer and lintel are nailed.

3.2.75 *level, n*—having a horizontally flat, even surface with no irregularities and no vertical tilt.

3.2.75.1 *Discussion*—No part of the surface is higher or lower than any other part. The end points of a line drawn on a level surface are equal distances from the center of the earth.

3.2.76 *lintel, n*—a horizontal member above a window or door that supports the exterior wall surface such as brick veneer.

3.2.77 *lite, n*—another term for a pane of glass used in a window; sometimes spelled light.

3.2.77.1 *Discussion*—According to Terminology E631, lite is one piece of glazing (preferred term); (synonym: *pane*).

3.2.78 *mastic/roofing mastic, n*—water-proofing material used to seal or decorate.

3.2.78.1 *Discussion*—According to Terminology E631, a material composition that, after application as a thin layer, is converted to a solid protective, or decorative, or functional adherent film.

3.2.79 *membrane/drainage system, n*—a wall system employing a concealed weather resistant barrier in which the exterior building surface is not the sole method of protecting the building from moisture penetration; that is, stucco, brick veneer, siding.

3.2.79.1 *Discussion*—The waterproofing and weatherability of the fenestration product is integrated into the system and is waterproofed and sealed to a surface that is behind the exterior building surface. The fenestration product is usually integrated (sealed) to an underlayment membrane or flashing system which is a weather resistant barrier that is not exposed directly to the weather. Incidental moisture that is collected at the underlayment membrane or flashing is drained to the exterior at the bottom most locations of each floor/story/level. Fenestration products and other wall penetrations are typically integrated (sealed) to the membrane, underlayment, or flashing system such that the membrane/drainage system provides continuous protection against wall moisture penetration. See also *primary seal*.

3.2.80 *mill finish aluminum, n*—uncoated aluminum that possesses a silvery, natural finish.

3.2.80.1 *Discussion*—This finish protects aluminum against most atmospheric corrosion. Atmospheric or certain job site conditions may affect the surface appearance of mill finish aluminum.

3.2.81 *modular opening (M.O.), n*—nominal (callout) opening.

3.2.82 *modular size (M.S.), n*—nominal (callout) size.

3.2.83 *molding, n*—a strip of wood or other material having a rounded or otherwise decorative surface used to conceal joints or to accent and highlight other surfaces.

3.2.84 *mullion, n*—a slender bar separating the compartments or apertures in a screen or window.

3.2.85 *multiple units, n*—single fenestration products mulled together to form a larger unit.

3.2.86 *muntin, n*—grids, or grilles

3.2.87 *new installation, n*—installation of a fenestration product in a new building or wall.

3.2.88 *non-fin window, n*—a fenestration product that has no integral appendage (fin) attached to the body of the window or door for the purposes of installation or air/water resistance. (Also called *block frame* or *box frame*.) See discussion under *block frame fenestration product*.

3.2.89 *organic, n*—designating any material derived from hydrocarbon sources (for example, petroleum, coal, or natural gas) or from living organisms (for example, carbohydrates, proteins, or lipids).

3.2.90 *organic finishes, n*—organic coatings such as paints, enamels, and resins having a wide range of colors achieved through the addition of pigments.

3.2.91 *pan flashing, n*—a type of flashing used at the base of rough opening to divert incidental water to the exterior or to the exterior surface of a concealed WRB.

NOTE 3—Pan flashings have upturned legs at the interior edge and ends of the rough opening to form a three-sided *pan*. They are intended to

AVA Documents
Document Sharing Hub

Full document details: ASTM E2112-07(2016)

collect and drain water toward the exterior, including water that may enter through the window unit (for example, between the jambs and sill) or around the window (between the rough opening and the fenestration). The pan flashing must be integrated with other flashings and the window assembly to capture water that may otherwise penetrate to the sill framing and allow it to freely drain to the exterior. The window, flashings, and pan are to be sealed in a manner that reliably inhibits air and moisture flow to the interior.

3.2.92 *pan or panning, n*—cosmetic covering, usually found on the exterior of the fenestration product to achieve aesthetic sight lines or to integrate the fenestration product system into the building surface or weatherproofing system.

3.2.92.1 *Discussion*—If panning is being used for weatherability, the panning is not considered cosmetic, but part of the window system.

3.2.93 *pane, n*—see *lite*.

3.2.94 *partial window replacement, n*—the installation of a replacement window where a component of the previously-installed window frame will remain.

3.2.95 *plumb, n*—to make vertical.

3.2.95.1 *Discussion*—Aligned with an imaginary line through the center of the earth and the point of measurement.

3.2.96 *primary seal, n*—the seal beyond which no water is intended to pass.

3.2.96.1 *Discussion*—This is the location included in the building envelope construction which forms a water resistant barrier that is ultimately responsible for maintaining water impermeability between the interior and exterior of a building envelope.

3.2.97 *prime window (primary window), n*—the first (main) window, completely installed in a rough opening, which is designed to function as the sole fenestration product.

3.2.97.1 *Discussion*—This is contrasted to a storm window, which serves as a secondary window in conjunction with a primary window.

3.2.98 *pultrusion, n*—fiberglass reinforced polymer (plastic) structural members having a constant cross-section.

3.2.98.1 *Discussion*—Pultruded fenestration product members are typically polyester polymer reinforced by continuous fiberglass filaments.

3.2.99 *rabbet, n*—a two-sided L-shaped opening used on a face glazed window sash to receive the glass.

3.2.100 *R-point, n*—reference anchoring point which has a rigidity (strength) equal to double that of other anchors.

3.2.100.1 *Discussion*—This may be achieved by using two anchors instead of one or by using an anchor that is twice as rigid as those used at other points.

3.2.101 *R-value (thermal resistance), n*—(*1*) the resistance of a material to the flow of heat from warmer to cooler points. (*2*) a measure of thermal resistance, usually applied to insulation and other homogeneous materials.

3.2.101.1 *Discussion*—When applied to non-homogeneous combinations of building materials such as wall systems and fenestration products, the *effective R-value* is the inverse of the system U-factor (the sum of the individual component area-weighted thermal transmission values (that is, effective R-value = $1/U_{system}$, where $U_{system} = (U_1A_1 + U_2A_2 + \ldots)/(A_1 + A_2 + \ldots)$), where 1, 2, and so forth represent the specific components of the system or product).

3.2.102 *rack, v*—by application of force to adjust the form of a fenestration unit or the sash of a fenestration unit with respect to either: (*1*) squareness within a flat plane or (*2*) deviation from a flat plane (that is, twist).

3.2.102.1 *Discussion*—The term can be used to indicate adjustment to or from squareness and flatness, but is more commonly used to indicate the latter (that is, adjustment to an out-of-square or out-of-flat condition). The term is also sometimes used to denote unintentional application of force that deforms a unit or sash to an out-of-square or out-of-plane condition.

3.2.103 *release agent, n*—a petroleum-based liquid chemical, usually spray applied to a wall form or fixture, that prevents cementitious material from adhering to it.

3.2.104 *remodel, n*—to enhance the aesthetics and livability of a building by replacing or reconditioning its components.

3.2.104.1 *Discussion*—According to Terminology E631, to replace or improve a building or its parts.

3.2.105 *replacement installation, n*—installation of a fenestration product which is designed for replacement of existing similar type product, by either destructive or non-destructive installation methods.

3.2.106 *replacement window, n*—a window that is designed for and subsequently installed after removal of all or part of a previously installed window.

3.2.107 *retrofit, n*—according to Terminology E631, to add new materials or equipment not provided at the time of original construction.

3.2.108 *reveal, n*—the part of the edge of a door or window frame or jamb not covered by the casing.

3.2.109 *roof, n*—the top cover of a building; includes the roofing system.

3.2.109.1 *Discussion*—According to Terminology E631, roofing system—assembly of interacting components designed to weatherproof, and sometimes to insulate, the roof surface of a building.

3.2.110 *roof window, n*—sloped fenestration product with an operable sash.

3.2.111 *rough opening, n*—an unfinished fenestration opening in the building envelope.

3.2.112 *rough opening gap, n*—the space between the rough opening and the fenestration product frame.

3.2.113 *safety glazing materials, n*—materials that reduce the possibility of severe injury upon accidental impact. These materials shall meet 16 CFR 1201 and ANSI Z97.1.

3.2.114 *sash, n*—the moveable portion of an operable window.

3.2.114.1 *Discussion*—According to Terminology E631, an assembly of one or more lites of glazing, encompassed by surrounding edge members, which when operable, slides in the plane of the window. In the wood window industry, the term *sash* is used regardless of the mode of operation.

AVA Documents
Document Sharing Hub

Full document details: ASTM E2112-07(2016)

3.2.115 *seal (plug seal), n*—weather barrier installed to prevent entry of water, snow, dust, or insects into a rough opening gap.

3.2.116 *sealant, n*—any of a variety of compounds used to fill and seal joints or openings in wood, metal, masonry, and other materials.

3.2.116.1 *Discussion*—As contrasted to a sealer, which is a liquid used to seal a porous surface. Some common types of sealants are: acoustical, neoprene, polysulfide rubber, silicone, acrylic latex, butyl rubber, polyurethane.

3.2.117 *setting block, n*—a small piece of neoprene or other suitable material used to position a piece of glass in its sash or frame.

3.2.118 *shim, n*—a thin, flat, or wedge-shaped piece of wood or other suitable material used to level or plumb a fenestration product frame during installation.

3.2.118.1 *Discussion*—Lateral shims are placed in the rough opening adjacent to the frame jambs. Setting shims are placed in the rough opening beneath the sill.

3.2.119 *shingle-lapped (fashion), n*—lapped in a water-shedding fashion (such as roofing shingles).

3.2.120 *shore hardness, n*—measure of firmness of a material determined by means of a durometer hardness gage.

3.2.120.1 *Discussion*—the range of 20 to 25 shore hardness is about the firmness of an art gum eraser; 90 is about the firmness of a rubber shoe heel.

3.2.121 *sill, n*—the horizontal bottom part of a window or door.

3.2.121.1 *Discussion*—According to Terminology E631, a lower horizontal member of a fenestration product frame.

3.2.122 *sill angle, n*—an L-shaped installation accessory that may be employed at the sill of a replacement window to accommodate the slope of the existing sill construction.

3.2.123 *sill horn, n*—the horizontal projection of a wood window sill that forms the base for the brick molding or other exterior casing.

3.2.124 *skylight, n*—sloped or flat application of fenestration products which allows for natural day-lighting and ventilation.

3.2.124.1 *Discussion*—Usually located on a roof where they are out-of-reach.

3.2.125 *spacer, n*—see *shim*.

3.2.126 *square, n*—two construction members that meet at a right (90°) angle.

3.2.126.1 *Discussion*—In fenestration, the condition in which the jambs are perpendicular to the head and sill.

3.2.127 *stool, n*—the flat narrow shelf forming the top member of the interior trim at the bottom of a window.

3.2.128 *stop, n*—the part of a fenestration product that controls or limits the position of the sash or panel.

3.2.128.1 *Discussion*—According to Terminology E631, in glazing, a strip of metal or wood used around the periphery of a pane of glass to secure it in place.

3.2.128.2 *Discussion*—Also defined as the narrow trim along the jamb and head of a hinged window or door which limits the swing of the sash or panel, or creates a channel for a sliding sash or panel.

3.2.129 *stucco, n*—cementitious mixture used for exterior plaster.

3.2.130 *subsill, n*—a separate framing member that, when installed on the underside of a sill, becomes an integral part of the sill.

3.2.131 *terne metal, n*—an alloy of lead and tin applied to steel by dipping steel into molten terne metal.

3.2.131.1 *Discussion*—The alloy has a dull appearance resulting from the high lead content.

3.2.132 *thermal barrier, n*—an element made of material with relatively low thermal conductivity, which is inserted between two members having high thermal conductivity, in order to limit heat transfer.

3.2.133 *thermal bridge, n*—an entity that allows for large amounts of conductive heat flow (relative to the amount that would flow at that location if the entity were not present) between surfaces at different temperatures.

3.2.134 *through-wall flashing, n*—flashing that extends completely underneath the sill or over the head of a window, and has an upturned leg on the interior side.

3.2.135 *tooling, n*—the operation of pressing in and striking off the sealant in a joint.

3.2.135.1 *Discussion*—To press the sealant against the sides of a joint and secure good adhesion; the finishing off of the surface of a sealant in a joint so that it is smooth and flush with the surface.

3.2.136 *trimmer stud, n*—see *jack stud*.

3.2.137 *U-factor, n*—the overall coefficient of heat transfer of a material or system.

3.2.137.1 *Discussion*—In systems composed of non-homogeneous materials, such as fenestration systems, it is the area-weighted sum of the individual material U-factors (that is, $U_{system} = U_1A_1 + U_2A_2 + \ldots)/(A_1 + A_2 + \ldots)$ where 1, 2, and so forth represent the specific components of the system or fenestration product. See also *R-value*.

3.2.138 *unit, n*—refers to complete or total assembly, such as for fenestration products including all frame, sash, glazing, door slabs, hardware or other elements defining the complete fenestration product.

3.2.139 *upstand, n*—the vertical portion of a panning, flashing, or subsill system that prevents the migration of collected water behind the membrane or into the wall cavity.

3.2.140 *vapor retarder (commonly called vapor barrier), n*—material used in a house building envelope to retard the passage of water vapor or moisture.

3.2.141 *wall, n*—one of the sides of a room or building connecting floor and ceiling or foundation and roof.

3.2.142 *water shedding system, n*—a system that prevents or limits to extremely small amounts, liquid water intrusion from the building exterior into parts of the building envelope where water accumulation would cause serviceability or durability problems.

AVA Documents
Document Sharing Hub

Full document details: ASTM E2112-07(2016)

3.2.143 *weather barrier system, n*—a system design which integrates various components to provide a weather-resistive assembly including the fenestration product and the adjacent construction.

3.2.143.1 *Discussion*—In barrier wall systems, the exterior-most surface is the weather barrier. In membrane/drainage systems a membrane, which is the weather-resistive barrier (WRB), is incorporated behind the exterior surface.

3.2.144 *weather-resistive barrier (WRB), n*—the surface or surfaces of a wall system responsible for preventing water infiltration to the building interior.

3.2.145 *weatherability, n*—the capability of a building, assembly, component, product, or construction to resist the deteriorating effects of weather exposure; for example, sun, wind, rain, frost, heat, cold, and high and low humidity.

3.2.146 *window cleaner anchor, n*—an anchor, either single or double headed, conforming to ASME A39.1 Standard, Safety Requirements for Window Cleaning, that will allow a window cleaner to safely access the exterior of a window for cleaning.

3.2.147 *wired glass (fire resistant), n*—flat, clear, transparent or translucent soda lime silicate glass which has a steel mesh welded at all intersections incorporated in the glass during its manufacturing process.

3.2.147.1 *Discussion*—To be considered as fire resistant this product shall be covered by an appropriate listing body and shall be labeled accordingly when installed.

3.2.148 *window/wall assembly, n*—the building envelope and the fenestration products incorporated into it.

3.3 *Abbreviations:*

3.3.1 *AAMA*—American Architectural Manufacturers Association

3.3.2 *ANSI*—American National Standards Institute

3.3.3 *ASME*—American Society of Mechanical Engineers

3.3.4 *ASTM International*—American Society for Testing and Materials

3.3.5 *CPSC*—U.S. Consumer Products Safety Commission

3.3.6 *CSA*—Canadian Standards Association

3.3.7 *EIFS*—Exterior Insulation and Finish System

3.3.8 *GFRC*—Glass Fiber Reinforced Concrete

3.3.9 *HMMA*—Hollow Metal Manufacturers Association

3.3.10 *IBC*—International Building Code

3.3.11 *ICBO*—International Conference of Building Officials

3.3.12 *ISDSI*—Insulated Steel Door Systems Institute

3.3.13 *NAMI*—National Accreditation and Management Institute

3.3.14 *NFRC*—National Fenestration Rating Council

3.3.15 *psf*—pounds per square foot

3.3.16 *UBC*—Uniform Building Code

3.3.17 *USOSHA*—U.S. Occupational Safety and Health Administration

3.3.18 *WDMA*—Window and Door Manufacturers Association

4. Significance and Use

4.1 This practice recognizes that the effective performance of installed fenestration products is dependent in part upon following proper installation procedures and appropriate workmanship.

4.2 This practice recognizes that the coordination of trades and proper sequencing are essential for effective fenestration installation. The general contractor shall be responsible for the necessary coordination of trades and proper construction sequencing of the installed fenestration product.

4.3 Improper installation of units contributes to excessive air, water and sound leakage, and condensation. It may promote the deterioration of wall constructions, insulation, fenestration products, and their respective finishes.

4.4 This practice presumes a working knowledge of applicable federal, state, and local codes and regulations; specifically, but not limited to required means of egress, requirements for safety glazing materials, and structural requirements of applicable codes.

4.5 This practice presumes a working knowledge of the tools, equipment, and methods necessary for the installation of specified fenestration products. It further assumes familiarity with flashing and sealing, glazing procedures, finishes where applicable, and an understanding of the fundamentals of construction that affect the installation of these units.

4.6 This practice presumes that the products that have been furnished for the installation and their locations within the structure comply with all the applicable building codes and regulations.

5. Related Issues and Procedures

5.1 *Continuity*—Continuity shall be maintained between elements in the fenestration product and the weather resistant barrier that provides weather protection, air leakage control, and resistance to heat flow and vapor diffusion. To ensure continuity with the weather resistant barrier, the installer shall identify the elements in the weather barrier system and the fenestration product that provide each of these functions. Where the installer is required to furnish or repair a vapor barrier, the material shall comply with the requirements of Practice C755.

5.2 *Joints and Anchorages*—Joints and anchorages between the building envelope (weather barrier assembly) and fenestration product shall be designed to accommodate differential thermal expansion (see Table 1) and moisture migration within the window/wall assembly.

5.3 *Moisture Entrapment*—At no time shall an exterior seal be installed in a manner that will trap moisture in the perimeter cavity between the fenestration product and the wall.

5.4 *Weather Resistant Barrier*—A weather resistant barrier shall be created to preclude entry of water into the fenestration product perimeter area, or promptly drain water that enters the fenestration product perimeter area, or both.

AVA Documents
Document Sharing Hub

Full document details: ASTM E2112-07(2016)

TABLE 1 Guidance for Determining Thermal Expansion Requirements

NOTE 1—Example: If you have a 12-ft (3.657 m) wide aluminum window there would be 0.000013 in./in./°F (0.000023.4 m/m/C°) coefficient of expansion. To obtain the total movement for a 100°F (55.5°C) temperature change, multiply as follows:
Table factor × 100°F × 12 in./ft. × 12 ft = movement 0.000013 × 100 × 12 × 12 = 0.19 in.
(Table Factor × 55.5°C × 3.657 m = movement 0.000023 × 55.5 × 3.675 = 4.7 mm)

Material	Coefficient of Expansion	
	Fahrenheit	Celsius
Aluminum	13.0×10^{-6} (in./in./°F)	23.4×10^{-6} (mm/mm/°C)
Carbon steel	6.5×10^{-6} (in./in./°F)	11.7×10^{-6} (mm/mm/°C)
Fiberglass pultrusion-longitudinal	6.0×10^{-6} (in./in./°F)	10.8×10^{-6} (mm/mm/°C)
Glass	5.0×10^{-6} (in./in./°F)	9.0×10^{-6} (mm/mm/°C)
Rigid PVC	22.0 to 44.0×10^{-6} (in./in./°F)	39.6 to 79.2×10^{-6} (mm/mm/°C)
Wood–longitudinal	1.7 to 3.0×10^{-6} (in./in./°F)	3.06 to 5.4×10^{-6} (mm/mm/°C)

5.5 *Weatherability*—The capability of a building, assembly, component, product, or construction to resist the deteriorating effects of weather exposure, for example, sun, wind, rain, frost, heat, cold, high and low humidity.

5.6 *Construction Sequence*—Effective integration and continuity of the fenestration product and other components of the building envelope is dependent on proper construction sequencing.

5.7 *Construction Damage*—The installed weather resistant barrier shall be protected from damage during construction. Any damage to the weather resistant barrier shall be repaired prior to completing the installation of the fenestration product.

5.8 *Inspection*—Prior to installation, the installer shall inspect for racked corners, gaps, plugged weep holes, and fractured seals. The installer is responsible for inspecting before and after installation of the fenestration product, and re-sealing corners where necessary. Reseal or replace as directed by manufacturer.

5.9 *Rough Opening:*

5.9.1 *Rough Opening Size:*

5.9.1.1 The rough opening shall be larger in both width and height than the actual net dimension of the product to be installed. The installer shall obtain all available plan details and construction documents, as well as the manufacturer's rough opening requirements and instructions.

5.9.1.2 The installer shall notify his client if any conditions exist that would prevent the proper installation of the fenestration product, or prevent application of materials and components in accordance with this practice.

5.9.2 *Insulating or Filling the Rough Opening Gap:*

5.9.2.1 Rough opening gaps shall be insulated following the fenestration product installation to reduce air leakage and energy loss. The material used to fill the rough opening gap shall be selected to enhance the energy-saving performance of the fenestration product installation.

5.9.2.1.1 Glass or mineral fiber insulation, one-component polyurethane foam sealants, or other code approved material shall be used to fill the rough opening gap as required by applicable codes or the contract documents or the fenestration product manufacturer.

NOTE 4—Excessive insulating material may distort the fenestration frame, requiring the removal and re-injection of the proper amount of insulation. Too little material will leave voids in the rough opening gap and permit excess air infiltration. See Annex A1 for the recommended procedure for using one-component polyurethane foam sealants.

5.9.2.2 *Thermal Barriers*—Where thermally broken metal fenestration systems are used, exercise care to seal and insulate the interior metal framing from the location of the thermal barrier to the rear with insulation, protecting the interior side from the presence of exterior ambient temperatures. See Fig. 1.

5.9.2.3 Adequate clearance shall be allowed for thermal expansion of the fenestration product. Joint size will vary based on the allowance for lineal thermal expansion. Tables 1 and 2 provide guidance for determining the thermal expansion requirements of various materials.

NOTE 5—These tables are for readily available fenestration materials. Where other materials or composite materials are used, the fenestration manufacturer should be consulted for the coefficient of expansion and tolerances required. Adequate perimeter clearance must be allowed so that perimeter sealants are not damaged. A good rule of thumb is that the joint should be at least twice the expected movement dimension. See 5.18.1 for further information.

5.10 *Materials Protection*—Proper protection of the window or door during application of the building finish is important to ensure its intended function, aesthetics, and durability. It can expedite or eliminate any necessary cleanup, and it can prevent unnecessary damage. When it is likely that

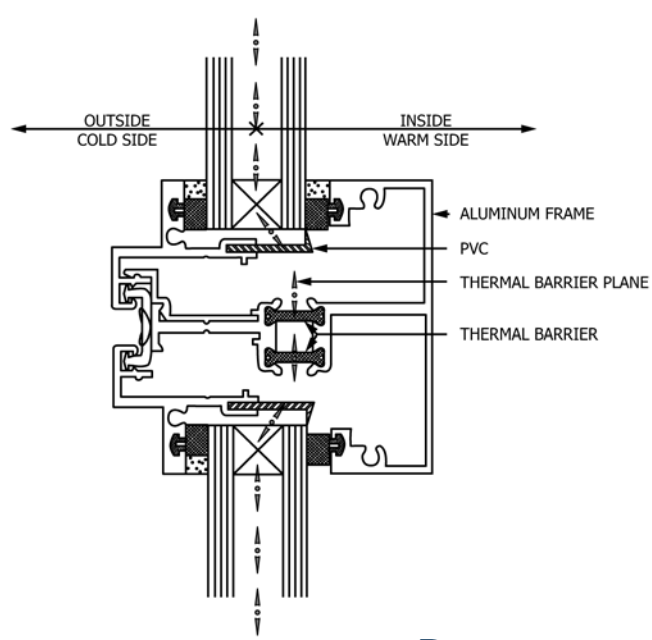

FIG. 1 Thermal Barrier

AVA Documents
Document Sharing Hub

Full document details: ASTM E2112-07(2016)

TABLE 2 Rates of Thermal Movement for Common Materials

NOTE 1—This table is provided through the courtesy of AAMA.

NOTE 2—Based on a 100°F (55.5°C) temperature change using an 8 ft (2.438 m) section of material.

Material	Range of Movement	
	(IP)	(SI)
Rigid PVC	0.22 to 0.44 in. (7/32 to 7/16 in.)	5.6 to 11.1 mm
Aluminum	0.130 in. (1/8 in.)	3.2 mm
Steel	0.065 in. (1/16 in.)	1.6 mm
Wood	0.017 to 0.025 in. (1/64 to 1/32 in.)	0.4 to 0.8 mm
Glass reinforced polyester	0.100 to 0.140 in. (3/32 to 5/32 in.)	2.4 to 4.0 mm

the fenestration units will be subjected to paint over-spray or harsh cleaning chemicals (as in masonry applications that are cleaned with brickwash), it is considered good practice to fully mask the unit, for example, with plastic film or paper, prior to the application of any potentially damaging exterior finish.

5.10.1 Use caution to avoid damage to fenestration products before and after installation. Many field-applied protective coatings can damage fenestration gaskets and sealants, especially insulating glass sealants, and are not recommended. Contact fenestration manufacturer before applying any such coatings. Brick wash (muriatic acid), which is commonly used to clean masonry, can etch glass and corrode hardware. Exterior surfaces of windows and doors should be poly-wrapped during masonry acid cleaning. Masking tapes may, when heated by sunlight, bake onto window surfaces, causing damage when they are removed. Masking tape shall not be allowed to remain on the product for an extended period of time as exposure to sunlight may make adhesive residue difficult to remove. Stucco left to cure on frames and glass may scratch these surfaces when being removed. Glass and aluminum surfaces and hardware exposed to leaching water from new concrete or stucco shall be rinsed immediately with clear water to prevent permanent staining. See 11.4.

NOTE 6—Cleaning from the highest part of the building down is most appropriate so that water run-off does not affect areas previously cleaned. For each opening, the cleaning process should start at the top and work toward the bottom, followed by a thorough rinsing with clean water.

5.11 *Cleaning and Maintenance*—Cleaning of fenestration products shall be in strict accordance with the fenestration products manufacturer's installation instructions. Solvents shall be used in strict accordance with solvent manufacturer's instructions and applicable codes, safety regulations, and environmental regulations. (**Warning—**MEK (Methyl ethyl ketone) and similar solvents may damage organic sealants, gaskets, and finishes used on fenestration products. They shall be used with great care and should not be allowed to come in contact with organic materials. Their use shall be avoided on anodic finishes protected by clear organic coatings. Organic solvents should be used only in accordance with manufacturers' safety recommendations. Do not use solvents on painted aluminum, PVC, fiberglass, or other materials unless specifically recommended by the manufacturer.) (**Warning—**If lubricants are required, the installer shall ensure that the lubricant is compatible with the fenestration components.)

5.11.1 All parts of a fenestration product shall be cleaned as soon as the installation is complete. Exposed interior metal surfaces shall be washed down using a solution of mild domestic detergent in warm water, applied with a soft clean wiping cloth. Exposed exterior non-metal surfaces shall be cleaned as recommended by the manufacturer of the material.

5.11.2 Glass surfaces shall be cleaned soon after installation and regularly if surrounding construction leaves deposits on glass. Paint, plaster, and sealant spills or splashes shall be removed from the glass immediately. Glass shall not be cleaned with abrasive material or cleaners. Commercial glass cleaning products or household dish washing detergents in water solutions will not normally harm glass or glazing sealants and may be used. Before using more aggressive cleaning chemicals or rubbing compounds, their compatibility and application techniques shall be verified with the typical fenestration product manufacturer and sealant supplier. Glass and aluminum surfaces exposed to leaching water from new concrete or stucco shall be rinsed immediately to prevent permanent damage.

5.11.3 If lubrication is required, hardware and tracks shall be lubricated according to the manufacturer's instructions after installation is complete. Tracks of wood windows shall be lubricated only after finishing because lubricant over-spray adversely affects the bond between the wood and the finish. When lubricating metal and vinyl track, silicone aerosol spray shall be prevented from contacting plastic locking mechanisms as these may be made of impact-resistant polycarbonate, which will begin to dissolve when coming into contact with the solvents contained in these sprays.

5.11.4 Correctly identify the material and finish to be cleaned when selecting an appropriate cleaning method. Check specifications or *as built* drawings, or both, if in doubt as to the finish. If this information is not available, contact the product manufacturer to determine the finish of the product.

5.11.5 Never use aggressive alkaline or acid cleaners on finishes, glass, or sealants. Do not use cleaners containing trisodium phosphate, phosphoric acid, hydrochloric acid, hydrofluoric acid, or similar compounds on anodized aluminum finishes. Always follow the cleaner manufacturer's recommendations as to the proper cleaner and concentration.

NOTE 7—Always test-clean a small area first. Different cleaners should not be mixed.

5.11.6 It is preferable to clean the fenestration product when shaded. Do not attempt to clean hot, sun-heated surfaces since possible chemical reactions on hot surfaces will be highly accelerated and non-uniform. Also, avoid cleaning in freezing temperatures or when temperatures are sufficiently cold to cause condensation. Surfaces cleaned under these adverse

AVA Documents
Document Sharing Hub

Full document details: ASTM E2112-07(2016)

conditions can become so streaked or tainted that they cannot be restored to their original appearance.

5.11.7 Apply the cleaning solution only to an area that can be conveniently cleaned without changing position. Thoroughly rinse the surface with clean water before applying cleaner. Minimize cleaner rundown over the lower portions of the building and rinse such areas as soon as practical.

5.11.8 Cleaners containing strong organic solvents will have a deleterious effect on organic overlay coatings, but not on anodized aluminum itself. The possibility of solvents extracting stain-producing chemicals from sealants and affecting the function of the sealants, however, shall be considered. Test a small area first.

5.11.9 Strong cleaners should not be used on glazing materials and other building accessories where it is possible for the cleaner to come in contact with the finish of the fenestration product. Solutions of water and mild detergents should be used. If an aggressive cleaner is required for some other component of the building, use care to prevent the cleaner from contacting the fenestration product's finish.

5.11.10 Do not use excessive abrasive rubbing to remove stubborn stains. Such procedures can produce an undesirable appearance or adversely affect the finish.

5.11.11 *Removal of Light Surface Soil From Aluminum Products:*

5.11.11.1 Removal of light surface soil may be accomplished by alternative methods as described in the following four paragraphs. Only trial and error employing progressively stronger cleaning procedures can determine which will be most effective.

5.11.11.2 The simplest procedure is to flush the surface with water using moderate pressure to dislodge the soil.

5.11.11.3 If the soil is still present after air drying the surface, clean the surface with a soft brush or sponge and water (concurrently spraying the surface with water and sponging).

5.11.11.4 If soil still adheres, a mild detergent cleaner should be used with brushing or sponging. The washing should be accomplished with uniform pressure, cleaning first with a horizontal motion and then with a vertical motion. The surfaces shall be thoroughly rinsed by spraying with clean water and thoroughly dried from top to bottom.

5.11.11.5 For anodized aluminum surfaces only, a cleanup with methyl ethyl ketone (MEK) or similar solvent using a clean cloth to wipe the surface is recommended if it is necessary to remove oils, wax, polish, and other materials. Always test-clean a small area first to determine the effect on the finish.

5.11.12 *Removal of Heavy Surface Soil From Aluminum Products:*

5.11.12.1 If surface soil still adheres on painted materials, a mild solvent such as mineral spirits may be used to remove grease, sealant, or caulking compounds. Stronger solvents or solvent containing cleaners may have a deleterious or softening effect on paints and should not be used. Consult with the coating manufacturer on recommendations pertaining to the use of solvents on their finishes.

5.11.12.2 Always spot-test the use of solvents on painted surfaces in inconspicuous locations. Exercise care to ensure that no marring of the surface is taking place when using solvents. Solvents shall be applied with a clean cloth and removed with a second clean cloth. Any remaining residue should be washed with mild soap and rinsed with water. Always use solvents sparingly.

5.11.12.3 If surface soil still adheres on anodized aluminum surfaces after using procedures for removal of light surface soil, cleaning with the assistance of a non-abrasive nylon cleaning pad can be employed. (**Warning—**The following procedures shall not be used on surfaces that are painted or have a factory applied clear protective coating (lacquer) unless the clear coating has deteriorated and the owner has specifically requested that it be removed.)

5.11.12.4 Hand-scrub the surface using a nylon non-abrasive cleaning pad. Thoroughly wet with clean water and a mild detergent cleaner. Start at the top and work down, rubbing the surface with uniform pressure in the direction of the grain.

5.11.12.5 Scrubbing with a non-abrasive nylon cleaning pad wet with surface protectant material is also suggested for removing stubborn soils and stains.

5.11.12.6 After scrubbing, the surface should be rinsed thoroughly with clean water or wiped with solvent to remove all residues. It may be necessary to sponge the surface while rinsing, particularly if the cleaner is permitted to dry on the surface.

5.11.12.7 The rinsed surface is either permitted to air dry or is wiped dry with a chamois, squeegee, or lint-free cloth.

5.11.13 *Cleaning of Vinyl Products:*

5.11.13.1 For more difficult stains and dirt, use readily available household cleaners. Before using mildly abrasive cleaners, test on an inconspicuous location, as the mild abrasive component may have a negative effect on the glass and vinyl surfaces.

5.11.13.2 Cleaners with aggressive organic solvents, such as chlorine bleach, liquid grease remover, strong detergents and furniture cleaners should be avoided, due to the high probability of softening or surface damage on vinyl and glazing sealants.

5.11.13.3 For vinyl substrates laminated with wood veneer, PVC films, or pigmented coatings, consult the application, product, or manufacturer's recommendations for general clean-up, protection, and contact with incompatible materials.

5.11.14 *Cleaning of Fiberglas, Pultrusion, Composites:*

5.11.14.1 To clean black marks or residual adhesive from sash and frame surfaces after installation, use a non-abrasive liquid cleaner carefully applied with a clean plastic fiber rubbing pad. To avoid damage to the surface, do not use this cleaning method repeatedly. Use of harsh abrasive cleaning agents can result in surface dullness and discoloration.

5.11.14.2 For ongoing maintenance, wipe with a damp sponge or soft cloth and non-abrasive multi-purpose liquid or spray cleaner. Follow manufacturer's instructions for proper use of the cleaning agent. (**Warning—**Damage can also occur as a result of the cleaning process; for example, sand particles in stucco overspray on the glass can cause scratches in the glass while the overspray is being removed, if precautions are not taken.)

5.12 *Dissimilar Materials:*

Documents
Document Sharing Hub

Full document details: ASTM E2112-07(2016)

5.12.1 Direct contact of aluminum surfaces with all incompatible materials shall be avoided. Aluminum shall be protected from incompatible materials by placing between the surfaces substances such as bituminous coatings of paint, caulking, non-absorptive plastic, elastomeric tapes, or gaskets.

5.12.2 Wood or other absorptive materials which may become repeatedly wet and which are in contact with aluminum should be painted with two coats of waterproof exterior paint and the joints sealed with a properly selected caulking compound.

5.12.3 Compatibility of caulks, sealants, and adhesives should be checked. As with any dissimilar materials, the applicator should consult both the manufacturer of the fenestration product as well as of the caulk, sealant, adhesive manufacturer. For cleaning procedures see 5.11.

NOTE 8—See Annex A4 for additional information.

NOTE 9—Further information concerning the protection of aluminum from dissimilar materials can be found in the Uniform Building Code, Section 28.1. Dissimilar metals (except 300 series stainless steel, zinc, or a small area of white bronze) should be painted if used in locations where drainage from these metals passes over aluminum. Aluminum surfaces in contact with mortar, concrete, other masonry materials or pressure-treated wood framing shall be isolated with alkali resistant coatings, a vinyl liner, or other available method.

5.12.3.1 *Incompatibility of Caulks, Sealants and Gaskets:* 5.12.3.1.1 Refer to 11.4 and Annex A4. Self-adhesive type flashing products may not require the use of additional sealant during application to the substrate or the fenestration product as long as the flashing securely adheres to the materials. The surface that this flashing is applied to must be clean, dry, and frost-free. Where sealant is used near these materials (for example, at exterior facade installation joints), do not use sealant that contains solvent. Sealant that contains solvent can have an affect on the bond and performance of self-adhesive type flashing materials. Consult the supplier of these materials to determine what type of sealant or primer, or both, can be used with these products. Always consult the flashing supplier to determine compatibility with the various installation materials, and to obtain specific installation techniques.

5.12.4 *Steel and Other Metals*—Steel components such as framing, anchors, and other types of unexposed metal clips should be isolated from the fenestration product according to the manufacturer's recommendation.

5.12.5 *Stucco, Concrete and Mortar*—Stucco, concrete and mortar left to cure on frames, sash, and glass will damage these surfaces. Remove and clean all such materials from surfaces prior to curing. In addition, glass and frame surfaces exposed to leaching water from new concrete, stucco, or mortar shall be rinsed immediately with clear water to prevent damage.

5.12.6 *Wood and Wood Components*—Unless wood is moderately or appreciably decay-resistant, its surfaces should not be placed in direct contact with concrete, masonry units, mortar, or stucco, as these materials may hold substantial quantities of water for extended periods. Common *white woods* (such as pine spruce, hemlock, or fir) have relatively low decay resistance and should be protected from direct contact with these materials by paint coatings, caulking materials, non-absorptive plastic or elastomeric tapes, or gaskets between the surfaces. For woods of moderate decay resistance, treatment with water repellant preservatives may afford sufficient protection so as to allow direct contact.

NOTE 10—Heartwood of redwood, cedars, cypress, or wood pressure-treated with preservatives may be considered appreciably decay resistant. Heartwood of Douglas fir is moderately decay resistant. See the Wood Handbook (USDA, Forest Service) for decay resistance of other species.

5.13 *Flashing Requirements:*

5.13.1 Proper flashing and sealing are necessary to prevent water from entering between the weather resistant barrier, the fenestration product frame, and the adjacent construction materials.

5.13.2 In no case shall a paper-based material be used as a waterproof membrane on surfaces or roofs having a slope of less than 60° from the horizontal. (See Fig. 2.) (**Warning—**The use of a paper-based material in an application where water can pool or collect on its surface may result in the degradation of this material and the penetration of water through the building weather resistant barrier.)

5.13.3 *Minimum Requirements for Flashing Material:*

5.13.3.1 Unless otherwise specified, flashing material shall provide twenty-four (24) hour minimum protection from water penetration when tested in accordance with Test Method D779 (see Appendix X1).

5.13.3.2 The flashing membrane shall be securely affixed to minimize any weather damage prior to the building's exterior treatment being applied. The fenestration product and flashing shall be integrated into the overall weather resistant barrier. The fenestration and flashing manufacturers shall be consulted for any special flashing requirements unique to their products.

NOTE 11—Numerous references to properly and securely attaching flashing materials are mentioned in the following sections. The building contractor is responsible for coordination of this work, as it is greatly dependent on the construction schedule. Once installed, local wind and weather conditions, as well as exposure to other trades, can have a detrimental effect on the permanent attachment of flashing.

5.13.3.3 Unless otherwise specified, when aluminum or copper sheet, or both, or step flashing is specified, it shall be no less than 0.040 in. in thickness. It can be mill finished if totally concealed but if exposed, shall be anodized or coated with an appropriate paint. In all cases the aluminum sheet shall be separated from dissimilar metals or masonry, or both, by tape, gasket, elastomeric sheet, a heavy coat of bituminous paint, or other approved separation materials.

5.13.3.4 When aluminum sheet or step flashing is specified for installation of skylights, it shall be installed in accordance with acceptable roofing practices or according to the manufacturer's installation instructions.

5.13.3.5 Unless otherwise specified, when aluminum, copper, or galvanized metal is specified for head flashing, it shall be no less than 26 gage in thickness. Galvanized metal shall be zinc coated on both sides and the coatings can be hot dipped galvanized or electroplated in conformance with Specification A123/A123M. It can be surface treated for painting by phosphatizing.

5.13.3.6 When terne metal is used, it shall consist of copper bearing steel, coated both sides with lead-tin alloy. Coating weights are typically 0.047 lb/ft^2 (0.23 kg/m^2) (see Appendix X1).

5.14 *Fastening Systems/Anchorage:*

AVA Documents
Document Sharing Hub

Full document details: ASTM E2112-07(2016)

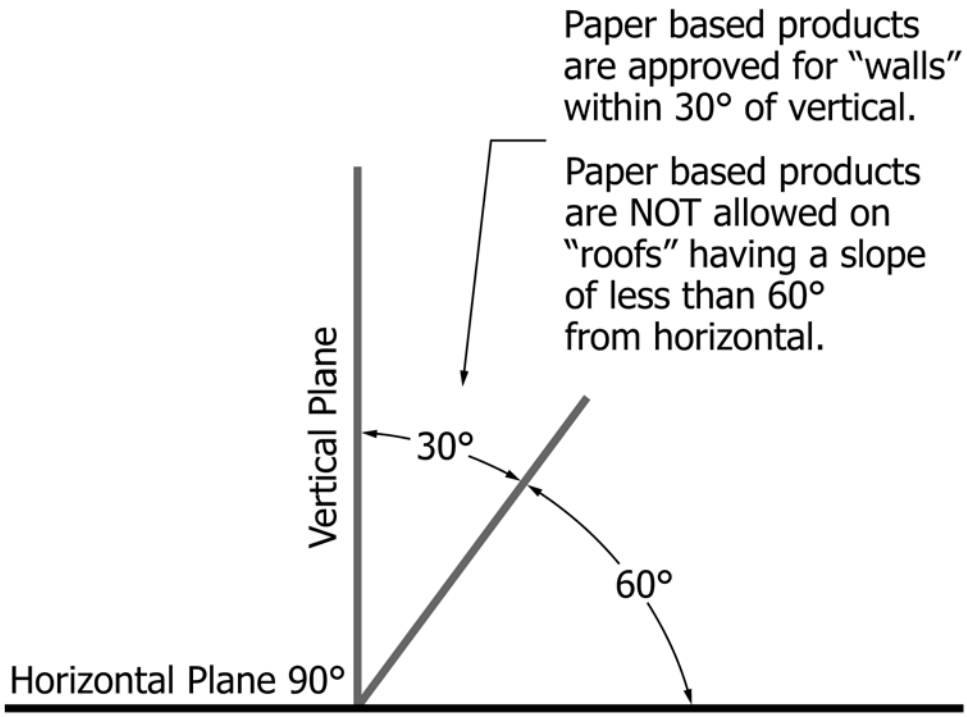

NOTE 1—The use of a paper-based material in an application where water can pool or collect on its surface may result in the degradation of this material and the penetration of water through the building weather resistant barrier.

FIG. 2 Flashing on Sloped Surfaces

5.14.1 Important: When specifying or considering the structural load requirements for windows and doors, it is important to consider the method of fastening the unit(s) into the opening. Consult with the window/door manufacturer's fastening specifications to ensure units are installed properly to meet or exceed performance ratings. Selection of the appropriate fastening method is the responsibility of the installer, contractor, structural engineer, architect, building owner, or consumer, or combination thereof.

5.14.2 Fasteners shall be installed to secure the unit under service conditions (weight, wind load, temperature variations, and so forth). It is not recommended that horizontal surfaces of flashings be penetrated with fasteners. Fasteners passing through the interior sill shall be sealed by putting sealant in the hole before the screw, then tightly installing the screw, then sealing the top surface of the fastening head. Refer to manufacturer's instructions or construction documents in all cases. See 5.13 for further information.

5.14.3 To provide adequate protection against galvanic corrosion, use only fasteners that are compatible with the materials joined and that will not result in galvanic corrosion. Refer to 5.12.

5.14.4 Plated or coated steel fasteners or non-magnetic stainless steel fasteners shall meet the minimum requirements as indicated in Table 3.

5.14.5 Fastener length shall be sufficient to penetrate the substrate to a depth designed to meet applicable building codes, manufacturer's recommendations, and structural calculations. Number and spacing shall be sufficient to meet loads. See 8.4.2 for anchoring of vinyl frames.

5.14.6 Fasteners shall not be installed through exterior sill tracks unless recommended by the fenestration manufacturer, as this could cause water penetration into the walls below. Fasteners passing through the interior sill shall be sealed by putting sealant in the hole before screw, then tightly installing the screw, then sealing the top surface of the fastener head.

TABLE 3 Fastener Selection

Fastener Material	Fastener Exposure	Performance Requirement
Steel—cadmium plated	not visible after installation	Specification B766 (8 µm thick)
	visible after installation	not recommended
Steel—zinc plated	not visible after installation	Specification B663 (8 µm thick)
	visible after installation	not recommended
Steel—nickel/chrome plated	not visible after installation	Specification B456, Type SC 2
	visible after installation	not recommended
Magnetic stainless steel	not visible after installation	recommended
400 Series min. 16 % chrome	visible after installation	not recommended
Non-magnetic stainless steel	not visible after installation	recommended
300 Series	visible after installation	recommended

Documents
Document Sharing Hub

Full document details: ASTM E2112-07(2016)

5.14.7 The installation of fasteners or fastening systems shall not cause excessive distortion (±1/16 in. (1.6 mm)) of any frame or sash member, nor in any way impede the operation of the unit. However, when fastening windows to the building structure through an integral nailing flange, the frequency of said fasteners shall be as required to prevent excessive buckling (±1/16 in. (1.6 mm)) of the flange and ensure continuous and positive compression on perimeter caulking between flange and structure (see 8.4.2). The integral nailing flange at the head of the window shall be fastened in such a manner as to insure that the window head will not bow downwards if the head beam over the window deflects. This can be accomplished by vertically elongated installation holes in the integral nailing flange at the window head or special flange clips that allow movement of the flange in a vertical direction. When units are nailed through the exterior wood casing during installation, set nails below the surface and fill nail holes with wood putty. Fill or finish any exterior holes such as staple or nail holes on exterior glazing beads or stops.

NOTE 12—When using an elongated hole or L-shaped slot, do not drive the fastener tight in order to allow freedom of vertical or horizontal movement.

NOTE 13—When interior trim is used, make sure the trim is attached to either the fenestration product or the framing, but not both; allowing for bowing of the header.

5.14.8 Anchoring of window or door products should always be done according to the manufacturer's instructions, the construction documents, or according to the recommendations of a qualified structural engineer. The following references may be used when determining the proper number, type, and size of fasteners to be used for anchoring window and door products. (**Warning—**Fasteners shall never encroach on the designed clearance for glass in the frame.)

(1) "Aluminum Design Manual, Section III"—The Aluminum Association.

(2) TIR A9–1991, "Metal Curtain Wall Fasteners"—The American Architectural Manufacturers Association.

(3) "Standard Handbook of Fastening and Joining"—Robert O. Parmley, P.E., McGraw Hill Book Company, 1977.

(4) "Fastener Standards" and "Manufacturer's Capability Guide," latest editions—Industrial Fasteners Institute.

(5) "Standard Handbook for Mechanical Engineers"—Baumeister and Marks, McGraw Hill Book company, latest edition.

5.14.9 Anchorage of multiple units or assemblies containing multiple units may involve additional fastening requirements from those specified for single units. See manufacturer's instructions for further explanation.

5.15 *Shimming:*

5.15.1 When required, shims shall be installed in a manner and in sufficient number to minimize deflection, distortion, or rotation of the frame to achieve proper operation of the fenestration products, or as recommended by fenestration manufacturer. (**Warning—**When perimeter sealants are used, take proper care that the shims are recessed into the perimeter sealant cavity so that they will not impede on the sealant joint. Make sure that a bond-breaker exists between the edge of the shims and the sealant. See 5.18 for more information. See Fig. 3.)

NOTE 14—Proper shimming is extremely important. Under-shimming can cause the unit to sag out of square. Over-shimming can result in bowed jambs, head jamb, sill, or combination thereof. Both conditions can contribute to improper operation of the sash. See Figs. 3 and 4.

5.15.2 Sill shims used with framing materials shall be made from materials capable of sustaining all loads placed on them by the fenestration products including a minimum compressive strength of 1100 psi (7600 kPa). High-impact plastic or metal shims are recommended for sill support. Wood shims under the sill are not permitted unless specifically recommended by the fenestration manufacturer.

NOTE 15—The compressive strength of wood shims may not be sufficient to support the weight of the product.

5.15.3 The sill shall be supported in a straight and level condition at a minimum of three points. Shims shall be located 3 in. (75 mm) from each end and at midspan, or at 3 in. (75 mm) from each end plus one point per 12 in. (300 mm) of

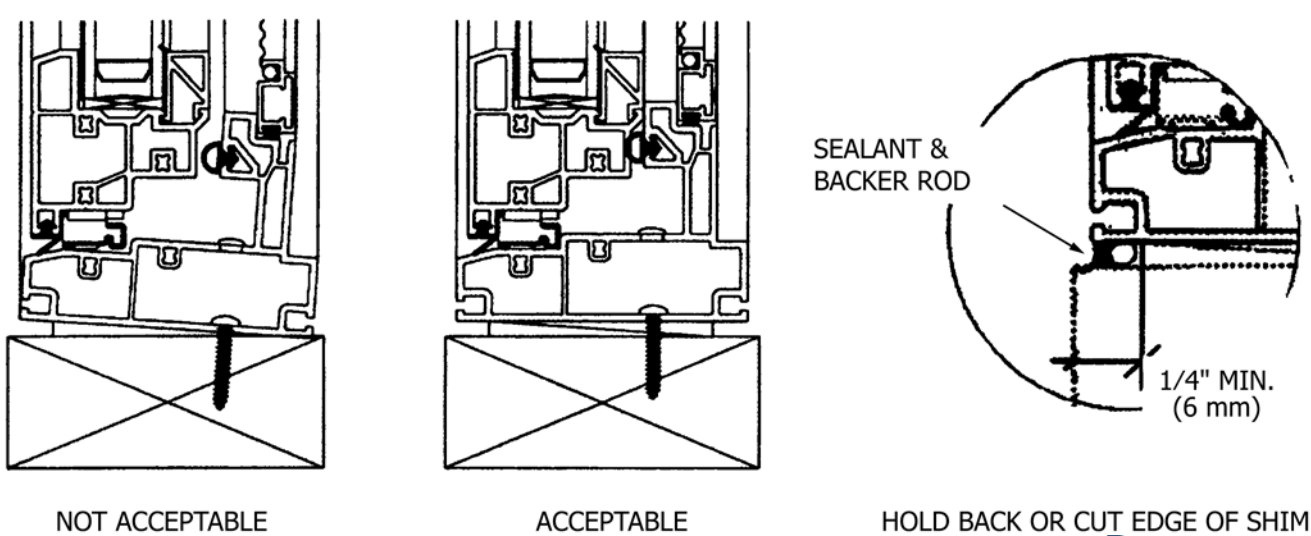

FIG. 3 Shimming Recommendations

AVA Documents
Document Sharing Hub

Full document details: ASTM E2112-07(2016)

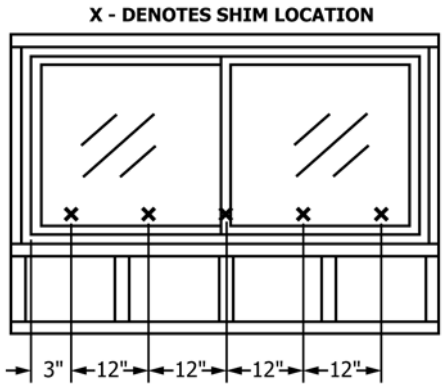

FIG. 4 Shim Locations

nominal width (see Fig. 4). Shim spacing shall never exceed 12 in. (300 mm). In the absence of manufacturer's instructions, shims shall never be closer than 3 in. (75 mm) from any corner of a fenestration assembly. The sill can be supported through the use of shims, support blocking, rough opening sill, or components of the pre-existing window. Refer to the manufacturer's instructions for recommended sill support system details.

5.15.4 Do not over-shim. Check head/side jambs to be sure they are straight ±1/16 in. (1.588 mm). Products shall not be racked more than 1/8 in. (3.175 mm) out of square for dimensions up to 4 ft (1.3 m) or more than 3/16 in. (4.763 mm) for dimensions greater than 4 ft. (1.3 m).

5.15.5 Refer to the manufacturer's instructions for unit shimming requirements. In the absence of manufacturer's instructions for shimming, the tolerances to the product dimensions after installation are given in Table 4 as a guide only.

5.16 *Pan Flashing Systems and Subsills for Weatherability*—Where pan/sill flashings are provided, these flashings shall drain water to the drainage plane or to the exterior (see Annex A3, Figs. A3.1-A3.4). The interior side and the ends of the pan flashing shall be upturned to prevent water from flowing off the flashing into the wall or onto interior finishes. The height of the pan shall be appropriate for the fenestration product being installed, according to manufacturer's instructions or the advice of a design professional. To determine the minimum height requirements for interior height of pan flashing, refer to Annex A3. See Note 2.

5.16.1 A sloped pan, sill, and subsill is the preferred method to divert water to the drainage plane. (See Fig. 5)

5.16.2 The pan flashing system and subsill ends shall prevent water from entering the walls at the lower corners of windows/doors. End dams shall be incorporated at both ends of the pan flashing system and subsills to restrict water entry. See Fig. 5, Figs. 6-11, and Annex A3, Figs. A3.2-A3.4.

5.16.3 *Use of Pan Flashings*—This practice recommends that pan flashings be used under all windows and doors, except where wall construction details incorporating fenestration drainage systems are provided by the building designer, or where wall construction details are specifically provided by fenestration manufacturers' installation instructions. Where used, pan flashings shall be integrated with the wall's weather resistive barrier in shingle-lap fashion (see Fig. 5). The pan flashing shall be continuously sealed to the weather-resistive barrier.

NOTE 16—Pan flashings may not be applicable for certain installations, for example, surface barrier systems, window receptors, pre-existing subsills.

5.16.3.1 Do not alter the fenestration product without specific approval of the fenestration manufacturer.

5.16.4 *Types of Pan Flashings Materials*—Pan flashings materials can be categorized as either rigid sheets or flexible membranes, or combination systems. Within each of these two categories the fabrication of the materials can be classified as either 1-piece or multiple pieces. For purposes of this standard the material and fabrication types of pan flashings are shown in Table 5. See Annex A3, Figs. A3.2-A3.4.

5.16.4.1 *Rigid Sheet, 1-Piece or Multiple-Piece Pan Flashing (Type I)*—These are typically fabricated from sheet metals, semi-rigid plastics or composites. Joints are continuously

TABLE 4 Unit Shimming Tolerance (± in.) from Nominal

NOTE 1—Products shall not be racked more than 1/8 in. (3 mm) out of square for dimensions up to 4 ft (1.3 m) or more than 3/16 in. (1.6 mm) for dimensions greater than 4 ft (1.3 m).

	in./ft	in. Over 4 ft	in., max	Method of Measure
Level (horizontal measure)	1/32 in. (0.8 mm)	1/8 in. (3 mm)	1/8 in. (3 mm)	level and steel rule or tape
Plumb (vertical measure)	1/32 in. (0.8 mm)	1/8 in. (3 mm)	1/8 in. (3 mm)	level or plumb-line and steel rule or tape
True/Rack	1/32 in. (0.8 mm)	1/8 in. (3mm)	3/16 in. (1.6 mm)	using two strings across corners
Straight (measure of straightness)	1/64 in. (0.4 mm)	1/16 in. (1.6 mm)	1/16 in. (1.6 mm)	level or plumb-line and steel rule or tape
Squareness (diagonal measure)	n/a	n/a	[A]	steel rule or tape

[A] 1/8 in. up to 20 ft^2 (3 mm up to 1.8 m^2)
1/4 in. over 20 ft^2 (6 mm over 1.8 m^2)

AVA Documents
Document Sharing Hub

Full document details: ASTM E2112-07(2016)

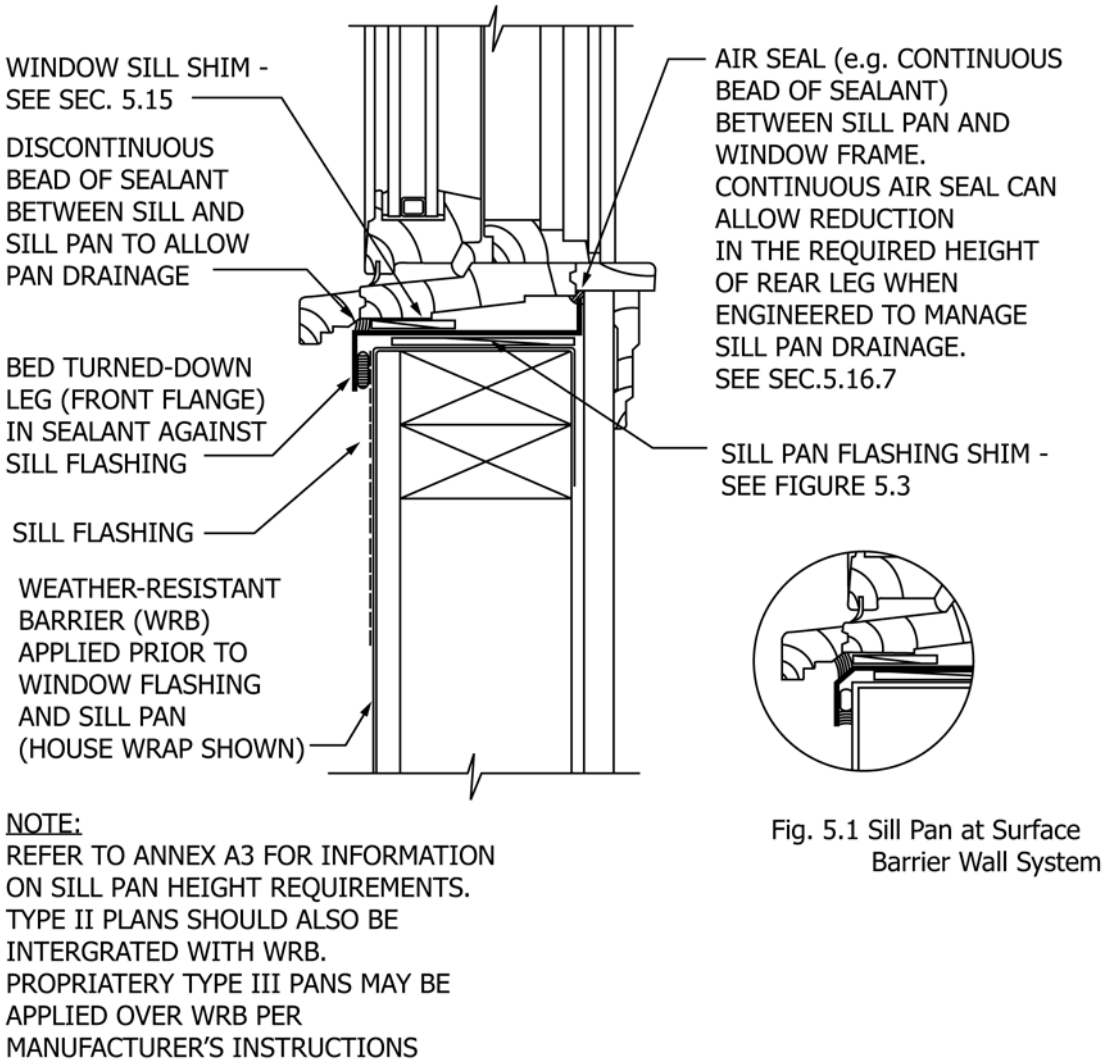

NOTE:
REFER TO ANNEX A3 FOR INFORMATION ON SILL PAN HEIGHT REQUIREMENTS.
TYPE II PLANS SHOULD ALSO BE INTERGRATED WITH WRB.
PROPRIATERY TYPE III PANS MAY BE APPLIED OVER WRB PER MANUFACTURER'S INSTRUCTIONS

Fig. 5.1 Sill Pan at Surface Barrier Wall System

NOTE 1—Type II pans should also be integrated with WRB. Proprietary Type III pans may be applied over WRB per manufacturer's instructions.

FIG. 5 Membrane/Drainage System-Installation of Sill Pan

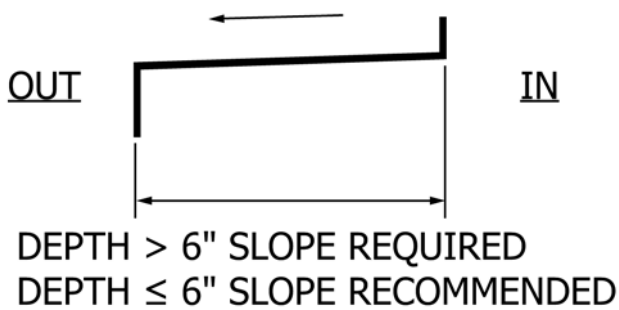

FIG. 5 .2 Flat and Sloping Sill Pan *(continued)*

soldered, sweated, chemically or thermally welded as appropriate to achieve permanent watertightness. See Fig. 6.

5.16.4.2 *Rigid Sheet, Multiple Pieces Pan Flashing (Type II)*—These pan flashings are made up of pieces of metal or plastic sills and ends that are lapped or joined and continuously sealed for watertightness (For examples, see Fig. 8, Fig 13, Fig. 12, and Fig. 13). **Warning—**Sealant selection and application are critical to performance (see 5.18).

5.16.4.3 *Flexible Membrane Pan Flashing (Type III)*—These pan flashing systems are fabricated from one or multiple pieces of a self-adhering membrane and are applied to create a watertight end dam and rear leg. See Fig. 9.

5.16.4.4 *Combination Pan Flashings (Type IV)*—These pan flashings may be assembled from a variety of rigid, flexible, and self-adhering materials in order to achieve a watertight pan flashing. See Fig. 10.

AVA Documents
Document Sharing Hub

Full document details: ASTM E2112-07(2016)

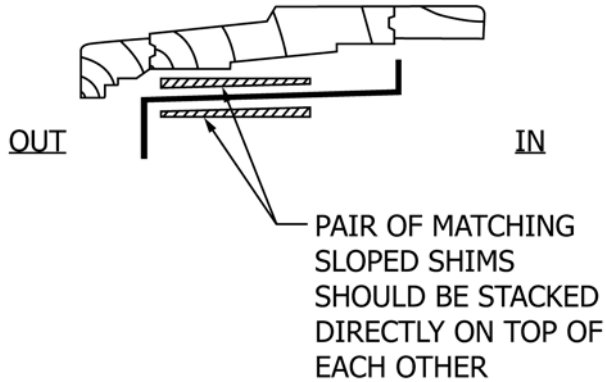

FIG. 5 .3 Paired Shims for Sloping Pan *(continued)*

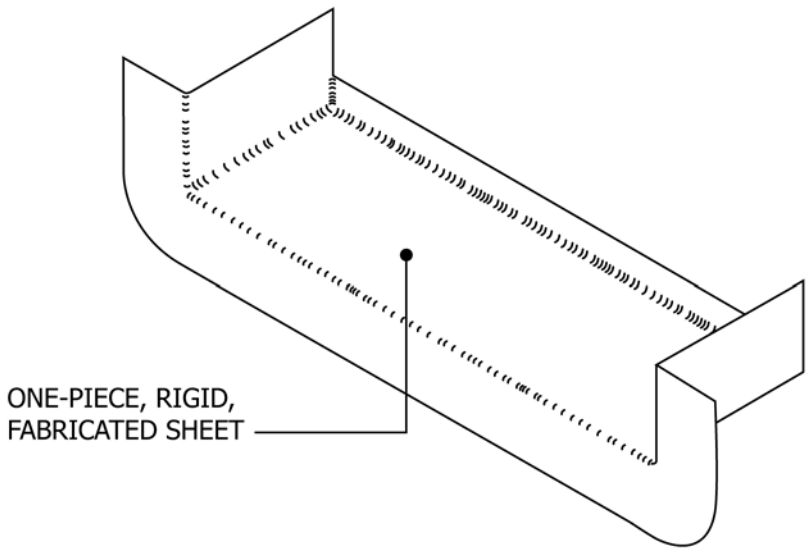

FIG. 6 Type I Pan Flashing—One-piece

5.16.5 *Installation of Pan Flashings*—The following are general criteria for the installation of pan flashing. The criteria and specific installation may need to be altered for specific window/door products and rough opening conditions. Pan flashings shall be integrated with the flashing system. See Fig. 32.

5.16.5.1 *Rigid Sheet, 1-Piece or Multiple Pieces (Type I)*—The sheet material is formed to fit into the sill rough opening and provide end dams up the jambs and a self-supporting rear leg. The pan flashing extends onto the face of the sill apron and jamb face forming a closed corner. A continuous bead of sealant is applied to the back side of the down-turned leg of the pan flashing. See Fig. 5, Fig. 12, and Fig 32. Sealant selection and bead design shall be in accordance with 5.18.

5.16.5.2 *Rigid Sheet, Multiple Pieces (Type II)*—Apply the multiple pieces at sill and jamb corners to be lapped and sealed. The pan flashing shall be assembled, to fit into the sill rough opening and provide end dams up the jambs and a self-supporting rear leg. The pan flashing extends onto the face of the sill apron and jamb face forming a closed corner. A continuous bead of sealant is applied to the back side of the down-turned leg of the pan flashing. This will allow the flashing to seal directly to the sill flashing. See Fig. 8, Fig. 12, Fig. 13, Fig 32, and Fig 33.

5.16.5.3 *Flexible Membrane System (Type III)*—Apply the flashing material to adhere along the sill and wrap into the rough opening to form a watertight pan flashing. The flashing material shall extend up the jambs and shall extend into the rough opening with provisions made to support the formation of a rear leg. The flashing shall extend onto the face of the sill apron and jamb face forming a closed outside corner. See Fig. 9 and Fig. 10. See Annex A3 and Fig. A3.4 for recommended pan flashing dimensions.

5.16.5.4 *Combination Systems, Multiple Pieces, (Type IV)*—Apply the material(s) at the sill and jamb corner in a manner that they adhere to each other. Lapped seams shall be tight and flat. The end dam shall extend up the jambs. The flashing shall extend into the rough opening with provisions made to support the formation of a rear leg. The flashing shall extend onto the face of the sill apron and jamb face forming a closed outside corner. See Fig. 11.

5.16.6 *Pan Flashing Seal Discontinuity*—Where pan flashing is used, care must be taken to ensure a drainage path between the window and the sill pan. Therefore, the bead of sealant on the mounting flange at the sill must stop at least 2

AVA Documents
Document Sharing Hub

Full document details: ASTM E2112-07(2016)

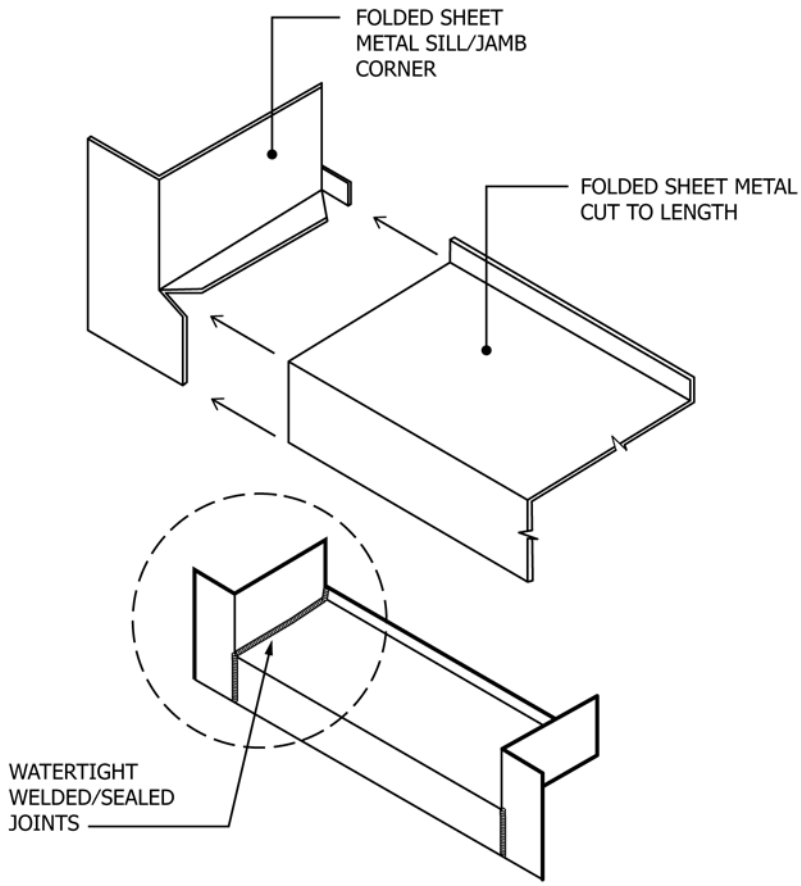

FIG. 7 Type I Pan Flashing—Multiple Pieces

gaps at least 2 in. (50 mm) wide to permit drainage from the sill pan to the exterior or the drainage plane. The gaps in the bead of sealant must be no more than 4 ft (See Fig. 6) apart, such that additional gaps are required for windows/doors wider than four feet wide. See Note 17.

5.16.7 *Pan Flashings and Air Infiltration Seals*—Air infiltration seals installed around window perimeters may, if incorrectly applied, obstruct drainage from pan flashings. To reduce the chance of this occurring, air infiltration seals shall be applied in such a manner that moisture is not trapped inside the established weather barrier plane. (See Fig. 5 and Fig. A3.3.) How this is done will be greatly affected by the specific wall material and configuration. It is imperative that this sealing system is also applied in such a manner that the window surfaces inside of the weather barrier are protected from air leakage and moisture. Air infiltration seals can reduce the required pan heights. See Annex A3.

5.16.8 *Pan Flashings as Thermal Bridges*—Pan flashings, by design, extend through most of a wall's thickness. When fabricated from sheet metal, pan flashings will act as thermal bridges. Where this may pose a problem, (for example buildings in cold climates fabricating pan flashings from material with lower thermal conductivity than sheet metal will be required. Be aware that climate and special building occupancy requirements can influence the selection of pan flashing material.

5.16.9 *Sealing Some Type II Pan Flashings*—Once the pan flashing is set in place, a sealant is applied between the upturned legs that form the end dams of the pan flashing and the side jambs of the rough opening. The sealant is tooled to create a smooth surface, which will allow water on the jamb surfaces of the rough opening to easily drain into the sill pan. Reference Annex A4—Sealants. See Fig. 12, Fig. 13, and Fig 33.

5.16.10 *Securing Pan Flashings*—The pan flashing should be secured in place to prevent movement. Avoid penetration of the horizontal leg of the pan flashing. If through-pan attachment cannot be avoided, attach the pan through the end-dam jamb tabs above the upturned rear leg (See Annex A3, Fig. A3.2). Driving fasteners through the pan will compromise the water-tightness of the pan. For this reason, attachment by driving fasteners through the pan shall be done carefully and with sealant at the fasteners. See Fig. 12 and Fig. 13. Use of pan-head screws is recommended. To install screws, drill holes in the pan at the appropriate locations, fill the holes with sealant, and drive the screws. Once screws are driven, seal over the screw heads with sealant to create a watertight installation. Once the pan flashing is secured, fillets of sealant are applied between the upper edge of the outer leg of the pan flashing and the barrier (slightly above the bottom corners of the opening), and the fillet beads are smoothed. The window unit may then be installed in the opening.

AVA Documents
Document Sharing Hub

Full document details: ASTM E2112-07(2016)

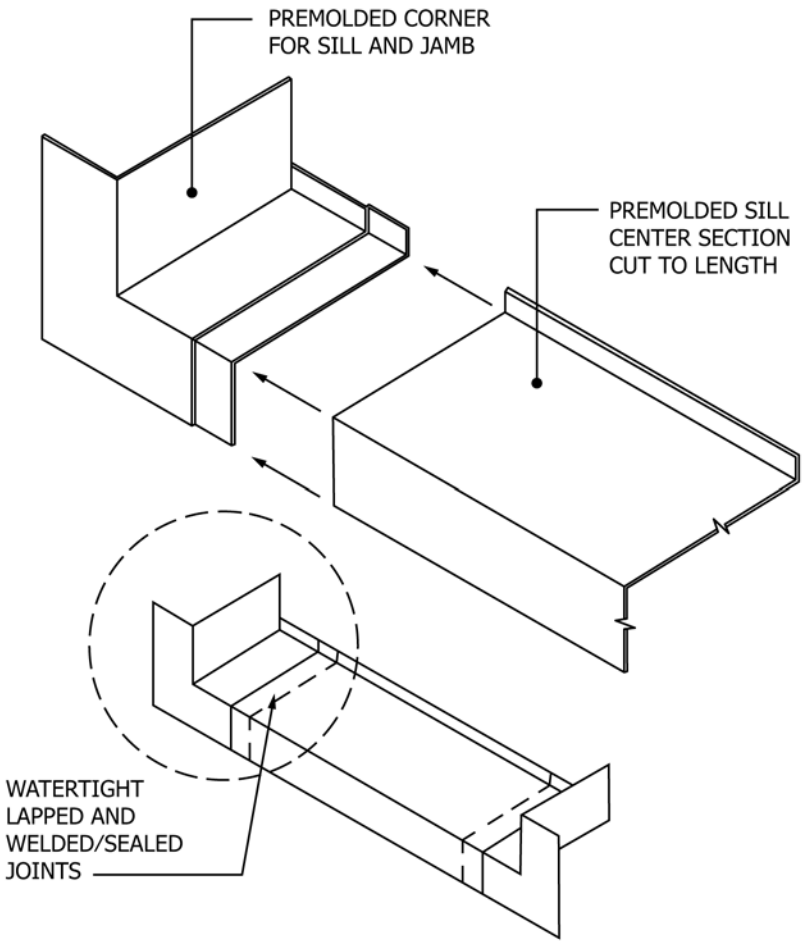

FIG. 8 Type II Pan Flashing—Multiple Pieces

5.17 *Pre-Installation Procedures:*

5.17.1 *Control of Hazardous Materials*—Hazards such as lead and asbestos are present on many older homes and shall be handled with caution. Any handling of these materials shall comply with applicable codes and standards. See ASTM Standards on Lead Hazards Associated with Buildings.

5.17.1.1 Homes built prior to 1978 are likely to have been painted with paints containing lead. Studies have shown that windows, doors, and exterior trim have the highest quantities of leaded paints and disturbing these surfaces can result in significant exposures to workers and occupants (EPA, Lead Exposure Associated with Renovation and Remodeling Activities). OSHA's Lead in Construction Standard (29 CFR 1926.62) applies to all construction work where an employee may be occupationally exposed to lead. Installation should comply with the requirements set forth in ASTM Standards on Lead Hazards Associated with Buildings.

5.17.1.2 Asbestos-containing materials can be found throughout a building in shingle siding, drywall, drywall mud, and sealants. OSHA's Asbestos Construction Standard (29 CFR 1926.1101) applies in these areas. Any disruption of these materials also triggers OSHA requirements for asbestos control.

5.17.2 *Preparation of the Opening:*

5.17.2.1 The fenestration product manufacturer's detailed installation instructions shall be used as the fenestration installer's primary guide. In the absence of such manufacturer's instructions, the procedures outlined herein shall be followed.

5.17.2.2 Measure the rough opening to ensure that it will allow installation of the fenestration product in a square, plumb, and level condition in accordance with manufacturer's instructions. If the opening will not allow correct installation, correct these deficiencies before proceeding.

5.17.2.3 Check that the fenestration products are the correct size and type for the opening, including tolerances for plumb, level, and square installation. See Fig. 6 and Fig. 13 for plumb, square, and level tolerances. (**Warning—**Rough opening trueness/racking of fenestration unit—As a general rule, fenestration units should not be racked so as to permit installation in openings that are out-of-square or out-of-plane. This practice does not recognize as acceptable any racking that would interfere with intended operation (opening and closing) of sash or doors. Even if racking does not noticeably interfere with operation of movable sash or doors it may nevertheless render the unit prone to water intrusion, air leakage, excessive noise transmission, or degrade its ability to withstand design wind loads. Some units may, however, withstand being racked to

AVA Documents
Document Sharing Hub

Full document details: ASTM E2112-07(2016)

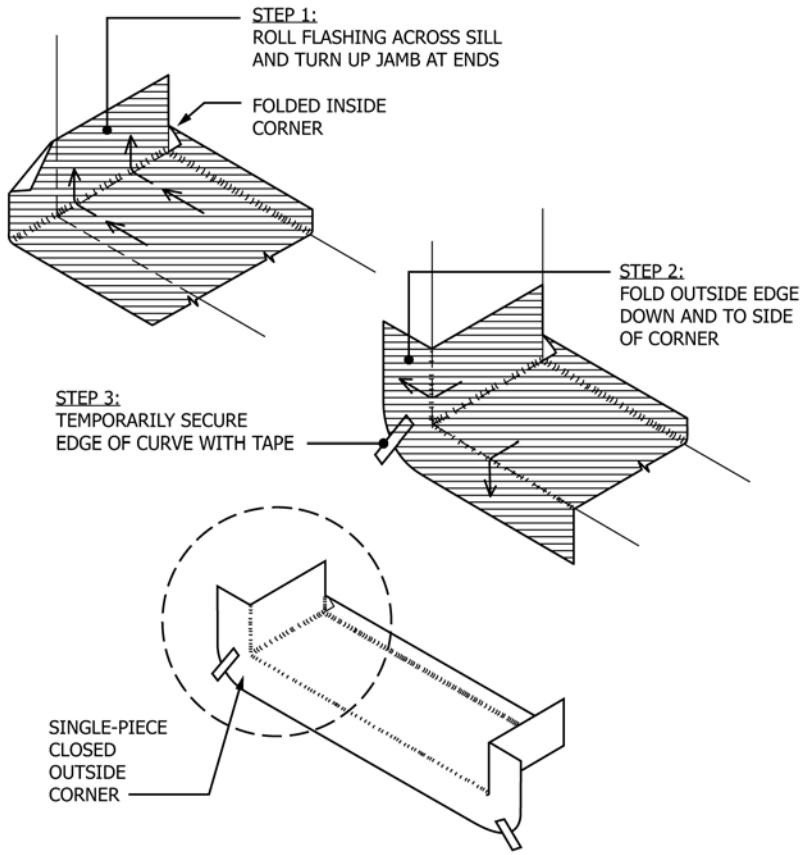

FIG. 9 TYPE III Pan Flashing—One Piece

limited degrees. Unit manufacturers will generally provide information on request concerning the tolerance of their units to being racked. The installer should obtain this tolerance information prior to beginning installation, so as to identify if rough openings will permit installation within manufacturer's tolerances. In the absence of information from the manufacturer, the installer shall assume that the units have no tolerance for being racked.)

5.17.2.4 When specified, the installer shall verify that all interfacing components (such as panning systems, drip caps or moldings, and other weather barrier systems) have been installed.

5.18 *Sealants—Selection and Use:*

5.18.1 The ability of a sealant joint to provide durable continuity (see Section 6) between building envelope components depends on joint design, selecting the right sealant, and proper sealant installation. See Table A4.1.

5.18.1.1 The installer shall follow the approving authorities' or architects' recommendations for joint geometry, sealant type, and application. In the absence of such specific recommendations, the installer should contact the manufacturers of the fenestration product, other wall system components, and sealant manufacturer for recommendations. The installer shall consider the following criteria when selecting a sealant or sealants:

(1) Anticipated joint movement and the sealants' movement capability. See Annex A4, Table A4.1.

(2) Adhesion of the sealant(s) to all joint surfaces such as frame components, flashing, siding, and other wall components. See Annex A4, Table A4.2.

(3) Compatibility of sealant(s) with coatings, adhesives, and other component surfaces.

(4) Need for primers and their use.

(5) Surface preparation such as cleaning (see 5.18.11 for guidelines on cleaning).

5.18.1.2 Sealants shall be applied and tooled in accordance with the sealant manufacturer's instructions with respect to surface preparation, application procedures, and application temperatures.

5.18.1.3 The installer shall obtain sufficient information to confirm the sealant is acceptable with respect to these criteria. Information is available from sealant manufacturer product information bulletins and web sites. See Annex A4, Table A4.1.

5.18.1.4 In barrier wall systems, the exterior joints between fenestration product frames and the building envelope shall be sealed.

5.18.2 There are four basic types of sealant joints encountered in installation: bridge, butt, fillet, and lap. Descriptions of each are given in Terminology C717. The installer should be familiar with and follow the guidelines of Guide C1193 unless the sealant manufacturer makes other recommendations. Guide C1299 provides a list of characteristics and properties of liquid applied sealants. See Annex A4 and Fig. A4.1.

AVA Documents
Document Sharing Hub

Full document details: ASTM E2112-07(2016)

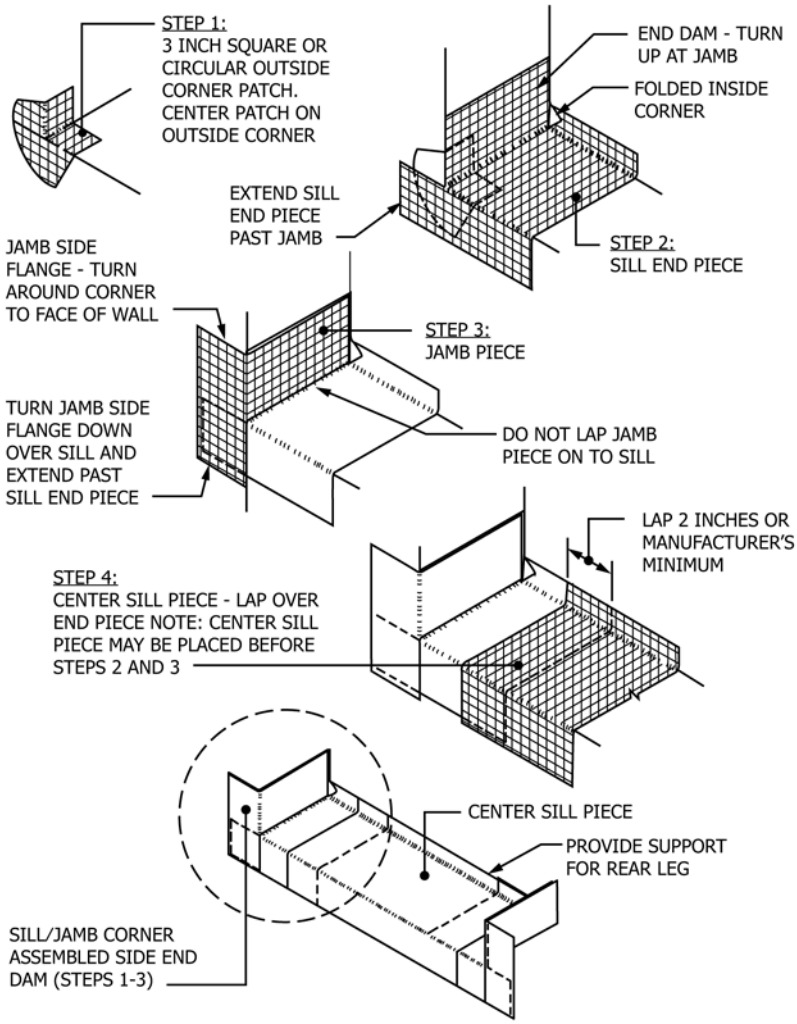

FIG. 10 TYPE III Pan Flashing—Multiple Pieces

5.18.3 If not specified in the construction documents, design sealant joints and select sealant material to accommodate expected movements.

5.18.3.1 Joints, which are designed or engineered to accommodate movement, require an elastomeric sealant meeting Specification C920. Blueprints or shop drawings should be obtained and followed to insure proper sealant joints. A Class 12-½ or Class 25 sealant should be used according to the movement expected. Refer 5.9.2.3.

5.18.3.2 In sealant joints with less than 15 % movement, sealants meeting Specifications C834, C1311 or AAMA 808.3 can be used if recommended by the manufacturers of the fenestration product and the sealant. Exercise caution when using any sealant where movement has not been anticipated and there is a lack of designed joints. The installer shall verify that movement will not exceed the capability of the sealant and that sufficient sealant dimensions are used.

5.18.4 For skylight and roof window installation where there may be accumulation of snow or the possibility of ice damming, a rubberized, asphaltic, or other weatherproofing membrane shall be used to seal the joint between the fenestration product and the building envelope prior to the installation of the roof covering. See Specification D1970/D1970M.

TABLE 5 Types of Pan Flashing Materials and Fabrication

Rigid Sheet	1-Piece or Multiple Pieces	Type I
	Multiple Pieces	Type II
Flexible Membrane	1-Piece or Multiple Pieces	Type III
Combination Systems	Multiple Pieces	Type IV

5.18.5 The selection and use of pre-cured silicone sealants or liquid applied sealants for bridge joints should carefully follow the sealant manufacturer's recommendations and instructions.

5.18.6 Applications where flashing, building paper, weather resistant barriers, or fins are *bedded* with sealant are typically low movement lap type joints where adhesion and compatibility are the primary sealant considerations. In a lap or guttering joint the sealant shall be non-hardening. For liquid-applied sealants, recommendations from the manufacturers of the components shall be followed. An application of a nominal ⅜ in. (10 mm) diameter bead of sealant is recommended. Preformed butyl tape sealants shall meet Specification C1281 or AAMA 804.3. See also 5.18.3.1. See Fig. 14.

5.18.7 When a J-shaped molding, terminus cap, or stucco mold is installed to receive the wall cladding, the placement of

AVA Documents
Document Sharing Hub

Full document details: ASTM E2112-07(2016)

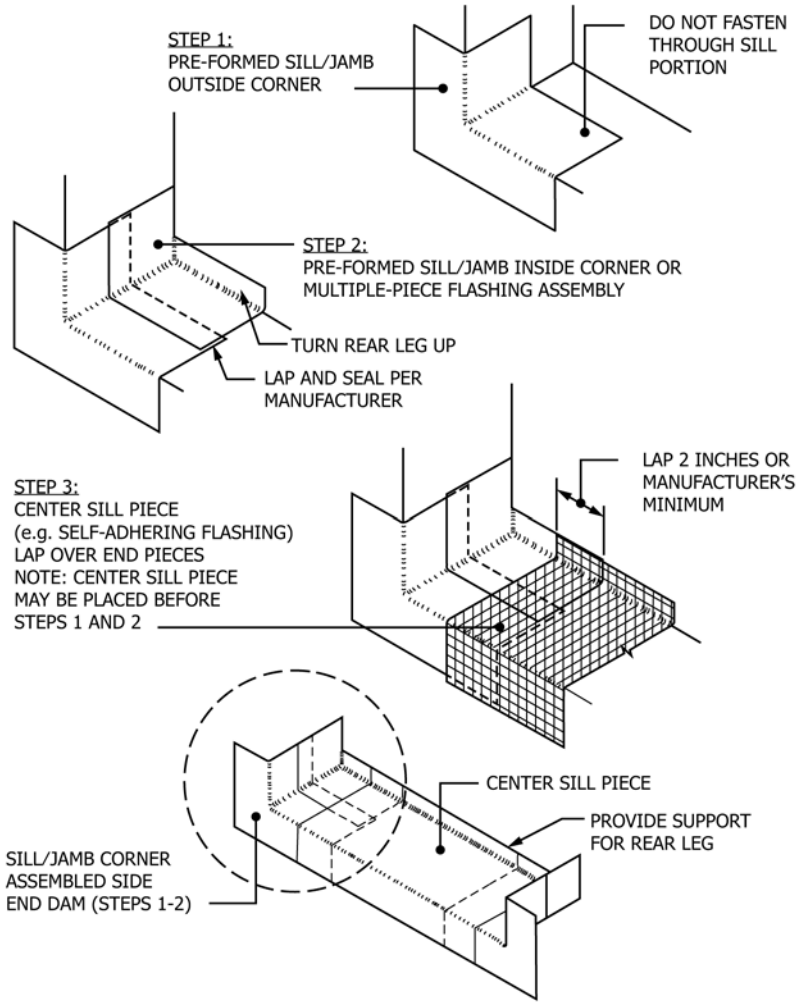

FIG. 11 TYPE IV Pan Flashing—Multiple Pieces

these devices and the fenestration product shall also be sealed according to 5.18.10, joining both fenestration product and these devices together. When receivers are not used, a properly designed perimeter joint between the fenestration product and the wall cladding is still recommended (see Fig. 15). (**Warning—**The general contractor should determine which trade provides and installs these devices. This determination will in turn determine who is responsible for sealing between the termination devices and the fenestration unit. Coordination among the different trades is essential to ensure the completion and adequacy of these seals.)

5.18.8 For door sill sealant (where no sill pan occurs), a minimum of two ⅜ in. (10 mm) parallel beads of sealant shall be applied below door sills, one on the exterior side and one on the interior side. Both beads of sealant shall make continuous contact with the door sill and substrate. The two continuous beads of sealant must be connected at both jambs, and not left open. The heads of the attachments through the sill must be thoroughly sealed. The continuous beads of sealant are to stop blow-through water. The door sill anchor or other structural attachment system shall be between the lines of sealant. See Section 9 and Fig. 36.

NOTE 17—Where pan flashing is used, care must be taken to ensure a drainage path between the door and the sill pan. Therefore, the bead of sealant on the mounting flange at the sill must have at least 2 gaps at least 2 in. (50 mm) wide to permit drainage from the sill pan to the exterior or the drainage plane. The gaps in the bead of sealant must be no more than 4 ft (120 cm) apart, such that additional gaps are required for windows/doors wider than four feet wide.

5.18.8.1 When a sill extension is used, the slope of the sill shall be continued, and at the point of its junction with the sill, it shall be sealed against water leakage.

5.18.8.2 The joint between a sill or subsill end dam and the fenestration product frame shall be sealed.

5.18.9 Frequently the installer does not apply sealant between the outermost surfaces of the fenestration product and the building envelope. The siding installer or painter is often responsible for this sealing. In such cases there shall be a coordinated effort between architect, builder, fenestration product installer, and siding installer or painter to insure that sealant selection and use and compatibility between different sealants are in accordance with this practice and the sealant manufacturer's recommendations. Refer to 4.2.

5.18.9.1 Some vinyl window manufacturers require a seal between the stucco product and the vinyl product. The coordination for the placement of this seal is the responsibility of the general contractor.

AVA Documents
Document Sharing Hub

Full document details: ASTM E2112-07(2016)

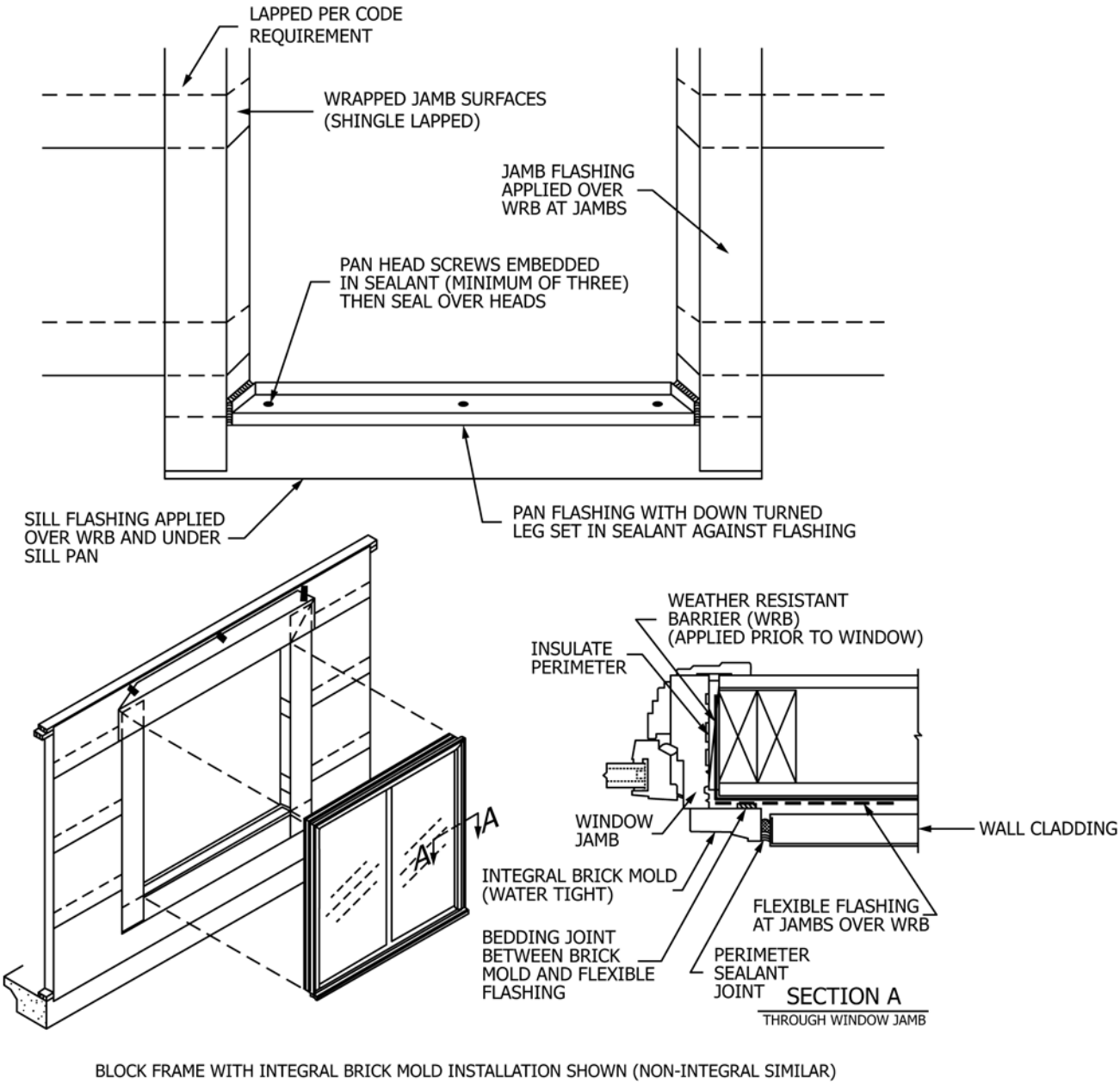

NOTE 1—One of several options of Type II Pan Flashing shown.

FIG. 12 Wrapped Jamb Surfaces (Method B1, Non-Finned Window)

5.18.10 Most sealant joints require a sealant backing material to assure proper joint shape and sealant dimensions and to prevent "3-sided adhesion" (see figures 2, 3, and 4 of AAMA excerpt in Figs. 16 and 17). Joints should be a minimum of ¼ in. (6 mm) wide. If joints are less than ¼ in. (6 mm) wide, the sealant manufacturer shall be consulted for recommendations. Refer to Guide C1193 for guidelines on the use of sealant backing materials. In general, sealant backing should be installed in butt joints so that the depth of the sealant is no more than half the joint width. Sealant depth should not be less than ¼ in. (6 mm) nor more than ½ in. (12 mm).

5.18.10.1 The following is an excerpt from AAMA 850 (Figure numbers in this section are retained from the AAMA document):

"In butt and perimeter joints, the width and depth-to-width ratio are both critical. The width shall be large enough to allow for a sufficient quantity of sealant. A general rule of thumb is ¼ in. minimum. Typically, the depth of the joint should be no smaller than half the width, but in no case should the depth be greater than the width."

"Joint depth is usually controlled by the installation of back-up material, as shown in figure 2 (Fig. 16). Backer rod is usually cylindrical and compressible. The diameter is larger than the joint and the rod is compressed when inserted into the joint. Compression of the backer rod provides the proper configuration for the sealant. Caution shall be exercised not to puncture the rod during insertion. The sealant should also not adhere to the backer rod. Three-sided adhesion will result if

AVA Documents Document Sharing Hub

Full document details: ASTM E2112-07(2016)

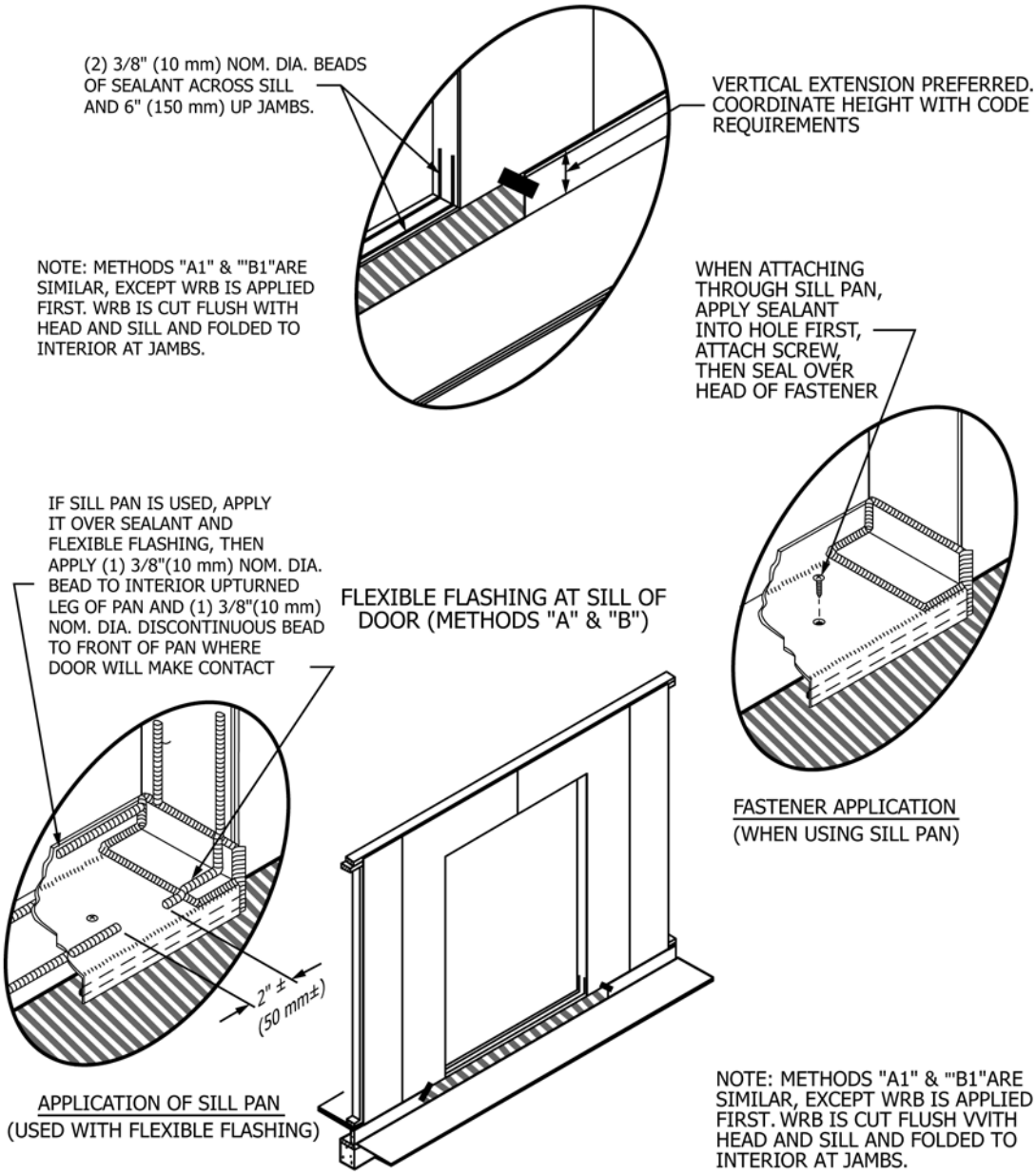

NOTE 1—One of several options of Type II Pan Flashing shown.

FIG. 13 Flexible Flashing at Sill of Door (Methods A and B)

adhesion exists between the sealant and backer rod, as shown in figure 3 (Fig. 16). Joint movement might excessively stress the sealant if the sealant is unable to slide over the rod, resulting in cohesive failure."

"In cases where insufficient depth exists to insert a backer rod, as for example with an offset, then a bond breaker should be installed to accommodate sealant elongation as shown in figure 4 (Fig. 17)."

NOTE 18—Prevents three-sided adhesion and allows sealant elongation.

5.18.11 Surfaces must be clean, dry and sound for adequate sealant adhesion. Remove dust, dirt, and other loose particles by brushing or wiping. Remove oily substances by wiping with a solvent dampened cloth. Change cloths frequently to prevent re-deposition and wipe dry with a clean cloth before solvent evaporates from the surface. Use caution when handling any solvent; be sure to understand and follow any safety statements on the solvent container. Be sure the solvent is compatible with, and will not attack, the surfaces. Abrasive cleaning may be required to obtain a sound, clean surface. Sanding, wire brushing, grinding, or cutting can be used to expose a good surface. Old sealant is removed by cutting or scraping. Silicone sealant residue must be removed by abrasion followed by a thorough cleaning with solvent. Be sure to allow residual solvent in porous surfaces to evaporate before applying sealant.

5.19 *Window Cleaner Anchors and Related Safety Hardware*—When a window cleaner anchor or a related item of safety hardware is to be installed as a part of the fenestration product, it shall be in conformance with the operating rods or

AVA Documents
Document Sharing Hub

Full document details: ASTM E2112-07(2016)

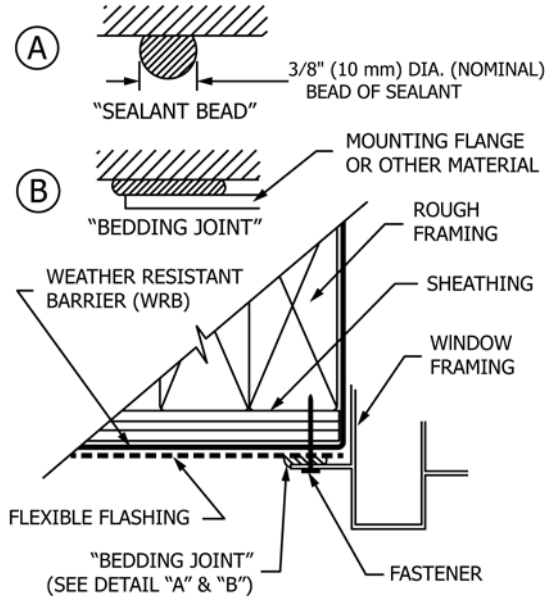

NOTE 1—Compress flange and look for squeeze out of sealant to confirm adequate bedding quality.

FIG. 14 Bedded Joint

JOINT WIDTH (W)	
1/4" - 1/2" (6 mm - 12 mm)	**1/2" - 1"** (12 mm - 25 mm)
D = W	$D = \frac{W}{2}$

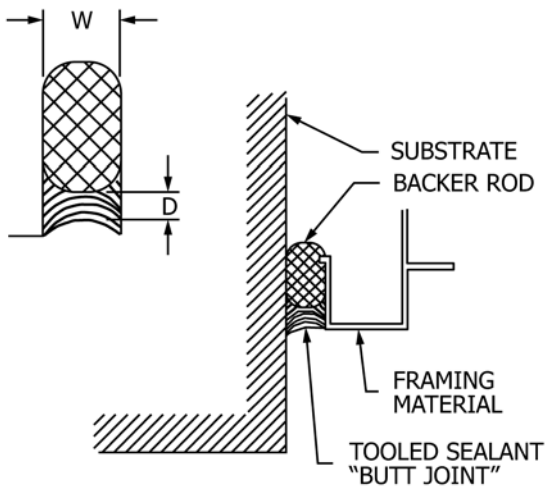

FIG. 15 Sealant Joint Depth-Width Ratio

the ASME A39.1 Standard. The window and building members that will sustain the load requirements of these items shall be in conformance with the prevailing codes.

6. Continuity Between the Fenestration Products and Other Components of the Building Envelope

6.1 It is essential that the installer understand the building system employed to prevent water and vapor penetration through the envelope.

6.2 The installer shall have an understanding of the weatherability of the fenestration products to be installed.

6.3 The installer shall understand the recommended systems of sealant, flashing, pannings, or cappings employed to integrate the fenestration product correctly into the building envelope.

6.4 When installing into new construction, the installation system should be submitted to the approving authority(ies) as a plan check to allow those authorities to determine if the fenestration system has been properly designed to integrate into the building envelope. Drawings or details showing the methodology used to connect both the fenestration product and building envelope and which clearly show the continuity of the

AVA Documents
Document Sharing Hub

Full document details: ASTM E2112-07(2016)