This international standard was developed in accordance with internationally recognized principles on standardization established in the Decision on Principles for the Development of International Standards, Guides and Recommendations issued by the World Trade Organization Technical Barriers to Trade (TBT) Committee.

Designation: E2230 – 22

Standard Practice for Thermal Qualification of Type B Packages for Radioactive Material[1]

This standard is issued under the fixed designation E2230; the number immediately following the designation indicates the year of original adoption or, in the case of revision, the year of last revision. A number in parentheses indicates the year of last reapproval. A superscript epsilon (ε) indicates an editorial change since the last revision or reapproval.

1. Scope

1.1 This practice defines detailed methods for thermal qualification of "Type B" radioactive materials packages under Title 10, Code of Federal Regulations, Part 71 (10CFR71) in the United States or, under International Atomic Energy Agency Regulation SSR-6. Under these regulations, packages transporting what are designated to be Type B quantities of radioactive material shall be demonstrated to be capable of withstanding a sequence of hypothetical accidents without significant release of contents.

1.2 The unit system (SI metric or English) used for thermal qualification shall be agreed upon prior to submission of information to the certification authority. If SI units are to be standard, then use IEEE/ASTM SI-10. Additional units given in parentheses are for information purposes only.

1.3 *This standard does not purport to address all of the safety concerns, if any, associated with its use. It is the responsibility of the user of this standard to establish appropriate safety, health, and environmental practices and determine the applicability of regulatory limitations prior to use.*

1.4 *This standard is used to measure and describe the response of materials, products, or assemblies to heat and flame under controlled conditions, but does not by itself incorporate all factors required for fire hazard or fire risk assessment of the materials, products, or assemblies under actual fire conditions.*

1.5 *Fire testing is inherently hazardous. Adequate safeguards for personnel and property shall be employed in conducting these tests.*

1.6 *This international standard was developed in accordance with internationally recognized principles on standardization established in the Decision on Principles for the Development of International Standards, Guides and Recommendations issued by the World Trade Organization Technical Barriers to Trade (TBT) Committee.*

2. Referenced Documents

2.1 *ASTM Standards:*[2]

E176 Terminology of Fire Standards

IEEE/ASTM SI-10 International System of Units (SI) The Modernized Metric System

2.2 *Federal Standard:*

Title 10, Code of Federal Regulations, Part 71 (10CFR71), *Packaging and Transportation of Radioactive Material*, United States Government Printing Office, October 1, 2004

2.3 *Nuclear Regulatory Commission Standards:*

Standard Format and Content of Part 71 Applications for Approval of Packaging of Type B Large Quantity and Fissile Radioactive Material, Regulatory Guide 7.9, United States Nuclear Regulatory Commission, United States Government Printing Office, 1986

2.4 *International Atomic Energy Agency Standards:*

Regulations for the Safe Transport of Radioactive Material, No. SSR-6 (IAEA SSR-6 Revised) International Atomic Energy Agency, Vienna, Austria, 2018

Advisory Material for the IAEA Regulations for the Safe Transport of Radioactive Material (2012 Edition), No. SSG-26, (IAEA SSG-26) International Atomic Energy Agency, Vienna, Austria, 2014

2.5 *American Society of Mechanical Engineers Standard:*

Quality Assurance Program Requirements for Nuclear Facilities, NQA-1, American Society of Mechanical Engineers, New York, 2001

2.6 *International Organization for Standards (ISO) Standard:*

ISO 9000:2000, Quality Management Systems—Fundamentals and Vocabulary, International Organization for Standards (ISO), Geneva, Switzerland, 2000

ISO 13943 Fire Safety – Vocabulary, International Organization for Standards (ISO), Geneva, Switzerland, 2017

[1] This practice is under the jurisdiction of ASTM Committee C26 on Nuclear Fuel Cycle and is the direct responsibility of Subcommittee C26.13 on Spent Fuel and High Level Waste.

Current edition approved Jan. 1, 2022. Published April 2022. Originally approved in 2002. Last previous edition approved in 2013 as E2230 – 13. DOI: 10.1520/E2230-22.

[2] For referenced ASTM standards, visit the ASTM website, www.astm.org, or contact ASTM Customer Service at service@astm.org. For *Annual Book of ASTM Standards* volume information, refer to the standard's Document Summary page on the ASTM website.

Copyright © ASTM International, 100 Barr Harbor Drive, PO Box C700, West Conshohocken, PA 19428-2959. United States

Documents
Document Sharing Hub
Full document details: ASTM E2230-22

3. Terminology

3.1 *Definitions*—For definitions of terms used in this test method refer to the terminology contained in Terminology E176 and ISO 13943 (Fire Safety – Vocabulary). In case of conflict between Terminology E176 and ISO 13943, the definitions given in Terminology E176 shall prevail.

3.2 *Definitions of Terms Specific to This Standard:*

3.2.1 *hypothetical accident conditions, n*—a series of accident environments, defined by regulation, that a Type B package must survive without significant loss of contents.

3.2.2 *insolation, n*—solar energy incident on the surface of a package.

3.2.3 *normal conditions of transport, n*—a range of conditions, defined by regulation, that a package must withstand during normal usage.

3.2.4 *regulatory hydrocarbon fire, n*—a fire environment, one of the hypothetical accident conditions, defined by regulation, that a package shall survive for 30 min without significant release of contents.

3.2.5 *thermal qualification, n*—the portion of the certification process for a radioactive materials transportation package that includes the submittal, review, and approval of a Safety Analysis Report for Packages (SARP) through an appropriate regulatory authority, and which demonstrates that the package meets the thermal requirements stated in the regulations.

3.2.6 *Type B package, n*—a transportation package that is licensed to carry what the regulations define to be a Type B quantity of a specific radioactive material or materials.

4. Summary of Practice

4.1 This document outlines four methods for meeting the thermal qualification requirements: qualification by analysis, pool fire testing, furnace testing, and radiant heat testing. The choice of the certification method for a particular package is based on discussions between the package suppliers and the appropriate regulatory authorities prior to the start of the qualification process. Factors that influence the choice of method are package size, construction and cost, as well as hazards associated with certification process. Environmental factors such as air and water pollution are increasingly a factor in choice of qualification method. Specific benefits and limitations for each method are discussed in the sections covering the particular methods.

4.2 The complete hypothetical accident condition sequence consists of a drop test, a puncture test, and a 30-min hydrocarbon fire test, commonly called a pool fire test, on the package. Submersion tests on undamaged packages are also required, and smaller packages are also required to survive crush tests that simulate handling accidents. Details of the tests and test sequences are given in the regulations cited. This document focuses on thermal qualification, which is similar in both the U.S. and IAEA regulations. A summary of important differences is included as Appendix X3 to this document. The overall thermal test requirements are described generally in Part 71.73 of 10CFR71 and in Section VII of SSR-6. Additional guidance on thermal tests is also included in IAEA SSG-26.

4.3 The regulatory thermal test is intended to simulate a 30-min exposure to a fully engulfing pool fire that occurs if a transportation accident involves the spill of large quantities of hydrocarbon fuels from a tank truck or similar vehicle. The regulations are "mode independent" meaning that they are intended to cover packages for a wide range of transportation modes such as truck and rail.

5. Significance and Use

5.1 The major objective of this practice is to provide a common reference document for both applicants and certification authorities on the accepted practices for accomplishing package thermal qualification. Details and methods for accomplishing qualification are described in this document in more specific detail than available in the regulations. Methods that have been shown by experience to lead to successful qualification are emphasized. Possible problems and pitfalls that lead to unsatisfactory results are also described.

5.2 The work described in this standard practice shall be done under a quality assurance program that is accepted by the regulatory authority that certifies the package for use. For packages certified in the United States, 10 CFR 71 Subpart H shall be used as the basis for the quality assurance (QA) program, while for international certification, ISO 9000 usually defines the appropriate program. The quality assurance program shall be in place and functioning prior to the initiation of any physical or analytical testing activities and prior to submittal of any information to the certifying authority.

TEST METHODS

6. General Information

6.1 In preparing a Safety Analysis Report for Packaging (SARP), the normal transport and accident thermal conditions specified in 10CFR71 or IAEA SSR-6 shall be addressed. For approval in the United States, reports addressing the thermal issues shall be included in a SARP prepared according to the format described in Nuclear Regulatory Commission (NRC) Regulatory Guide 7.9. Upon review, a package is considered qualified if material temperatures are within acceptable limits, temperature gradients lead to acceptable thermal stresses, the cavity gas pressure is within design limits, and safety features continue to function over the entire temperature range. Test initial conditions vary with regulation, but are intended to give the most unfavorable normal ambient temperature for the feature under consideration, and corresponding internal pressures are usually at the maximum normal values unless a lower pressure is shown to be more unfavorable. Depending on the regulation used, the ambient air temperature is in the –29 °C (–20 °F) to 38 °C (100 °F) range. Normal transport requirements include a maximum air temperature of 38°C (100°F), insolation, and a cold temperature of –40 °C (–40 °F). Regulations also include a maximum package surface temperatures for personnel protection of 50 °C (122 °F). See Appendix X3 for clarification of differences between U.S. and international regulations.

6.2 Hypothetical accident thermal requirements stated in Part 71.73 or IAEA SSR-6, Section VII call for a 30 min

AVA Documents
Document Sharing Hub

Full document details: ASTM E2230-22

exposure of the entire container to a radiation environment of 800 °C (1475 °F) with a flame emissivity of 0.9. The surface emissivity of the package shall be 0.8 or the package surface value, whichever is greater. With temperatures and emissivities stated in the specification, the basic laws of radiation heat transfer permit direct calculation of the resulting radiant heat flux to a package surface. This means that what appears at first glance to be a flame or furnace temperature specification is in reality a heat flux specification for testing. Testing shall be conducted with this point in mind.

6.3 Two definitions of flame emissivity exist, and this causes confusion during the qualification process. Siegel and Howell, 2001, provide the textbook definition for a cloud of hot soot particles representing a typical flame zone in open pool fires. In this definition the black body emissive power of the flame, σT^4, is multiplied by the flame emissivity, ε, in order to account for the fact that soot clouds in flames behave as if they were weak black body emitters. A second definition of flame emissivity, often used for package analysis, assumes that the flame emissivity, ε, is the surface emissivity of a large, high-temperature, gray-body surface that both emits and reflects energy and completely surrounds the package under analysis. The second definition leads to slightly higher (conservative) heat fluxes to the package surface, and also leads to a zero heat flux as the package surface reaches the fire temperature. For the first definition, the heat flux falls to zero while the package surface is somewhat below the fire temperature. For package qualification, use of the second definition is often more convenient, especially with computer codes that model surface-to-surface thermal radiation, and is usually permitted by regulatory authorities.

6.4 Convective heat transfer from moving air at 800°C shall also be included in the analysis of the hypothetical accident condition. Convection correlations shall be chosen to conform to the configuration (vertical or horizontal, flat or curved surface) that is used for package transport. Typical flow velocities for combustion gases measured in large fires range are in the 1 to 10 m/s range with mean velocities near the middle of that range (see Schneider and Kent, 1989, Gregory, et al, 1987, and Koski, et al, 1996). No external non-natural cooling of the package after heat input is permitted after the fire event,, and combustion shall proceed until it stops naturally. During the fire, effects of solar radiation are often neglected for analysis and test purposes.

6.5 For purposes of analysis, the hypothetical accident thermal conditions are specified by the surface heat flux values. Peak regulatory heat fluxes for low surface temperatures typically range from 55 to 65 kW/m^2. Convective heat transfer from air is estimated from convective heat transfer correlations, and contributes of 15 to 20 % of the total heat flux. The value of 15 to 20 % value is consistent with experimental estimates. Recent versions of the regulations specify moving, hot air for convection calculations, and an appropriate forced convection correlation shall be used in place of the older practice that assumed still air convection. A further discussion of heat flux values is provided in 7.2.

6.6 While 10CFR71 or SSR-6 values represent typical package average heat fluxes in pool fires, large variations in heat flux depending on both time and location have been observed in actual pool fires. Local heat fluxes as high as 150 kW/m^2 under low wind conditions are routinely observed for low package surface temperatures. For high winds, heat fluxes as high as 400 kW/m^2 are observed locally. Local flux values are a function of several parameters, including height above the pool. Thus the size, shape, and construction of the package affects local heat flux conditions. Designers shall keep the possible differences between the hypothetical accident and actual test conditions in mind during the design and testing process. These differences explain some unpleasant surprises such as localized high seal or cargo temperatures that have occurred during the testing process.

6.7 For proper testing, good simulations of both the regulatory hydrocarbon fire heat flux transient and resulting material temperatures shall be achieved. Unless both the heat flux and material surface temperature transients are simultaneously reproduced, then the thermal stresses resulting from material temperature gradients and the final container temperature are reported to be erroneously high or low. Some test methods are better suited to meeting these required transient conditions for a particular package than others. The relative benefits and limitations of the various methods in simulating the pool fire environment are discussed in the following sections.

7. Procedure

7.1 *Qualification by Analysis*

7.1.1 *Benefits, Limitations:*

7.1.1.1 The objective of thermal qualification of radioactive material transportation packages by analysis is to ensure that containment of the contents, shielding of radiation from the contents, and the sub-criticality of the contents is maintained per the regulations. The analysis determines the thermal behavior in response to the thermal conditions specified in the regulations for normal conditions of transport and for hypothetical accident conditions by calculating the maximum temperatures and temperature gradients for the various components of the package being qualified. Refer to Appendix X3 for specific requirements of the regulations.

7.1.1.2 Temperatures that are typically determined by analysis are package surface temperatures and the temperature distribution throughout the package during normal conditions of transport and during thermal accident conditions. In addition, maximum pressure inside the package is determined for both normal and accident conditions.

7.1.1.3 While an analysis cannot fully take place of an actual test, performing the thermal analysis on a radioactive material transportation package allows the applicant to estimate, with relatively high accuracy, the anticipated thermal behavior of the package during both normal and accident conditions without actually exposing a package to the extreme conditions of the thermal qualification tests described in Section 6. Qualification by analysis is also a necessity in those cases where only a design is being qualified and an actual specimen for a radioactive materials package does not exist.

AVA Documents
Document Sharing Hub

Full document details: ASTM E2230-22

7.1.1.4 While today's thermal codes provide a useful tool to perform the thermal qualification by analysis producing reliable results, the limitation of any method lies in the experience of the user, the completeness of the model and accuracy of the input data. Since in these analyses the heat transfer is the main phenomenon being modeled and since it is mostly nonlinear, the thermal code used shall be verified against available data or benchmarked against other codes that have been verified. In addition, limitations of analyses for determining the thermal behavior of a package include as-built package geometry, real material properties including phase changes and destruction of insulation, and real fire characteristics, including actual convection. Code software used shall be managed in a manner consistent with the appropriate QA methodology outlined in NQA-1 or ISO 9000 as appropriate.

7.1.2 *Model Preparation*—This section describes the various aspects a thermal model shall include and the methodology of preparing a representative model.

7.1.2.1 A common approach to analyzing a package is to model the package as a drum or in a cylindrical configuration. This approach considers the package as an axisymmetric circular cylinder (outer shell) with a constant internal heat source. Another common approach is to model the packages as a finite length right circular cylinder with an impact limiter (which also acts as a thermal insulator to the package). The outer shell will surround a cylindrical structure that contains the content heat source.

7.1.2.2 Thermal protection of a typical radioactive materials package includes the impact limiters placed at the ends of the package and the thermal shield surrounding the cylindrical section of the package. The impact limiters consist of a low-density material, such as polyurethane foam, wood, or other organic material enclosed in a steel shell, hollow steel structures or aluminum honeycomb design structure. The low-density configuration impact limiter usually has a low effective thermal conductivity.

7.1.2.3 The low thermal conductivity impact limiter reduces the heat transfer from the ends of the cask during normal conditions of transport, and into the ends of the cask during hypothetical accident conditions. Analysis often shows that for polyurethane foam impact limiters, the foam burns during a hypothetical accident and off-gases creating pressure within the impact limiter structure. This, along with the thermal expansion of the materials is to be considered in order to provide for the worst case conduction/insulating properties. Credit for the insulating properties of the impact limiters shall be taken only when structural analyses can demonstrate that the limiter remains in place under hypothetical accident conditions.

7.1.2.4 The thermal shield of radioactive waste and spent fuel packages typically is a stainless steel shell surrounding the cylindrical structural shell of the package. A gap is created between the thermal shield and the structural shell of the package. Because of the low conductivity of air contained in the gap, the heat resistance of the gap greatly reduces the heat transfer rate during both normal conditions of transport and hypothetical accident conditions. Heat transfer across the gap between the thermal shield and structural shell is modeled with conduction and radiation. Natural convection in the gap is usually neglected. Drum type packages usually have an integral thermal shield.

7.1.2.5 The package contents and their heat generation shall be considered in the model preparation. The impact limiter and the thermal shield insulation properties will result in slightly elevated temperatures during normal conditions of transport due to the resistance to heat flow from the package. Thus the package interior has higher temperatures than the surrounding ambient temperature.

7.1.2.6 When creating the model and selecting the nodes, it is important to represent all materials of construction and components essential to containment in the model. Fig. 1 shows a typical nodal network/finite difference model with node selection for temperature information on a package with an impact limiter. Additional nodes will need to be created and utilized for an accurate Finite Element Analysis or Finite Difference Analysis model.

7.1.2.7 The mesh selected in the model for temperature profile analysis in the thermal portion of the hypothetical accident analysis shall be varied depending on the temperature gradients. The finest mesh is located near the outer surface of the package where the steepest temperature gradients occur. The mesh size is increased as temperature gradients decrease, which usually occurs as the distance from the surface increases. A test for proper mesh size is to refine the mesh further and demonstrate that no significant change in calculated temperatures results from the refinement.

7.1.2.8 *Thermo-physical Properties of Typical Materials:*

(1) The thermal properties of the materials of construction need to be defined and documented as they are critical to achieving meaningful results from the analysis. Properties of the various components involved are often obtained from reference materials but all sources are to be verified for reliability by determining that the properties were measured in accordance with accepted standards (that is, ASTM) and under an accepted quality assurance program (that is, NQA-1 or ISO 9000).

(2) The material properties used need to cover the temperature range of the conditions being analyzed. If materials have properties that change with temperature, they shall be modeled with the appropriate variable properties. Note that uncertainties in the temperature dependence of material property data increase with the variation of temperature from "room temperature." Additional testing is necessary for any material that does not have well defined material properties.

(3) Parts that are small or thin, or both, and do not have a measurable affect on the overall heat transfer rates are often omitted from the model. Typical examples for this are thin parts that have high thermal conductivity and are not separated by air gaps from other components of the package being analyzed. Thin parts separated by gaps, however, act as thermal radiation shields that greatly affect the overall heat transfer rate and shall be considered.

(4) When a material phase change or decomposition is expected to occur, the analysis shall consider replacing the material properties with conservative values. For example, polyurethane begins to decompose at 200 to 400 °F and the

AVA Documents
Document Sharing Hub

Full document details: ASTM E2230-22

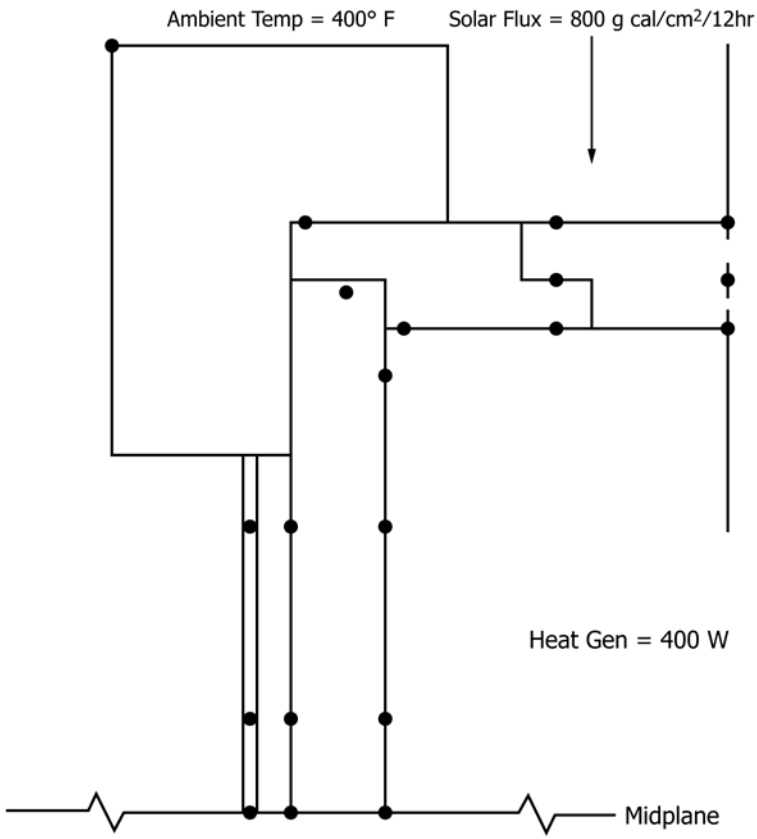

FIG. 1 Example of Node Selection When Modeling a Package

analyst often considers replacing the polyurethane properties with those of air at the same temperature. Note that the thermal properties of polyurethane are similar to those of air and actually the polyurethane properties are not critical since the use of polyurethane results in a nearly adiabatic, that is, well insulated, surface during hypothetical accident conditions.

(5) Radiation heat transfer occurs at the outer surfaces of a package and also in the gap between the thermal shield and the structural shell. Therefore, the consideration of the surface emittance of these surfaces is critical to the model. Emittance values of the package exterior surface for the fire are specified in the regulations.

(6) The analyst shall be familiar with the how the code models radiation and, in specific, surface emissivity or absorptivity (also treated by some codes as reflectivity or albedo). In general, conservative surface emittance values are to be used in the analysis, that is, emittance value of 0.9 or unity (black body) for fire conditions, and an emittance of 0.8 shall be assumed for the outer surfaces in accordance with regulations. Package interior gap surfaces might be assumed as manufactured for pre-fire conditions. Use of other than conservative values shall be justified.

7.1.2.9 *Model Preparation for Normal Conditions of Transport Thermal Evaluation:*

(1) A steady-state analysis for normal conditions of transport that follows 10CFR71.71 shall assume constant insolation of 387.67 W/m^2 on horizontal flat surfaces exposed to the sun (which is equivalent to the total insolation specified in 10CFR71.71(c)(1) of 800 g-cal/cm^2 for a 12-h period), 96.92 W/m^2(200 g-cal/cm^2 for a 12-h period) for non-horizontal flat surfaces, and 193.83 W/m^2 (400 g-cal/cm^2 for a 12-h period) for curved surfaces. Ambient temperature shall be 38 °C (100 °F). Note that insolation depends on the shape and orientation of the package surface. A transient analysis of the normal conditions of transport can be performed instead of a steady-state analysis. Thermal loads for a transient analysis are different from those discussed in this paragraph.

(2) In addition, representative internal heat generation shall be considered when preparing the model to determine the temperature distribution of the package.

(3) The model shall address external natural convection and radiation boundary conditions and temperature property variations.

(4) The temperature distribution of the package is assumed symmetric about the vertical axis and its horizontal mid-plane. The heat transfer model needs to be defined, for example, two-dimensional axisymmetric heat transfer (radial and axial). The model shall address insolation on the package surfaces. Radiation heat exchange at the package interior surfaces shall be addressed.

(5) Heat transfer within the contents of the package is often omitted in the special case where the heat generated in the contents is uniformly applied to the interior surfaces of the package. It is possible to use the package symmetry in the

Documents
Document Sharing Hub

Full document details: ASTM E2230-22

model to facilitate even heat transfer considerations. Spent fuel packages require special consideration as the bulk of the heat generated by the contents is transferred radially to the packaging due to the large aspect ratio and the impact limiters on the ends of the package.

(6) The inside containment vessel temperature causes the internal pressure to be elevated above atmospheric pressure. The internal pressure at steady state are estimated by assuming the atmosphere contains dry air at an appropriate pressure and temperature when the package is closed. If the package contains water, assume that at steady-state transport conditions the air is saturated with water vapor. The internal pressure is equal to the sum of the dry air and the vapor pressure of water at the temperature of the environment within the containment vessel for normal conditions of transport. The stresses due to pressurization of the package need to be addressed as part of the structural analysis.

7.1.2.10 *Model Preparation for Hypothetical Accident Thermal Qualification:*

(1) The effects of the hypothetical accident thermal conditions on the package need to be evaluated. The hypothetical accident thermal conditions are defined in the regulations. The various test conditions shall be applied sequentially, which means that the thermal test follows the drop and the puncture tests. The reduction of the insulating capabilities of the impact limiter caused by the free drop and puncture test shall be considered in the analysis of packages. In cases where drop and puncture damage to the impact limiters cannot be modeled in sufficient detail, two cases are analyzed to envelope the performance of the impact limiters during a fire.

(2) The initial temperature distribution in the package prior to the fire shall be that determined for either the normal conditions of transport (38°C with insolation) [SSR-6, §728] or that determined for the case of defining the type of shipment (exclusive or nonexclusive) from 10 CFR 71.43 (g) [10 CFR 71.73 (b)]. Usually, undamaged packages lead to higher pre-fire temperatures because package insulation is undamaged. However in cases where damaged conditions lead to higher pre-fire temperatures, those temperatures shall be used instead.

(3) The thermal conditions imposed on the package during hypothetical accident conditions are that the package, with the initial temperature distribution as determined above, is subjected to a fire of 800 °C (1475 °F) for a period of 30 min. After the 30-min period, the source fire is assumed extinguished and the ambient temperature reduced to 38 °C (100 °F). Any ongoing combustion that continues after the fire shall be accounted for in the analysis. Flames of the ongoing combustion are not allowed to be extinguished. In addition to the natural convection to the ambient air and radiation to the environment, the package shall be subject to insolation during the post-fire cool-down.

(4) To determine the effect of the reduced insulating capabilities of the impact limiter, two cases are analyzed. The first one assumes that the free drop and puncture tests had minor effects in thermal performance of the package during a hypothetical accident. The second case assumes that the insulating capabilities of the impact limiter have been completely lost. This assumption provides a conservative approach. These two cases envelop the best and worst case scenarios during the hypothetical accident thermal evaluation.

(5) Underlying assumptions shall be documented and include:

Enclosure radiation
External radiation
Natural convection
Insolation
Internal heat dissipation
Internal convection

7.1.3 *Example of Package Model:*

7.1.3.1 For demonstration purposes, consider that the example package (see *Safety Analysis Report for the 10-135 Radwaste Shipping Cask, 1999*) is a steel encased lead shielded cask intended for solid radioactive material (see Fig. 2). Overall dimensions are 2.85 m (112 in.) diameter by 3.3 m (130 in.) height. It consists of two (2) concentric carbon steel cylindrical shells surrounding a 89 mm (3.5 in.) thick lead shield. The 13 mm (0.5 in.) thick inner shell has a 1.67 m (66 in.) internal diameter and the 25 mm (1 in.) thick outer shell has a 1.93 m (76 in.) outside diameter. The base is welded to the shells. The top of the package is provided with primary and secondary lids of a stepped down design constructed of two 75 mm (3 in.) thick plates joined together to form a 150 mm (6 in.) thick lid. The lids are secured with bolts. Lid interfaces are provided with high temperature silicone gaskets.

7.1.3.2 The initial temperatures are determined from the normal conditions of transport assuming a 38 °C (100 °F) ambient temperature with insolation. Fig. 3 shows typical steady-state temperatures under these conditions and an assumed 400W heat generation from the contents of a typical package. For packages with large thermal mass, or fully enclosed by a thick insulating medium, such as polyurethane foam, a 24-h average insolation value is often used to determine temperatures of interior components.

7.1.3.3 Two impact limiters are located at the top and bottom of the package. The impact limiters are 10-gauge stainless steel shells filled with rigid polyurethane. The inner surfaces of the body and the lid are clad with 12-gauge stainless steel. The exposed portion of the cask body is provided with a 10-gauge stainless steel thermal shield. A 6.4 mm (0.25 in.) gap between the cask body and the thermal shield is maintained by spacers. A potential issue during thermal qualification is the manufacturer's ability to maintain uniform gap width and potential effect of gap variation on the thermal results. The effect of gap widths in the as-manufactured package shall be considered and discussed by the analyst.

7.1.3.4 Fig. 4 shows the predicted temperatures of a typical package after 30 min following the initiation of the flame environment for the cask with the impact limiter attached. The model was created using TAS of Harvard Thermal.

7.1.3.5 After 30 min, the ambient temperature is reduced from 800 °C (1475 °F) to 38 °C (100 °F) and, consequently, the package begins to lose heat to the environment by natural convection to the still air and radiation to the environment. However, the temperature in some regions of the package continues to increase for some time due to heat conduction

AVA Documents
Document Sharing Hub

Full document details: ASTM E2230-22

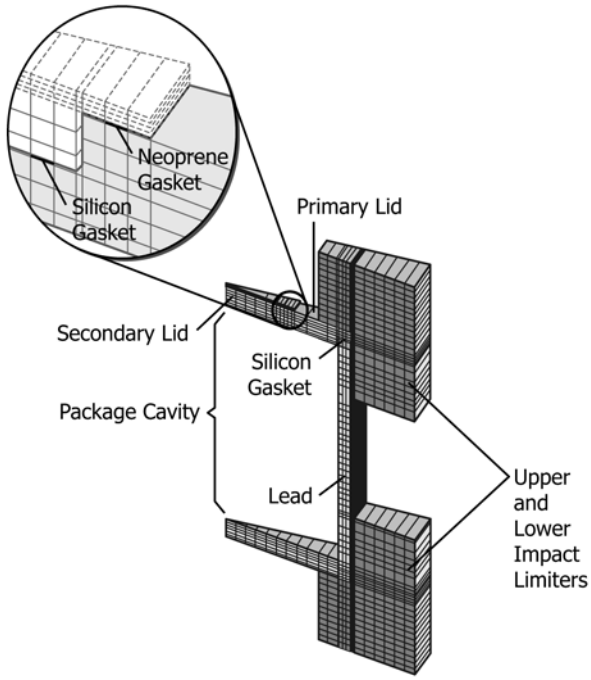

FIG. 2 Typical Package With Impact Limiters at Steady State (Using TAS)

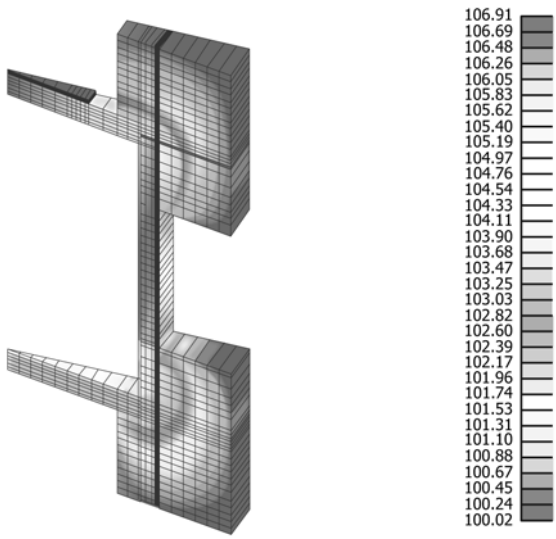

NOTE 1—Temperatures are in °F. Note that in the original figure, colors were used to represent temperature variations.

FIG. 3 Initial Temperatures for Transient Analysis for a Typical Package With Impact Limiters (Using TAS)

from surrounding regions of higher temperatures. These local temperatures will continue to increase until the content temperature exceeds the temperature of the surrounding package components. The rate at which the package cools will be reduced as insolation is applied during the cool-down time. If, as permitted in the U. S. (10 CFR 71.73(b)), pre-fire conditions are determined without the insolation specified in 10 CFR 71.71, then initial package surface and contents temperatures will often be lower than the steady state temperatures reached with insolation after the fire. If package temperatures without insolation are lower at the start of the fire, initial fire heat fluxes to the package surface will be higher, compensating, at least partially, for the lack of pre-fire insolation. For packages to be qualified under both U. S. and international regulations, this effect shall be addressed and quantified for the regulator.

7.1.4 *Additional Information to be Reported:*

7.1.4.1 The results of the analysis shall be tabulated to summarize the maximum temperatures resulting from the hypothetical accident condition for each material of construction. In addition, graph(s) shall be included showing temperature as a function of time for representative and critical/unique locations on the container during a hypothetical accident. The

AVA Documents
Document Sharing Hub

Full document details: ASTM E2230-22

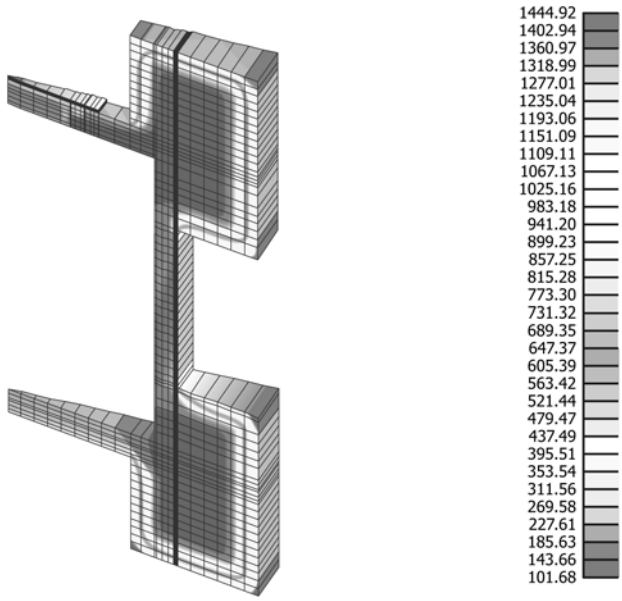

NOTE 1—Temperatures are in °F. Note that in the original figure, colors were used to represent temperature variations.

FIG. 4 Temperatures After the 30-Min Fire on a Typical Package With Impact Limiters Attached (Using TAS)

interval selected shall be long enough to show all component temperatures descending with time. An example is shown below in Fig. 5.

7.1.4.2 Changes in the internal pressure shall be addressed. The internal pressure typically increases during the hypothetical accident due to heating of contents. Chemical decomposition of the packaging materials and package contents shall be considered and appropriately addressed.

7.1.4.3 Consideration of thermal stresses due to both normal conditions of transport and hypothetical accident conditions shall also be included in the analysis.

7.1.4.4 Post-fire steady state temperatures shall be analyzed. Any resultant damage (for example, smoldering or melting of a neutron or gamma shield, or both) or change in the emissivity of the surface of the package shall be evaluated with respect to the impact on the post-accident "normal" temperatures.

7.1.5 *Analysis Conduct:*

7.1.5.1 General-purpose heat transfer codes exist for performing the thermal analysis of packages for the transport of radioactive materials. These codes model heat transfer phenomena (conduction, convection and radiation) for multidimensional geometries with linear and non-linear steady-state or transient behavior. They model various materials with temperature dependent isotropic and orthotropic thermal and other physical properties, including phase change.

7.1.5.2 These general-purpose codes treat constant or time-dependent spatially-distributed heat-generation sources, enclosure radiation and boundary conditions including temperature and heat flux.

7.1.5.3 Most commercial FEA codes have thermal solvers and provide pre- and post-processors. The pre-processor is used to create package geometry and generate a mesh for the package, while the post-processor provides results in a graphical format. Pre- and post-processors are often in the form of a graphical user interface (GUI) which allows the user to enter data and retrieve results through a number of menu driven choices. Some older codes require entry of data in the form of an input file, without the benefit of a GUI, and rely on a third-party graphics program to plot results of an analysis. Some heat transfer codes require the use of a separate code to determine radiation form factors, which are then used by the thermal code to treat enclosure radiation. The results of the thermal analysis are often used by the structural analyst to perform thermal or pressure-induced stress analyses.

7.1.5.4 Thermal codes shall be qualified for package evaluation by verification, benchmarking, or validation. A code is verified by comparison of the results with the results of appropriate closed form solutions.

7.1.5.5 *Sample Problem Manual for Benchmarking of Cask Analysis Codes* (Glass, et al, 1988) describes a series of problems, which have been defined to evaluate structural and thermal codes. These problems were developed to simulate the hypothetical accident conditions given in the regulations while retaining simple geometries. The intent of the manual is to provide code users with a set of structural and thermal problems and solutions which are used to evaluate individual codes.

7.1.5.6 A code is benchmarked by comparison of the results with the results of other qualified codes. An alternative code validation method is to compare the code results to results from package design-based test data or hand calculations performed under qualified QA programs.

7.1.5.7 Any code selected to perform the thermal design analysis of a radioactive material transportation package shall be subject to the QA program requirements for nuclear facilities as prescribed in ASME NQA-1 or software requirements of ISO 9000 as required by the certifying authority.

7.1.5.8 Several thermal analysis codes are available to licensees of radioactive packages to perform the qualification analyses. This document is not intended to describe the various

AVA Documents
Document Sharing Hub

Full document details: ASTM E2230-22

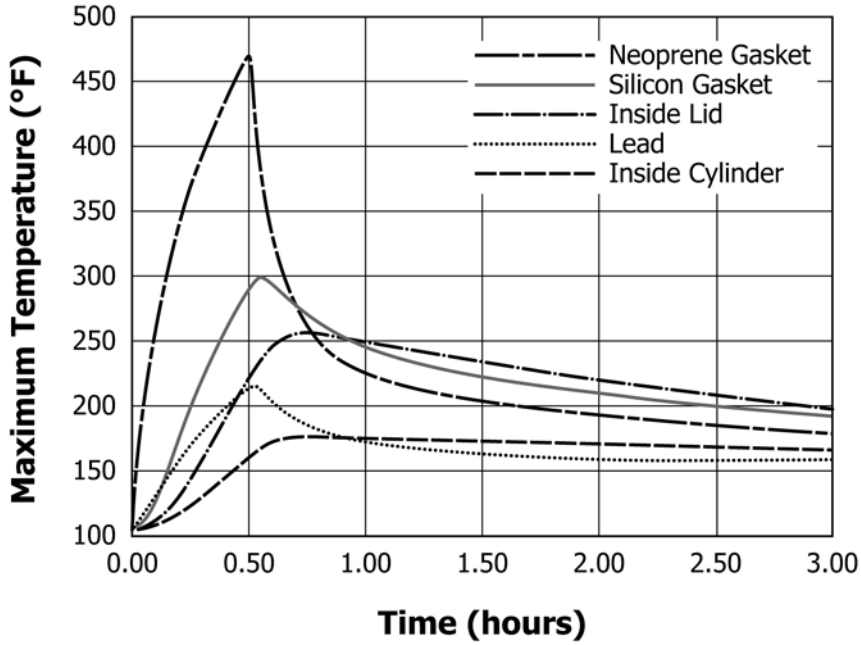

FIG. 5 Example for Temperature as a Function of Time for Selected Locations on a Sample Container During a Hypothetical Thermal Accident

thermal codes in detail, but a few are mentioned and briefly described in Appendix X4 for the reader's benefit. Codes not mentioned in Appendix X4 are often equally adequate to perform thermal qualification of packages to regulatory requirements. No comparison or evaluation of codes is provided in this document.

7.2 *Pool Fire Testing*

7.2.1 *Benefits, Limitations:*

7.2.1.1 Pool fire testing has been the traditional testing method by which a package is qualified to the thermal accident environment set forth in the regulations. In the test, the prototype package is placed 1 m over a pool of fuel whose lateral dimensions relative to the package meet the requirements stated in the regulation. When atmospheric conditions are quiescent, the fuel is ignited and the package is engulfed in the fire plume. After 30 min, the fuel is consumed, the fire goes out, and the prototype package is left to cool down naturally.

7.2.1.2 A convenient method for forming a pool consists of floating a layer of jet fuel (JP-8) on water in a deep steel tub (see Fig. 6). The water provides a flat surface for the fuel, which ensures the fire burns out evenly over the whole pool area when the fuel is completely consumed. A deep tub (~0.7 m) provides enough water to maintain a constant fuel substrate temperature which helps to maintain a constant fuel consumption rate during the fire. The packages are held at the required height above the pool surface with a stainless steel grill. Structures are placed throughout the pool to support fire instrumentation that might include thermocouples, calorimeters, heat flux gages, and gas velocity probes. The response of this instrumentation is used to provide evidence that the required thermal environment has been met. Sheet metal side ramps on the outside of the tub, and sheet metal skirts on the grill provide fire plume stability. These are necessary because the fuel vapor immediately above the fuel surface is heavier than air, and subject to displacement by very low velocity air currents. The effect of wind is minimized by enclosing the pool within a ring of 6 m high wind fencing.

7.2.1.3 The intention of a pool fire test is to subject the prototype package to an environment that is representative of conditions found in a transportation accident fire. Note that two different environments are under consideration here. There is a hypothetical accident condition or regulatory hydrocarbon fire environment, described in the regulations, and an actual pool fire environment, which is created at 1 m above a pool of burning liquid hydrocarbon fuel in calm wind conditions. Packages that are designed to withstand the regulatory hydrocarbon fire are considered to function safely in a transportation accident. The actual pool fire environment is a convenient means for testing packages and is usually very different from the hypothetical accident conditions as discussed below.

7.2.1.4 The hypothetical accident condition environment specified in the regulations is usually reduced to a schedule of heat flux absorbed through the package surface as a function of the package surface temperature. A heat balance at any instant in time on the surface of a package subjected to the regulatory hydrocarbon fire gives:

$$q_{absorbed} = 0.9 \cdot 0.8 \cdot \sigma \cdot T^4_{environment} - 0.8 \cdot \sigma \cdot T^4_{surface} \quad (1)$$

where:

$q_{absorbed}$ = heat flux passing through the surface of the package, kW/m^2,

σ = Stefan-Boltzmann constant, 5.67×10^{-11} kW/(m^2 K^4),

$T_{environment}$ = temperature specified in 10CFR71, 800 + 273 = 1073 K,

$T_{surface}$ = surface temperature of the package at any instant, K,

0.9 = specified emissivity of flames, and

AVA Documents
Document Sharing Hub

Full document details: ASTM E2230-22

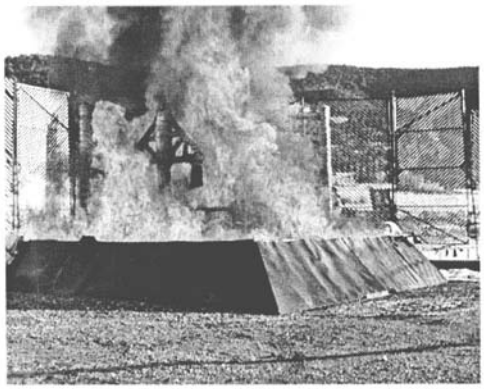

a) 6 x 6 m square tub with side ramps

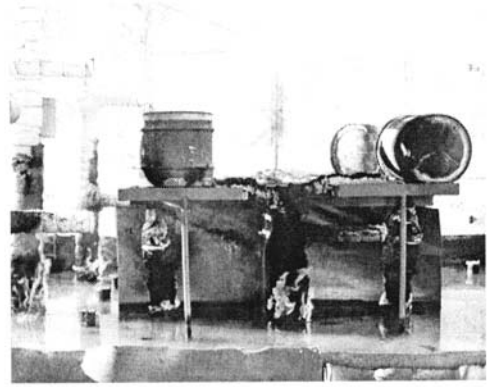

b) 1 m high grill to support packages

c) 6 m high ring of wind fences

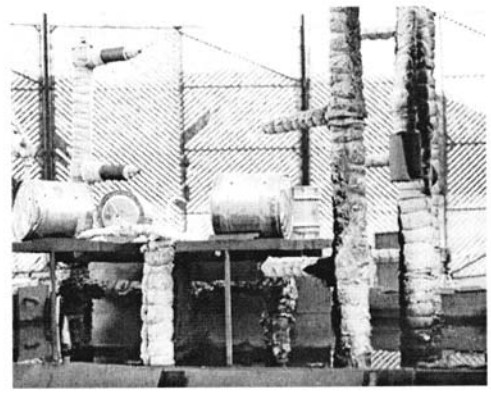

d) Fire instrumentation supported on towers

NOTE 1—Some features are to meet geometrical requirements, some stabilize the plume, and others provide evidence of supplying the required environment.

FIG. 6 A Pool Fire Test and Setup That Meets the Regulatory Requirements

0.8 = absorptivity of package surface (minimum value).

7.2.1.5 This description of the hypothetical accident condition environment is shown in Fig. 7. Note that in the equation above, the "text book" definition of flame emissivity (see 6.3) has been used to generate the plot. The regulatory heat fluxes are compared to a description of the actual pool fire environment that has been determined from the response of thick wall passive calorimeters from which data have been gathered over the last 20 years in pool fires of sizes ranging from 1 to 20 m in diameter. The wide range is due to minor variations in wind conditions and calorimeter surface orientation with respect to the pool geometry.

7.2.1.6 Note that in general, the pool fire provides an environment that is more intense than that of the regulatory accident environment. Because of this, there are both benefits and limitations to using pool fires for package qualification.

7.2.1.7 The main benefit of use of a pool fire is that it is a convenient means of providing an acceptable testing environment with a relatively minimal investment in equipment. The basic set up requires some source of fuel such as a rented tanker truck, a large open flat area, and some disposable metal support structures. In terms of flexibility and cost, there are obvious benefits over those associated with an oven or radiant heat facility.

7.2.1.8 A second benefit is that the pool fire environment often surpasses the requirements, providing a conservative test. Fig. 7 shows that the flux from a pool fire to an engulfed object often exceeds the criteria by a factor approaching four. Furthermore, the fact that the environment is a real fire shall not be overlooked. The so-called second order characteristics, such as fire plume chemistry or non-uniform spatial and temporal heat fluxes, affect package performance in unforeseen ways; and subjecting a prototype package to a pool fire brings out deficiencies due to features that weren't considered in the design. Examples of this that have occurred in the past with packages in pool fires include unexpected seal response due to uneven heating, and unexpected material response (outgassing, phase change, and decomposition) due to temperatures well above the 800°C (1475°F) design criteria.

7.2.1.9 The main limitation is that the test represents a high programmatic risk because the test is destructive and only marginally under control. Once the test is initiated, there is no stopping and no readjustments are possible. One wait until the

Documents
Document Sharing Hub

Full document details: ASTM E2230-22

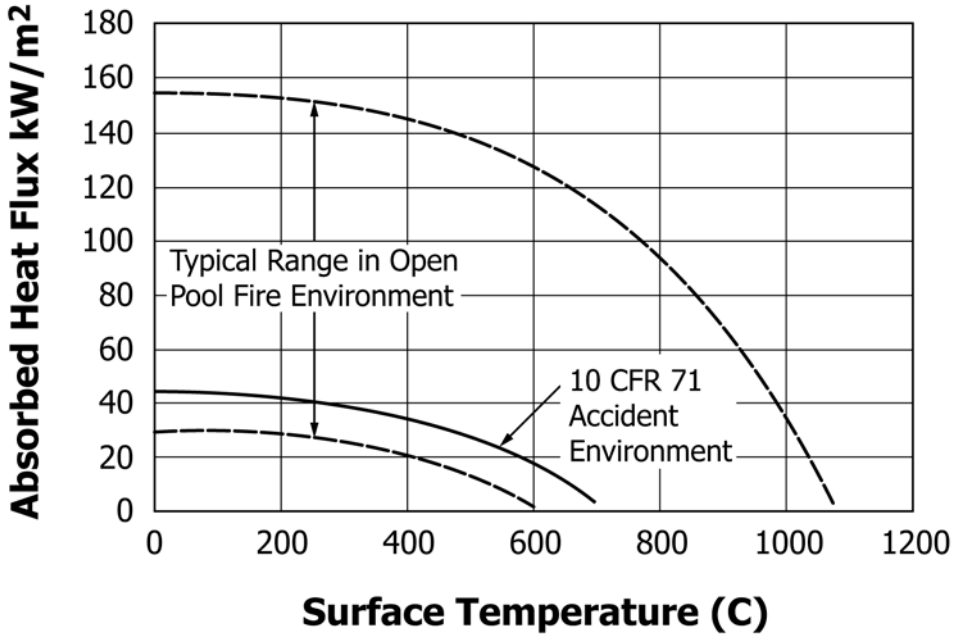

FIG. 7 Comparison of the Hypothetical Accident Fire Environment and the Actual Pool Fire Environment

fire is over and then reconciles the available physical evidence to show that the fire environment met or surpassed the minimum requirements as set forth in the regulations. There are four possible outcomes of this post-test harmonizing activity as shown in Table 1.

7.2.1.10 The inconclusive results from the High-Fail combination in Table 1 are due to the pool fire environment being overly conservative. The inconclusive results for the Low-Pass combination are due the possibility of the fire environment not meeting the criteria. In either case, the test has to be re-done, which requires repeating the entire package testing sequence leading up to the fire as well.

7.2.2 *Test Preparation:*

7.2.2.1 Except for the basic 1 m height, every pool fire test setup is different. However, the basic simplicity of the hardware allows a great deal of flexibility. A pool, some support structure, and a supply of fuel are the basic items needed. The basic features of a pool fire test setup along with some additional comments are listed in Table 2.

7.2.2.2 Features that aid in ensuring conformance to the regulations are shown in Tables 3 and 4. Of particular note in the table is the use of wind fences to mitigate the effect of wind. Several testing organizations have successfully used this approach, however, no written documentation has been found on the design. The effect of placing a 30 m diameter ring of wind fences around a pool setup is shown in Fig. 8. The wind fences were constructed of 6 m high chain link fencing fitted with aluminum slats that provided 50 % blockage.

7.2.2.3 A fire is neutrally stable with the pool flush to the ground. The fuel vapor just above the burning fuel surface is heavier than air and has little upward momentum, and thus, is subject to lateral dislocation from minor air currents. Putting the pool surface above ground level mitigates this situation. Also, the placement of lateral dams or "flame guides" on the support stand just under the package helps to contain the vapor above the pool.

TABLE 1 Four Possible Outcomes of a Pool Fire Test

Package Response to Fire	Fire Environment with Respect to 10CFR 71	
	Low Heat Flux	High Heat Flux
Pass	Inconclusive	Conclusive
Fail	Conclusive	Inconclusive

7.2.3 *Test Performance:*

7.2.3.1 The major consideration in performing the test is the effect of wind on the results. Wind, even at low speed exercises a major change in the fire environment in the lower regions of a pool fire where the test article is located. The concept of a leaning fire plume as a result of wind does not apply at 1 m above the pool surface. Instead, the fuel vapor directly above the fuel surface is pushed in the down wind direction causing the fire plume to relocate out from under the package. This phenomena occurs at very low wind speeds, therefore it is absolutely essential that the wind behavior at the test site be predictable and well understood.

7.2.3.2 An example of predictable wind behavior is shown in Fig. 9. This data (wind speed and direction) was taken at a test site located in the floor of a mountain canyon over a 5 day period. In that location, cold air drains down canyon during the night hours and heated air rises up canyon during daylight hours. The change in local direction occurs twice daily (once after sunup and once after sundown) accompanied by a lull in wind speed. Wide area weather patterns disrupt this behavior which is the cause of deviations in the Fig. 9. Note that the best time for finding low wind conditions at this site is during the early morning hours.

7.2.3.3 Once the time window is selected the concern becomes choosing the appropriate time. The wind speed and direction on a particular single day is shown in Fig. 10. The challenge is to set up the test between first light and the time the wind changes direction and perform the burn before the

AVA Documents
Document Sharing Hub

Full document details: ASTM E2230-22

TABLE 2 Common Features of Any Pool Fire Test Setup

Pool	Diameter limits set by 10CFR71 Depth—150 mm for fuel; 150 mm for water minimum—more is better Free Board—2 in.
Package Support Structure	Inconel material recommended—design for 10 000 psi strength Thermal expansion major consideration; use loose fitting slip joints; let gravity hold things together
Fuel Supply	On site tanks are major environmental and safety liabilities; consider truck tankers

TABLE 3 Features for Demonstrating Conformance to Regulations

Thermocouple Instrumentation	Recommend use of metal sheathed mineral filled type K thermocouples Use sufficient length to run all the way to data acquisition system; patches in mid-fire are problematical Thermal shunting is problem; avoid cold-hot-cold in routing Worst hot zone is at pool edge; use tea pot spigot for exiting pool Second worst hot zone is at exit of instrumentation access hole in packages filled with combustible shock mitigation material
Heat Flux	Recommend thick wall passive calorimeters for heat flux estimation
Wind	Propeller anemometer at 10 m height located away from the fire
Visual	Remote video cameras with at least 2 views with sound

TABLE 4 Additional Features for Ensuring Conformance to Regulations

Time	Consider adding fuel to pool during burn; sight glass and controllable fuel valve required
Calm Wind Conditions	Consider the use of wind fences; demonstrated reduction in wind by factor of 2
Package Engulfed in Flames	Fire is neutrally stable with pool flush to ground, put above the ground level Incorporate “Flame Guides” on support stand legs

speed begins to rise. Accomplishing this requires a well thought out procedure and practice. For this reason, a full dress rehearsal (including lighting the fire) is highly recommended.

7.2.3.4 An example of a completed procedure where two shipping containers were subjected to a pool fire test under 10 CFR 71 regulations is provided in Appendix X2. The activities began several days before the actual fire, because the test units were pre-conditioned to a desired initial temperature. This was accomplished by heating the test units in place over the pool with barrel heaters.

7.2.3.5 Through reading the procedure provided as an example in Appendix X2, note that test materials were gathered, equipment checked out, and the pre-conditioning begun. On the day before the test, a general announcement of the intention to test was made to interested parties. On the day of the test, the test personnel were brought in at first light and wind conditions began to be monitored. When it was apparent that the wind was going to follow the predicted pattern, preparations for conducting the test started. This involved removing the barrel heaters from the test units and fueling the pool. The pool was filled with only enough fuel to burn approximately half the required time. The fuel consumption was monitored, and a linear fuel level recession rate was established on a level versus time plot. The slope of the plot was transferred to intersect desired ending time (see Fig. 11).

7.2.3.6 The response of three thermocouples located on a tower near one of the test units is shown in Fig. 12. Two thermocouples that bracketed the test unit (in height above the pool) registered temperatures in excess of 1000 °C.

7.2.3.7 The response of thermocouples attached to the surface of one of the test units is shown in Fig. 13. The surface temperatures show that the package was essentially in thermal equilibrium with the fire. The temperature levels were well above the 10CFR71 requirement of 800 °C (1475 °F) and is strong evidence that the fire environment surpassed the requirement.

7.2.3.8 The response of other instrumentation in the fire also confirms that the thermal environment was more intense than that required. The time-temperature history of a thick wall passive calorimeter is shown in Fig. 14. The calorimeter was constructed of thick wall SS304 pipe and was oriented horizontally in the fire at the same level as the test units. The direct observation is that the calorimeter attained temperatures higher than the required 800 °C. The time-temperature curves are analyzed with the use of an inverse heat transfer technique that allows the determination of heat flux absorbed through the surface as a function of temperature. Although not shown here, the resulting curve clearly surpasses the required by more than a factor of two for all surfaces on the calorimeter.

7.3 *Furnace Testing*

7.3.1 *Benefits, Limitations:*

7.3.1.1 The requirements for Hypothetical Accident Conditions (HAC) thermal testing of Type B shipping packages, as defined in the current version of 10 CFR 71.73 (c)(4), have been written specifically for the use of a pool-fire test method. However, this paragraph also allows for the use of “.... any other thermal test that provides the equivalent data as an input

AVA Documents
Document Sharing Hub

Full document details: ASTM E2230-22