This international standard was developed in accordance with internationally recognized principles on standardization established in the Decision on Principles for the Development of International Standards, Guides and Recommendations issued by the World Trade Organization Technical Barriers to Trade (TBT) Committee.

Designation: E23 – 24

An American National Standard

Standard Test Methods for Notched Bar Impact Testing of Metallic Materials[1]

This standard is issued under the fixed designation E23; the number immediately following the designation indicates the year of original adoption or, in the case of revision, the year of last revision. A number in parentheses indicates the year of last reapproval. A superscript epsilon (ε) indicates an editorial change since the last revision or reapproval.

This standard has been approved for use by agencies of the U.S. Department of Defense.

1. Scope*

1.1 These test methods describe notched-bar impact testing of metallic materials by the Charpy (simple-beam) test and the Izod (cantilever-beam) test. They give the requirements for: test specimens, test procedures, test reports, test machines (see Annex A1) verifying Charpy impact machines (see Annex A2), optional test specimen configurations (see Annex A3), designation of test specimen orientation (see Terminology E1823), and determining the shear fracture appearance (see Annex A4). In addition, information is provided on the significance of notched-bar impact testing (see Appendix X1), and methods of measuring the center of strike (see Appendix X2).

1.2 These test methods do not address the problems associated with impact testing at temperatures below –196 °C (77 K).

1.3 The values stated in SI units are to be regarded as standard. No other units of measurement are included in this standard.

1.3.1 *Exception*—Section 9 and Annex A4 provide inch-pound units for information only.

1.4 *This standard does not purport to address all of the safety concerns, if any, associated with its use. It is the responsibility of the user of this standard to establish appropriate safety, health, and environmental practices and determine the applicability of regulatory limitations prior to use.* Specific precautionary statements are given in Section 6.

1.5 *This international standard was developed in accordance with internationally recognized principles on standardization established in the Decision on Principles for the Development of International Standards, Guides and Recommendations issued by the World Trade Organization Technical Barriers to Trade (TBT) Committee.*

2. Referenced Documents

2.1 *ASTM Standards:*[2]

B925 Practices for Production and Preparation of Powder Metallurgy (PM) Test Specimens

E6 Terminology Relating to Methods of Mechanical Testing

E29 Practice for Using Significant Digits in Test Data to Determine Conformance with Specifications

E177 Practice for Use of the Terms Precision and Bias in ASTM Test Methods

E691 Practice for Conducting an Interlaboratory Study to Determine the Precision of a Test Method

E1823 Terminology Relating to Fatigue and Fracture Testing

E2298 Test Method for Instrumented Impact Testing of Metallic Materials

3. Terminology

3.1 *Definitions of Terms Common to Mechanical Testing from Terminology E6:*

3.1.1 *absorbed energy,* [FL], *n*—work spent to fracture a specimen in a single pendulum swing, as measured by a compensated indicating device.

3.1.2 *drop height, h,* [L], *n*—the center of strike vertical distance between the free-hanging position and the latched position.

3.2 *Definitions of Terms Specific to This Standard:*

3.2.1 *direct verification, n*—process that ensures all parts that may affect measured absorbed energy are within specified dimensional tolerances.

3.2.2 *free-hanging position, n*—position of the pendulum after oscillation stops such that the potential and kinetic energy is zero.

[1] These test methods are under the jurisdiction of ASTM Committee E28 on Mechanical Testing and are the direct responsibility of Subcommittee E28.07 on Impact Testing.

Current edition approved April 1, 2024. Published May 2024. Originally approved in 1933. Last previous edition approved 2023 as E23 – 23a. DOI: 10.1520/E0023-24.

[2] For referenced ASTM standards, visit the ASTM website, www.astm.org, or contact ASTM Customer Service at service@astm.org. For *Annual Book of ASTM Standards* volume information, refer to the standard's Document Summary page on the ASTM website.

*A Summary of Changes section appears at the end of this standard

Copyright © ASTM International, 100 Barr Harbor Drive, PO Box C700, West Conshohocken, PA 19428-2959. United States

Documents
Document Sharing Hub

Full document details: ASTM E23-24

3.2.3 *free swing, n*—uninterrupted (without a test specimen) pendulum swing from the latched position as recorded by the indicating device (see A2.3.8.1).

3.2.4 *indirect verification, n*—process that ensures the average absorbed energy from testing a set of verification specimens corresponds to the certified absorbed energy within a specified tolerance (see A2.4.1).

3.2.5 *latched position, n*—position of the pendulum on the release mechanism prior to being released to perform a test.

3.2.6 *lateral expansion* [L], *n*—the maximum increase in the thickness of the specimen as a result of the impact test, expressed in mm.

3.2.6.1 *Discussion*—Lateral expansion is used as a measure of ductility.

3.2.7 *range capacity, n*—maximum available energy for a specific pendulum setting.

3.2.7.1 *Discussion*—On single range machines this corresponds to the machine capacity.

3.2.8 *shear fracture appearance, SFA, n*—the amount of fracture surface in the specimen that failed in a shear (stable) mode, expressed in percent.

4. Summary of Test Method

4.1 The essential features of an impact test are: a suitable specimen (specimens of several different types are recognized), a set of anvils, and specimen supports on which the test specimen is placed to receive the blow of the moving mass, a moving mass that has sufficient energy to break the specimen placed in its path, and an indicating device for measuring the absorbed energy of the broken specimen.

5. Significance and Use

5.1 These test methods of impact testing relate specifically to the behavior of metal when subjected to a single application of a force resulting in multi-axial stresses associated with a notch, coupled with high rates of loading and in some cases with high or low temperatures. For some materials and temperatures the results of impact tests on notched specimens, when correlated with service experience, have been found to predict the likelihood of brittle fracture accurately. Further information on significance appears in Appendix X1.

6. Precautions in Operation of Machine

6.1 Safety precautions should be taken to protect personnel from the swinging pendulum, flying broken specimens, and hazards associated with specimen warming and cooling media.

7. Apparatus

7.1 *General Requirements:*

7.1.1 The testing machine shall be a pendulum type of rigid construction.

7.1.2 The testing machine shall be designed and built to conform with the requirements given in Annex A1.

7.2 *Inspection and Verification:*

7.2.1 Procedures for direct verification of impact machines are provided in A2.2 and A2.3. The items listed in A2.2 require direct verification annually.

7.2.2 Procedures for indirect verification of Charpy machines, using verification specimens, are given in A2.4. Charpy impact machines require direct and indirect verification annually.

8. Test Specimens

8.1 *Configuration and Orientation:*

8.1.1 Specimens shall be taken from the material as specified by the applicable specification.

8.1.2 The specimens shown in Fig. 1 and Fig. 2 are those most widely used and most generally satisfactory. They are particularly suitable for ferrous metals, excepting cast iron.[3] The Charpy specimen designations are V-notch and U-notch.

NOTE 1—Keyhole notch specimen is similar to U-notch, except the notch width is 1.6 mm or less.

8.1.3 The specimens commonly found suitable for powder metallurgy materials is shown in Fig. 3. Powder metallurgy impact test specimens shall be produced following the procedure in Practices B925. The impact test results of these materials are affected by specimen orientation. Therefore, unless otherwise specified, the position of the specimen in the machine shall be such that the pendulum will strike a surface that is parallel to the compacting direction. For powder metallurgy materials the impact test results are reported as unnotched absorbed energy.

8.1.4 Sub-size and supplementary specimen recommendations are given in Annex A3.

8.2 *Specimen Machining:*

8.2.1 When heat-treated materials are being evaluated, the specimen shall be finish machined, including notching, after the final heat treatment, unless it can be demonstrated that the impact properties of specimens machined before heat treatment are identical to those machined after heat treatment.

8.2.2 Notches shall be smoothly machined, but polishing has proven generally unnecessary.

NOTE 2—Variations in notch dimensions will affect the results of the tests. Appendix X1.2 illustrates the effects from varying notch dimensions on V-notch specimens.

NOTE 3—In keyhole notch specimens, carefully drill the round hole with a slow feed rate. Exercise care in cutting the slot to ensure that the surface of the drilled hole opposite the slot is not damaged.

8.2.3 Identification marks shall only be placed in the following locations on specimens: either of the 10 mm square ends; the side of the specimen that faces up when the specimen is positioned in the anvils (see Note 4); or the side of the specimen opposite the notch. No markings, on any side of the specimen, shall be within 10 mm of the center line of the notch. Permanent markers, laser engraving, scribes, electrostatic pencils, and other reasonable marking methods may be used for identification purposes. However, some marking methods can result in damage to the specimens if not used correctly. For example, excessive heat from electrostatic pencils or deformation to the specimen from stamping can change the mechanical properties of the specimen. Therefore, care shall always be

[3] Report of Subcommittee XV on Impact Testing of Committee A03 on Cast Iron, Proceedings, ASTM, Vol 33 Part 1, 1933.

AVA Documents
Document Sharing Hub

Full document details: ASTM E23-24

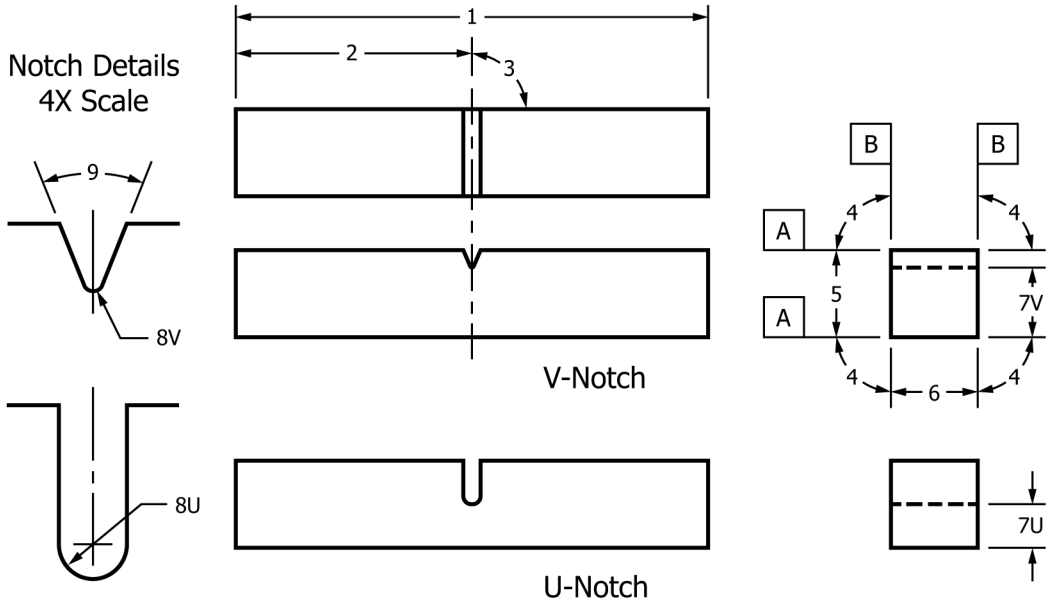

ID Number	Description	Dimension	Tolerance
1	Length of specimen	55 mm	+0/-2.5 mm
2	Centering of notch		±1 mm
3	Notch length to edge	90°	±2°
4	Adjacent sides angle	90°	±0.17°
5	Width	10 mm	±0.075 mm
6	Thickness	10 mm	±0.075 mm
7V	Ligament length, Type V	8 mm	±0.025 mm
7U	Ligament length, Type U	5 mm	±0.075 mm
8V	Radius of notch, Type V	0.25 mm	±0.025 mm
8U	Radius of notch, Type U	1 mm	±0.025 mm
9	Angle of notch	45°	±1°
A	Surface finish requirements	2 µm (Ra)	≤
B	Surface finish requirements	4 µm (Ra)	≤

FIG. 1 Charpy (Simple-Beam) Impact Test Specimens, V-Notch and U-Notch

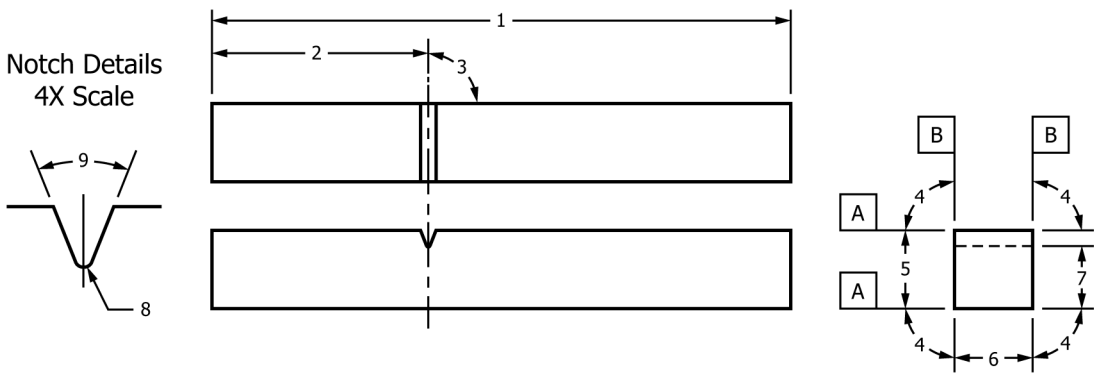

ID Number	Description	Dimension	Tolerance
1	Length of specimen	75 mm	+0/-2.5 mm
2	Notch to top	28 mm	
3	Notch length to edge	90°	±2°
4	Adjacent sides angle	90°	±0.17°
5	Width	10 mm	±0.025 mm
6	Thickness	10 mm	±0.025 mm
7	Ligament length	8 mm	±0.025 mm
8	Radius of notch	0.25 mm	±0.025 mm
9	Angle of notch	45°	±1°
A	Surface finish requirement	2 µm (Ra)	≤
B	Surface finish requirement	4 µm (Ra)	≤

FIG. 2 Izod (Cantilever-Beam) Impact Test Specimen

Documents
Document Sharing Hub

Full document details: ASTM E23-24

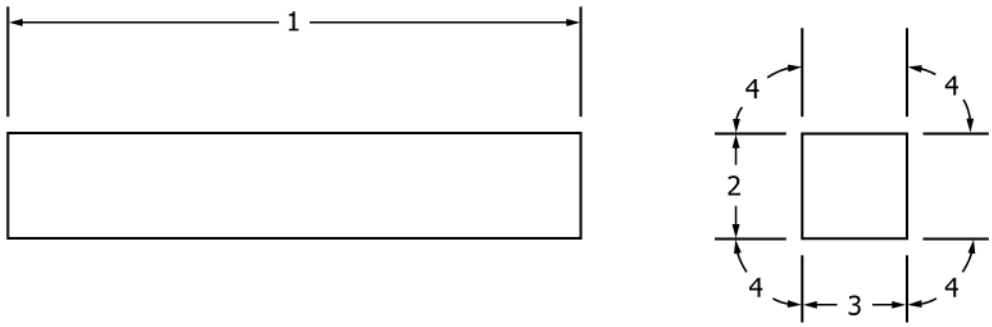

COMPACTING DIRECTION ↓
STRIKING DIRECTION →

ID Number	Description	Dimension	Tolerance
1	Length of Charpy specimen	55 mm	±1.0 mm
1	Length of Izod specimen	75 mm	±1.5 mm
2	Width	10.00 mm	±0.13 mm
3	Thickness	10.00 mm	±0.13 mm
4	Adjacent sides angle	90°	±0.17°

FIG. 3 Powder Metallurgy (PM) Unnotched Charpy and Izod Impact Test Specimens

taken to avoid damage to the specimen. Stamping and other marking processes that result in deformation of the specimen should only be used on the ends of the specimens, prior to notching.

NOTE 4—Careful consideration should be given before placing identification marks on the side of the specimen to be placed up when positioned in the anvils. If the test operator is not careful, the specimen can be placed in the machine with the identification marking resting on the specimen supports (that is, facing down). Under these circumstances, the absorbed energy value obtained may be unreliable.

8.2.4 Unless otherwise specified by product or customer specifications, standard test specimens shall conform to the dimensions and tolerances shown in Fig. 1 or any other applicable figure in this test method.

NOTE 5—The type of specimen chosen depends largely upon the characteristics of the material to be tested. Often a given specimen is not equally satisfactory for soft nonferrous metals and hardened steels; therefore, many types of specimens are recognized. In general, sharper and deeper notches are required to distinguish differences in very ductile materials or when using low testing velocities. Side-grooved specimens have been used to minimize absorbed energy variability for high-strength and ductile materials.

9. Procedure

9.1 *Preparation of the Apparatus:*

9.1.1 Perform a routine procedure for checking impact machines at the beginning of each day, each shift, or just prior to testing on a machine used intermittently. The results of these routine checks should be kept in a log book for the machine. After the testing machine has been ascertained to comply with Annex A1 and Annex A2, carry out the routine check as follows:

9.1.1.1 Visually examine the striker and anvils for obvious damage and wear.

9.1.1.2 Check the machine with a free swing. The indicating device shall indicate zero on machines reading directly in absorbed energy. On machines reading in degrees, the reading shall correspond to zero absorbed energy on the conversion formula or table furnished by the machine manufacturer. On machines that do not compensate for total frictional losses, the analog scale will not indicate zero. In this case, the indicated values, when converted to absorbed energy, shall be corrected for total frictional losses that are assumed to be proportional to the arc of the swing.

9.1.1.3 The percent friction and windage loss shall not exceed 0.4 % of the range capacity being tested and should not change by more than 10 % of the percent friction and windage loss measurements previously recorded on the machine. If the percent friction and windage loss does exceed 0.4 % or is significantly different from previous measurements, check the indicating device, the release mechanism, and the bearings for wear and damage. However, if the machine has not been used recently, let the pendulum swing for 50 to 100 cycles, and repeat the percent friction and windage loss test before undertaking repairs to the machine. To ensure that percent friction and windage loss is within allowable tolerance, use one of the following evaluation procedures:

AVA Documents
Document Sharing Hub

Full document details: ASTM E23-24

(1) For a machine equipped with an analog scale:

Raise the pendulum to the latched position;
Move the analog scale pointer to the range capacity being used;
Release the pendulum (without a specimen in the machine);
Allow the pendulum to cycle five times (a forward and a backward swing together count as one cycle);
Prior to the sixth forward swing set the analog scale pointer to between 5 % and 10 % of the range capacity being used;
After the sixth forward swing record the value indicated by the analog scale pointer (convert to absorbed energy if necessary);
Divide the energy reading by 10;
Divide by the range capacity being used, and
Multiply by 100 to get the percent friction and windage loss.

(2) A machine equipped with a digital display:
Determine the percent friction and windage loss per manufacturer's procedure.

(3) For machine equipped with both an analog scale and digital display:
Determine the percent friction and windage loss using the same indicating device used to report absorbed energy (11.1.6 and A2.4).

NOTE 6—Prior to the 2012 version, the percent friction and windage loss was based on 11 (half) swings and the analog scale pointer was not engaged on the first swing. Now the pointer is engaged on the first swing. The difference is that the friction, windage, and analog scale pointer mechanism losses associated with the first swing are no longer assumed to be zero. On the first swing the pointer should go to 0.00, so any friction and windage losses that will be recorded will only show up on the following 10 (half) swings.

9.2 *Test Temperature Considerations:*

9.2.1 The temperature of testing affects the impact properties of most materials. For materials with a body centered cubic structure, a transition in fracture mode occurs over a temperature range that depends on the chemical composition and microstructure of the material. Test temperatures may be chosen to characterize material behavior at fixed values, or over a range of temperatures to characterize the transition region, lower shelf, or upper shelf behavior, or all of these. The choice of test temperature is the responsibility of the user of this test method and will depend on the specific application. For tests performed at room temperature, the temperature should be 20 °C ± 5 °C.

9.2.2 The temperature of a specimen can change significantly during the interval it is removed from the temperature conditioning environment, transferred to the impact machine, and the fracture event is completed (see Note 9). When using a heating or cooling medium near its boiling point, use data from the references in Note 9 or calibration data with thermocouples to confirm that the specimen is within the stated temperature tolerances when the striker contacts the specimen. If excessive adiabatic heating is expected, monitor the specimen temperature near the notch during fracture.

9.2.3 Verify temperature-measuring equipment at least every six months. If liquid-in-glass thermometers are used, an initial verification shall be sufficient, however, the device shall be inspected for problems, such as the separation of liquid, at least every six months.

9.2.4 Hold the specimen at the desired temperature within ±1 °C (±2 °F) in the temperature conditioning environment. Any method of heating or cooling or transferring the specimen to the anvils may be used provided the temperature of the specimen immediately prior to fracture is essentially the same as the holding temperature (see Note 9). The maximum change in the temperature of the specimen allowed for the interval between the temperature conditioning treatment and impact is not specified here, because it is dependent on the material being tested and the application. The user of nontraditional or lesser used temperature conditioning and transfer methods (or specimen sizes) shall show that the temperature change for the specimen prior to impact is comparable to or less than the temperature change for a standard size specimen of the same material that has been thermally conditioned in a commonly used medium (oil, air, nitrogen, acetone, methanol), and transferred for impact within 5 s (see Note 9). Three temperature conditioning and transfer methods used in the past are: liquid bath thermal conditioning and transfer to the specimen supports with centering tongs; furnace thermal conditioning and robotic transfer to the specimen supports; placement of the specimen on the supports followed by in situ heating and cooling.

9.2.4.1 For liquid bath cooling or heating use a suitable container, which has a grid or another type of specimen positioning fixture. Cover the specimens, when immersed, with at least 25 mm (1 in.) of the liquid, and position so that the notch area is not closer than 25 mm to the sides or bottom of the container, and no part of the specimen is in contact with the container. Place the device used to measure the temperature of the bath in the center of a group of the specimens. Agitate the bath and hold at the desired temperature within ±1 °C (±2 °F). Thermally condition the specimens for at least 5 min before testing, unless a shorter thermal conditioning time can be shown to be valid by measurements with thermocouples. Leave the device (tongs, for example) used to handle the specimens in the bath for at least 5 min before testing, and return the device to the bath between tests.

9.2.4.2 When using a gas medium, position the specimens so that the gas circulates around them and hold the gas at the desired temperature within ±1 °C (±2 °F) for at least 30 min. Leave the device used to remove the specimen from the medium in the medium except when handling the specimens.

NOTE 7—Temperatures up to +260 °C may be obtained with certain oils, but "flash-point" temperatures should be carefully observed.

NOTE 8—For testing at temperatures down to –196 °C (77 °K), standard testing procedures have been found to be adequate for most metals.

NOTE 9—A study has shown that a specimen heated to 100 °C in water can cool 10 °C in the 5 s allowed for transfer to the specimen supports.[4] Other studies, using cooling media that are above their boiling points at room temperature have also shown large changes in specimen temperature during the transfer of specimens to the machine anvils. In addition, some materials change temperature dramatically during impact testing at cryogenic temperatures due to adiabatic heating.[5]

9.3 *Charpy Test Procedure:*

9.3.1 The Charpy test procedure may be summarized as follows: the test specimen is thermally conditioned and positioned on the specimen supports against the anvils; the pendulum is released without vibration, and the specimen is impacted

[4] Nanstad, R. K., Swain, R. L. and Berggren, R. G., "Influence of Thermal Conditioning Media on Charpy Specimen Test Temperature,"*Charpy Impact Test: Factors and Variables, ASTM STP 1072*, ASTM, 1990, pp. 195-210.

[5] Tobler R. L. Et al.," Charpy Impact Tests Near Absolute Zero," *Journal of Testing and Evaluation*, Vol 19, 1 1992.

AVA Documents
Document Sharing Hub

Full document details: ASTM E23-24

by the striker. Information is obtained from the machine and from the broken specimen.

9.3.1.1 The 8 mm striker shall be used, unless the 2 mm striker is specified.

NOTE 10—For some materials, the striker radius can significantly affect the results.

9.3.2 To position a test specimen in the machine, self-centering tongs similar to those shown in Fig. 4 should be used (see A1.10.1). The tongs illustrated in Fig. 4 are for centering V-notch specimens. If non V-notch specimens are used, modification of the tong design may be necessary. If an end-centering device is used, caution shall be taken to ensure that low-energy high-strength specimens will not rebound off this device into the pendulum and cause erroneously high recorded absorbed energy values. Many such devices are permanent fixtures of machines, and if the clearance between the end of a

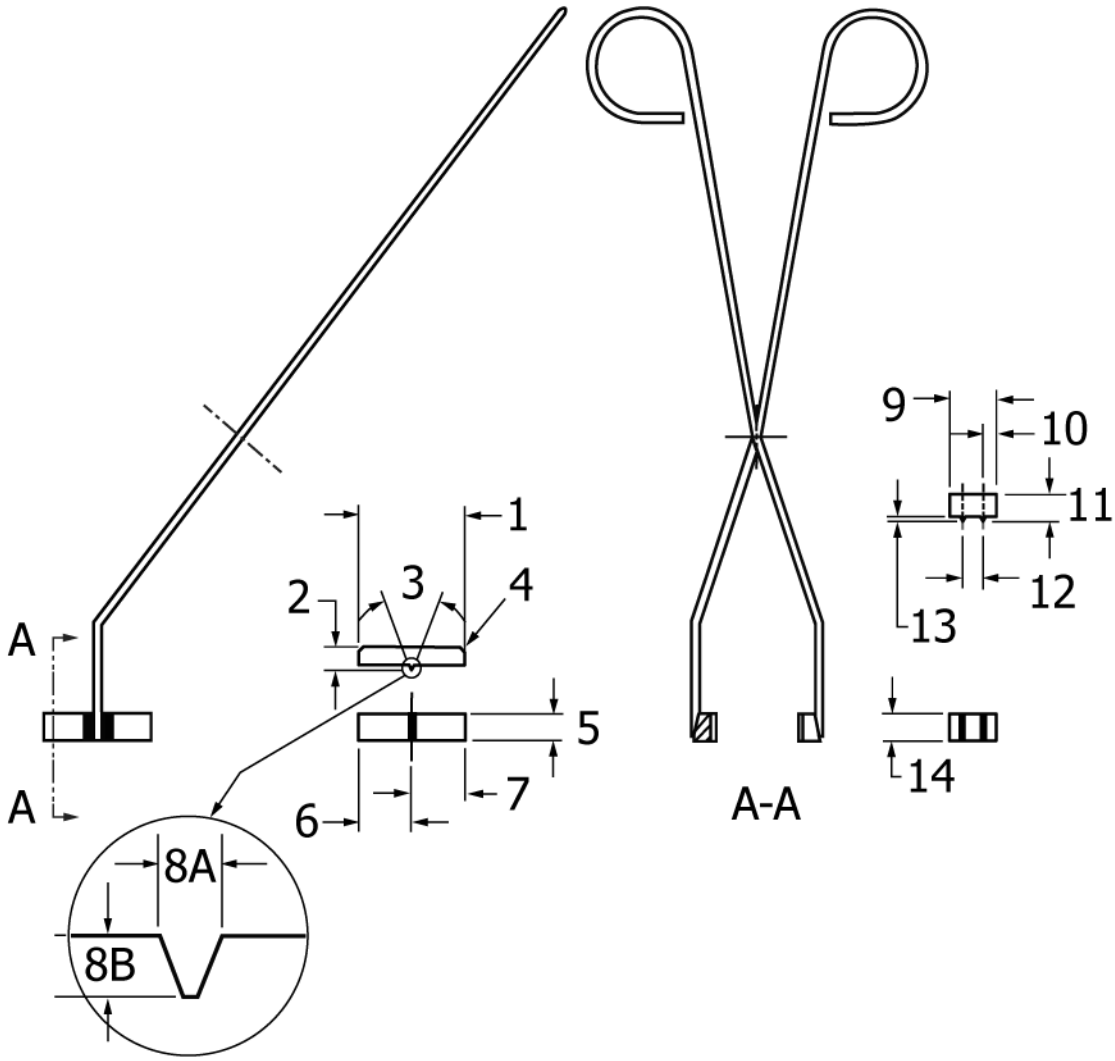

ID Number	Designation	Dimension, mm	ID Number	Designation	Dimension, mm
1	Support (notch side) length	39.93 + 0 –0.051	8B	10 mm specimen width	1.52 to 1.65
				5 mm specimen width	0.69 to 0.81
				3 mm specimen width	0.36 to 0.48
2	Support (notch side) height	7.94 ± 1	9	Solder pad length	17.46 ± 1
3	Insert angle	44.5 ± 0.5°	10	Solder pad extension	4.76 ± 1
4	Radius on support	2 ± 1	11	Solder pad height	9.5 ± 1
5	Support width	9.5 ± 1	12	rod	7.94 ± 1
6	Notch center	19.96	13		1.588 ± 1
7	Notch center	19.96	14	Solder pad width	9.5 ± 1
8A	10 mm specimen width	1.60 to 1.70			
	5 mm specimen width	0.74 to 0.80			
	3 mm specimen width	0.45 to 0.51			

FIG. 4 Centering Tongs for V-Notch Charpy Specimens

Documents
Document Sharing Hub

Full document details: ASTM E23-24

specimen in the test position and the centering device is not approximately 13 mm, the broken specimens may rebound into the pendulum.

9.3.3 To conduct the test, prepare the machine by raising the pendulum to the latched position, prepare the indicating device (set the analog scale pointer at the range capacity, or initialize the digital display, or both), position the specimen on the specimen supports against the anvils, and release the pendulum. If a liquid bath or gas medium is being used for thermal conditioning, perform the following sequence in less than 5 s (for 10 mm × 10 mm × 55 mm specimens, see 9.2.4). Remove the test specimen from its cooling (or heating) medium with centering tongs that have been temperature conditioned with the test specimen, place the specimen in the test position, and release the pendulum smoothly. If a test specimen has been removed from the temperature conditioning bath and it is questionable that the test can be conducted within the 5 s time frame, return the specimen to the bath for the time required in 9.2 before testing.

9.3.3.1 If a fractured impact specimen does not separate into two pieces, report it as unbroken (see 10.2.2 for separation instructions). Unbroken specimens with absorbed energies of less than 80 % of the range capacity may be averaged with values from broken specimens. If the absorbed energy exceeds 80 % of the range capacity and the specimen passes completely between the anvils, report the value as approximate (see Note 11) and do not average it with other values. If an unbroken specimen does not pass between the machine anvils, (for example, it stops the pendulum), the result shall be reported as exceeding the range capacity. A specimen shall never be struck more than once.

NOTE 11—Absorbed energy values above 80 % of the range capacity are inaccurate. Ideally an impact test would be conducted at a constant impact velocity. In a pendulum-type test, the velocity decreases as the fracture progresses. For specimens that have absorbed energies approaching 80 % of the range capacity, the velocity of the pendulum decreases (to about 45 % of the initial velocity) during fracture to the point that accurate absorbed energies are no longer obtained.

9.3.3.2 If a specimen jams in the machine, disregard the results and check the machine thoroughly for damage or misalignment, which would affect its direct verification, indirect verification, or both.

9.3.3.3 To prevent recording an erroneous indicated value, caused by jarring the analog scale pointer when locking the pendulum in its latched position, read the value for each test from the analog scale prior to locking the pendulum for the next test.

9.4 *Izod Test Procedure:*

9.4.1 The Izod test procedure may be summarized as follows: the test specimen is positioned in the specimen-holding fixture and the pendulum is released without vibration. Information is obtained from the machine and from the broken specimen. The details are described as follows:

9.4.2 Testing at temperatures other than room temperature is difficult because the specimen-holding fixture for Izod specimens is often part of the base of the machine and cannot be readily cooled (or heated). Consequently, Izod testing should be performed at room temperature.

9.4.3 Clamp the specimen firmly in the support vise so that the centerline of the notch is in the plane of the top of the vise within 0.125 mm. Prepare the indicating device (set the analog scale pointer at the range capacity or initialize the digital display, or both) and release the pendulum smoothly. Sections 9.3.3.1 – 9.3.3.3, also apply when testing Izod specimens.

10. Information Obtainable from Impact Tests

10.1 *The absorbed energy* shall be taken as the difference between the energy in the striking member at the instant of impact with the specimen and the energy remaining after breaking the specimen. This absorbed energy value is determined by the indicating device which has been corrected for total frictional losses.

10.2 *Lateral expansion measurement* methods shall take into account the fact that the fracture path seldom bisects the point of maximum expansion on both sides of a specimen. One half of a broken specimen may include the maximum expansion for both sides, one side only, or neither. Therefore, the expansion on each side of each specimen half shall be measured relative to the plane defined by the undeformed portion on the side of the specimen, as shown in Fig. 5. For example, if A_1 is greater than A_2, and A_3 is less than A_4, then the lateral expansion is the sum of $A_1 + A_4$.

10.2.1 Before making any lateral expansion measurements, it is essential that the two specimen halves are visually examined for burrs that may have formed during impact testing; if the burrs will influence the lateral expansion measurements, they shall be removed (by rubbing on emery cloth or any other suitable method), making sure that the protrusions to be measured are not rubbed during the removal of the burr. Then, examine each fracture surface to ascertain that the protrusions have not been damaged by contacting an anvil, a machine mounting surface, etc. Lateral expansion shall not be measured on a specimen with this type of damage.

10.2.2 Lateral expansion measurements shall be reported as follows. An unbroken specimen can be reported as broken if the specimen can be separated by pushing the hinged halves together once and then pulling them apart without further fatiguing the specimen, and the lateral expansion measured for the unbroken specimen (prior to bending) is equal to or greater than that measured for the separated halves. In the case where a specimen cannot be separated into two halves, the lateral expansion can be measured as long as the shear lips can be accessed without interference from the hinged ligament that has been deformed during testing. The specimen shall be reported as unbroken.

10.2.3 Lateral expansion may be measured easily by using a gauge like the one shown in Fig. 6 (assembly and details shown in Fig. 7). Using this type of gauge the measurement is made with the following procedure: orient the specimen halves so that the compression sides are facing each other, take one half of the fractured specimen and press it against the anvil and indicator plunger and record the reading, make a similar measurement on the other half (same side) of the fractured specimen and disregard the lower of the two values, do the same for the other side of the fractured specimen, report the

AVA Documents
Document Sharing Hub

Full document details: ASTM E23-24

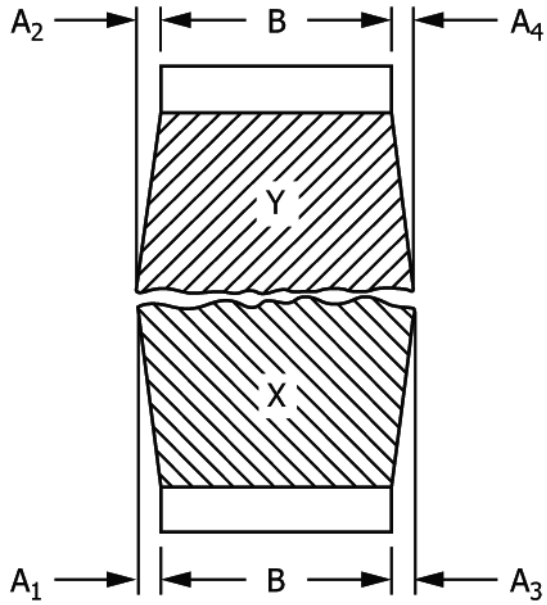

FIG. 5 Halves of Broken Charpy V-Notch Impact Specimen Illustrating the Measurement of Lateral Expansion, Dimensions A_1, A_2, A_3, A_4 and Original Thickness, Dimension B

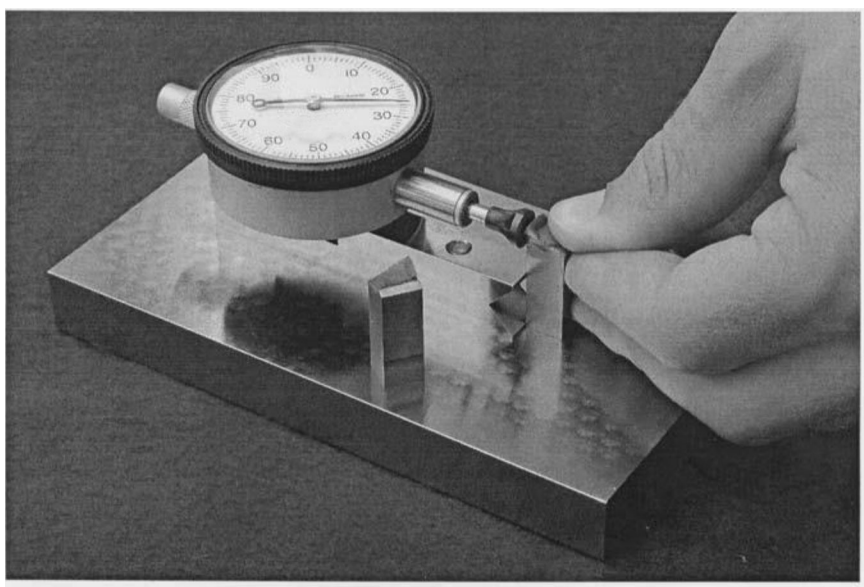

FIG. 6 Lateral Expansion Gauge for Charpy Impact Specimens

sum of the maximum expansions for the 2 sides as the lateral expansion for the specimen.

10.3 *The shear fracture appearance* may be determined using a variety of methods. The approach and the acceptable methods are defined in Annex A4. For each method, the user shall distinguish between regions formed by stable crack growth mechanisms, and regions formed by unstable crack growth mechanisms. For purposes of this Test Method, the "shear area" consists of those portions of the fracture surface that form by stable crack growth (Fracture Initiation Region, Shear Lips, and Final Fracture Region), as shown in Fig. 8.

The shear fracture appearance is typically calculated as the difference between the total fractured area (Fracture Initiation Region, Shear Lips, Unstable Fracture Region, and Final Fracture Region) and the area of unstable fracture region, divided by the total fractured area, times 100. The measurement methods described in Annex A4 provide estimates for the area of the unstable fracture region (directly or indirectly), but do not consider details of the fracture mode for the unstable region. The unstable fracture region could be 100 % cleavage, a mixture of cleavage and ductile-dimple fracture morphologies, a mixture of intergranular and ductile-dimple fracture morphologies, or a mixture of other fracture morphologies.

NOTE 12—Carbon steels often exhibit a classic cleavage region that identifies the unstable fracture region with a well-defined area of shiny fracture that is easy to recognize and measure. Other steels, such as quenched and tempered SAE 4340 alloys [illegible] unstable

AVA Documents
Document Sharing Hub

Full document details: ASTM E23-24

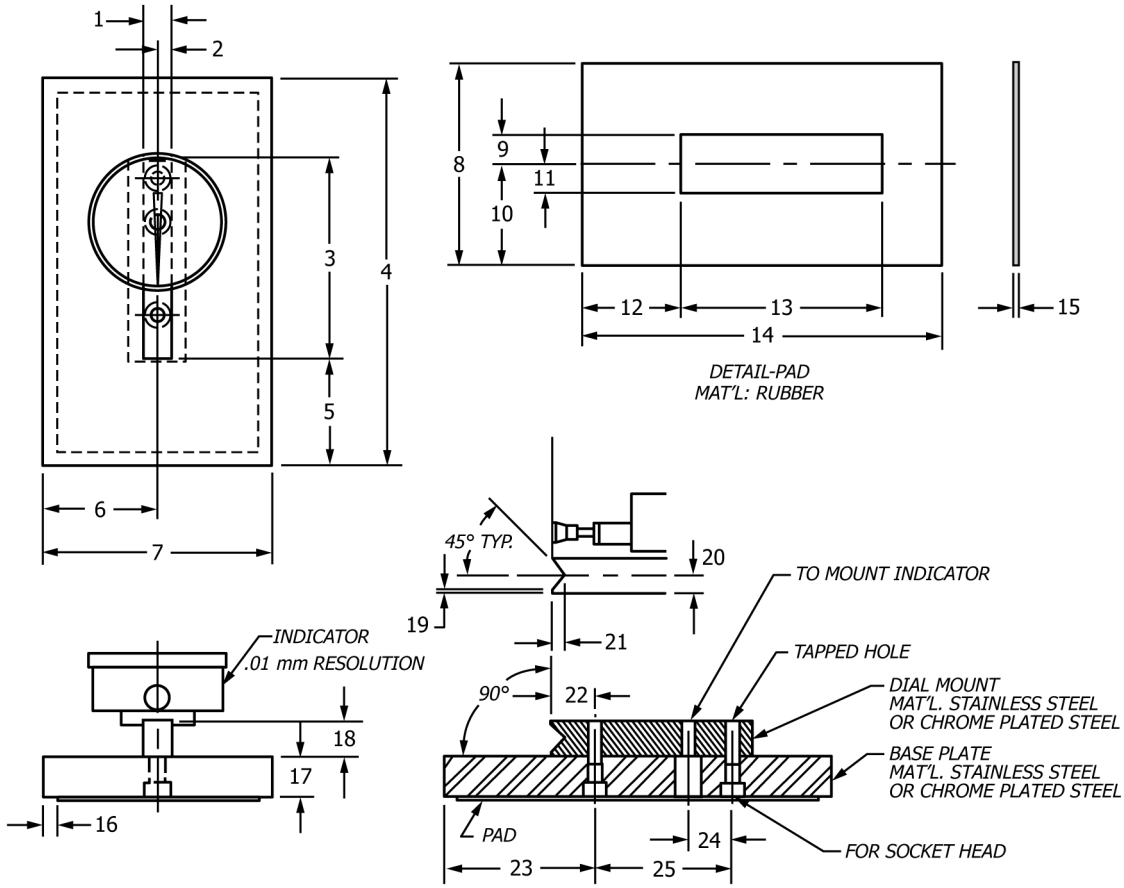

ID Number	Dimension, mm	ID Number	Dimension, mm
1	12.7	15	1.6
2	6.4	16	6.4
3	88.9	17	17.5
4	171.5	18	15.9
5	47.6	19	1.7
6	50.8	20	8.3
7	101.6	21	6.1
8	88.9	22	19.1
9	12.7	23	66.7
10	44.5	24	19.1
11	12.7	25	60.3
12	43.2		
13	88.9		
14	158.8		

FIG. 7 Assembly and Details for Lateral Expansion Gauge

fracture that consists of an intimate mixture of cleavage facets and ductile dimples (only apparent at high magnifications). Some embrittled steels can exhibit partially intergranular fracture, as well. In these cases the area of unstable fracture may not be as easy to identify.

11. Test Report and Test Records

11.1 The test report shall include the following information (for each specimen tested):

11.1.1 Conformance to Test Method E23-YR (where YR is edition year),

11.1.2 Specimen type, per Fig. 1 or any other applicable figure in this test method. Any deviations shall be reported.

11.1.3 Specimen size (if sub-size specimen),

11.1.4 Test temperature (if room temperature, report actual temperature),

11.1.5 For Charpy testing specify the striker radius as 8 mm or 2 mm,

11.1.6 Absorbed energy,

11.1.7 Unbroken specimens and whether or not they were used in the average

11.1.8 Any specimens for which the absorbed energy exceeds 80% of the range capacity, report the value as approximate or exceeding the range capacity (see 9.3.3.1), and

11.1.9 Any other contractual requirements.

Documents
Document Sharing Hub

Full document details: ASTM E23-24