NOTICE: This standard has either been superseded and replaced by a new version or withdrawn.
Contact ASTM International (www.astm.org) for the latest information

Designation: E2446 – 05(Reapproved 2010)

Standard Practice for Classification of Computed Radiology Systems[1]

This standard is issued under the fixed designation E2446; the number immediately following the designation indicates the year of original adoption or, in the case of revision, the year of last revision. A number in parentheses indicates the year of last reapproval. A superscript epsilon (ε) indicates an editorial change since the last revision or reapproval.

1. Scope

1.1 This practice describes the evaluation and classification of a computed radiography (CR) system, a particular phosphor imaging plate (IP), system scanner and software, in combination with specified metal screens for industrial radiography. It is intended to ensure that the evaluation of image quality, as far as this is influenced by the scanner/IP system, meets the needs of users.

1.2 The practice defines system tests to be used to classify the systems of different suppliers and make them comparable for users.

1.3 The CR system performance is described by signal and noise parameters. For film systems, the signal is represented by gradient and the noise by granularity. The signal-to-noise ratio is normalized by the basic spatial resolution of the system and is part of classification. The normalization is given by the scanning aperture of 100 µm diameter for the microphotometer, which is defined in Test Method E1815 for film system classification. This practice describes how the parameters shall be measured for CR systems.

1.4 The values stated in SI are to be regarded as the standard.

1.5 *This standard does not purport to address all of the safety concerns, if any, associated with its use. It is the responsibility of the user of this standard to establish appropriate safety and health practices and to determine the applicability of regulatory limitations prior to use.*

2. Referenced Documents

2.1 *ASTM Standards:*[2]

E1316 Terminology for Nondestructive Examinations

E1815 Test Method for Classification of Film Systems for Industrial Radiography

E2002 Practice for Determining Total Image Unsharpness in Radiology

E2007 Guide for Computed Radiography

E2033 Practice for Computed Radiology (Photostimulable Luminescence Method)

E2445 Practice for Performance Evaluation and Long-Term Stability of Computed Radiography Systems

3. Terminology

3.1 *Definitions*—The definition of terms relating to gamma- and X-radiology, which appear in Terminology E1316, Guide E2007, and Practice E2033, shall apply to the terms used in this practice.

3.2 *Definitions of Terms Specific to This Standard:*

3.2.1 *computed radiology system (CR system)*—A complete system of a storage phosphor imaging plate (IP), a corresponding read out unit (scanner or reader) and software, which converts the information of the IP into a digital image (see also Guide E2007).

3.2.2 *computed radiology system class*—A particular group of storage phosphor imaging plate systems, which is characterized by a SNR (signal-to-noise ratio) range shown in Table 1 and by a certain unsharpness range in a specified exposure range.

3.2.3 *ISO speed S_{IPx}*—Defines the speed of a CR system and is calculated from the reciprocal dose value, measured in gray, which is necessary to obtain a specified minimum SNR of a CR system.

3.2.4 *signal-to-noise ratio (SNR)*—Quotient of mean value of the linearized signal intensity and standard deviation of the noise (intensity distribution) at this signal intensity. The SNR depends on the radiation dose and the CR system properties.

3.2.5 *modulation transfer function (MTF)*—The normalized magnitude of the Fourier-transform (FT) of the differentiated edge spread function (ESF) of the linearized PSL (photo stimulated luminescence) intensity, measured perpendicular to a sharp edge. MTF describes the contrast transmission as a function of the object size. In this practice, the MTF characterizes the unsharpness of the CR system. This depends on the scanning system itself and IP-type and cassette employed.

3.2.6 *gain/amplification*—Opto-electrical gain setting of the scanning system.

[1] This practice is under the jurisdiction of ASTM Committee E07 on Nondestructive Testing and is the direct responsibility of Subcommittee E07.01 on Radiology (X and Gamma) Method.

Current edition approved June 1, 2010. Published August 2010 Originally approved in 2005. Last previous edition approved in 2005 as E2446 – 05. DOI: 10.1520/E2446-05R10.

[2] For referenced ASTM standards, visit the ASTM website, www.astm.org, or contact ASTM Customer Service at service@astm.org. For *Annual Book of ASTM Standards* volume information, refer to the standard's Document Summary page on the ASTM website.

Copyright © ASTM International, 100 Barr Harbor Drive, PO Box C700, West Conshohocken, PA 19428-2959. United States

Documents
Document Sharing Hub
Full document details: ASTM E2446-05(2010)

TABLE 1 CR System Classification

CR System Classification	Minimum Signal-Noise Ratio
ASTM IP Special/Y	130
ASTM IP I/Y	65
ASTM IP II/Y	52
ASTM IP III/Y	43

3.2.7 *linearized signal intensity*—a numerical signal value of a picture element (pixel) of the digital image, which is proportional to the radiation dose. The linearized signal intensity is zero, if the radiation dose is zero.

3.2.8 *basic spatial resolution*—the read-out value of unsharpness measured with duplex wire IQI in accordance with Practice E2002 divided by 2 as effective pixel size of the CR system.

4. Significance and Use

4.1 There are several factors affecting the quality of a CR image including the spatial resolution of the IP system, geometrical unsharpness, scatter and contrast sensitivity (signal-to-noise ratio), as well as software. There are several additional factors (for example, scanning parameters), which affect the accurate reading of images on exposed IPs using an optical scanner.

4.2 This practice is to be used to establish a classification of CR system classes on the basis of a normalized SNR. Due to the difference between the methods, it is required to specify the CR system classes with spatial resolution values. The CR system classes in this document do not refer to any particular manufacturers' imaging plates. A CR system class results from the use of a particular imaging plate together with the exposure conditions, particularly total exposure, the scanner type and software and the scanning parameters. This classification system provides a means to compare differing CR technologies, as is common practice with film systems, which guides the user to the appropriate configuration, IP and technique for the application at hand. The class selected may not match the imaging performance of a corresponding film class due to the difference in the spatial resolution and scatter sensitivity. Therefore, the practice should always use IQIs for proof of contrast sensitivity and spatial resolution.

4.3 The quality factors can be determined most accurately by the tests described in this practice. Some of the system tests require special tools, which may not be available in user laboratories. Simpler tests are described for quality assurance in Practice E2445, which are designed for a fast test of the quality of CR systems and long-term stability and are recommended as practical user tests, should the user not have the special tools available as needed for the tests in this practice.

4.4 Manufacturers of industrial CR systems will use this practice. Users of industrial CR systems may also perform the tests and measurements outlined in this practice, provided that the required test equipment is used and the methodology is strictly followed. Any alternative methods may be applied if equivalence to the methods of this practice is proven to the appropriate Cognizant Engineering Organization.

4.5 The publication of CR system classes will enable specifying bodies and contracting parties to agree to particular system class, as a first step in arriving at the appropriate settings of a system, or the selection of a system. Confirmation of necessary image quality shall be achieved by using Practice E2033.

5. Apparatus

5.1 CR system evaluation depends on the combined properties of the phosphor imaging plate (IP) type, the scanner and software used, and the selected scan parameters. Therefore, documentation for each test shall include the IP type, scanner, software and scan parameters, and the results shall be calculated and tabulated prior to arriving at a class assignment. The

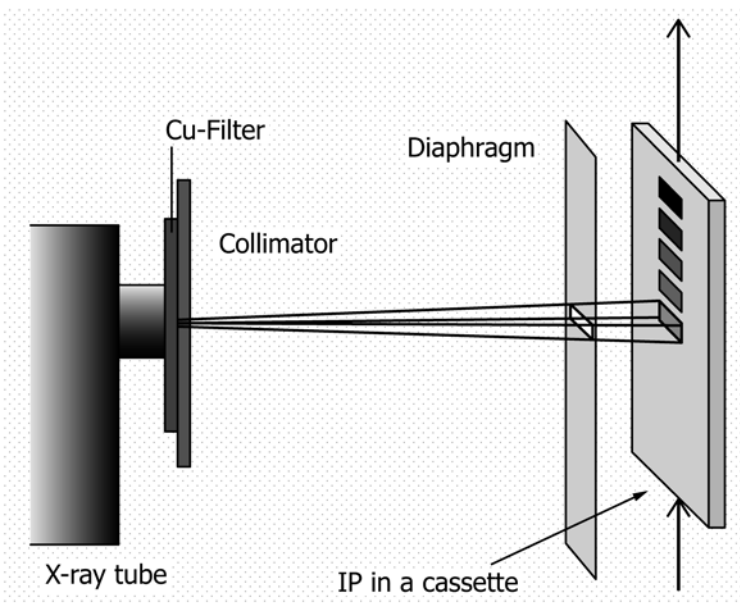

FIG. 1 Scheme of Experimental Arrangement for the Step Exposure Method

Documents
Document Sharing Hub
Full document details: ASTM E2446-05(2010)

applied test equipment for SNR measurement (Fig. 1) and algorithm 6.1.1 correspond to Test Method E1815. The recommended thickness for aperture test object (diaphragm) is 10.2-mm (0.4 in.) of Pb. The SDD shall be at least 1 m (39 in.). Do not use any material (for example, lead) behind the cassette and leave a free space of at least 1 m (39 in.) behind the cassette.

5.2 The step wedge method (Fig. 2) describes a simpler procedure for SNR measurement than described in Test Method E1815, which permits obtaining similar results with less expense, and less accuracy.

6. Procedure for quantitative measurement of image quality parameters

6.1 *Measurement of the Normalized Signal-to-Noise Ratio (SNR)*

6.1.1 *Step Exposure Method*—For measurement of the SNR, the following steps are taken (see also Test Method E1815):

6.1.1.1 The IP, with front and back lead screens of 0.1 mm (0.004 in.) thickness in the typical exposure cassette, shall be positioned in front of an X-ray tube with tungsten anode. Make the exposures with an 8 mm (0.32 in.) copper filter at the X-ray tube and the kilovoltage set such that the half value layer in copper is 3.5 mm (0.14 in.). The kilovoltage setting will be approximately 220 kV.

6.1.1.2 Determine the required exact kilovoltage setting by making an exposure (or an exposure rate) measurement with the detector placed at a distance of at least 750 mm (29.5 in.) from the tube target and an 8 mm (0.32 in.) copper filter at the tube. Then make a second measurement with a total of 11.5 mm (0.45 in.) of copper at the tube. These filters should be made of 99.9 % pure copper.

6.1.1.3 Calculate the ratio of the first and second readings. If this ratio is not 2, adjust the kilovoltage up or down and repeat the measurements until a ratio of 2 (within 5 %) is obtained. Record the setting of kilovoltage for use with the further IP tests.

6.1.1.4 The sensitive layer of the IP shall face the X-ray source. For gamma radiography with Ir-192, the measurements shall be carried out with 0.3 mm lead screens in front and behind the IP. Also 8 mm Cu shall be used for pre-filtering (see Fig. 1).

6.1.1.5 The scanner shall read with a dynamic range of ≥12 bit and operate at its highest spatial resolution or a spatial resolution for which the classification shall be carried out. Background and anti-shading correction may be used before the analysis of data, if it relates to the standard measurement procedure for all measurements. The procedure shall be carried out and documented for all sensitivity and latitude ranges and all read-out pixel sizes if any of these parameters change the SNR-analysis.

6.1.1.6 IPs are exposed in a similar way to film radiography and under the conditions described: signal and noise (σ_{PSL}) or SNR over dose curve shall be measured. It is especially important that the exposure of the IP for the SNR measurements be spatially uniform. Any nonuniformities in X-ray transmission of the cassette front, or defects in the Pb foil or in the phosphor itself could influence the SNR measurement. No major scratches or dust shall be visible in the measurement area. Therefore, exercise considerable care in selection and placement of the aperture, and selection and maintenance of the cassette, the lead screens and the phosphor screen. To achieve a uniform region of interest on to the IP, the following standard protocol is recommended. Other approaches may be used as long as a uniform exposure is created. At least twelve areas (test areas) of ≥400 mm^2 (0.62 in.^{2}) are evenly exposed on the same IP over the full working range of dose. Due to the different construction principles of scanners, the measurement shall be performed for all possible pixel sizes, if the results change. The digital read-out intensity values (gray values) shall be calibrated in such a way, that they are linear in relation to the radiation dose, which corresponds to the photo stimulated luminescence (PSL) intensity of the exposed IPs. These calibrated gray values shall be used for the calculation of the SNR. In order to get a reliable result at least six measurements shall be made on different samples, and the results are to be averaged for each of the twelve or more dose levels measured.

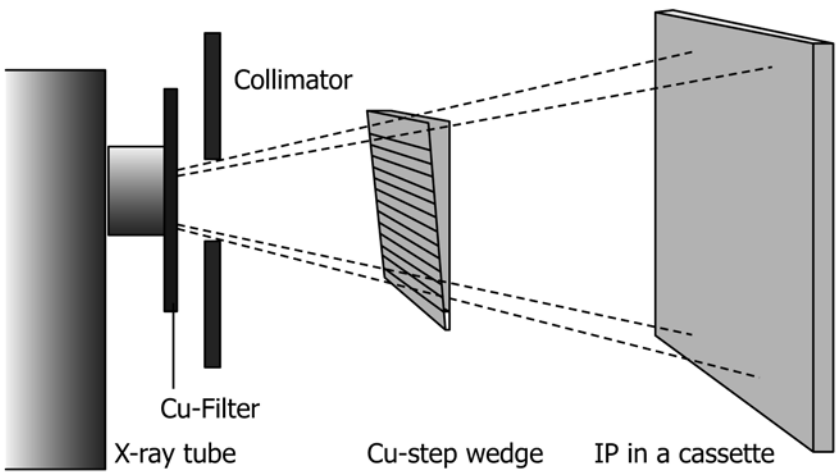

FIG. 2 Scheme for the Measurement of the SNR by the Step Wedge Method

Documents
Document Sharing Hub

Full document details: ASTM E2446-05(2010)