This international standard was developed in accordance with internationally recognized principles on standardization established in the Decision on Principles for the Development of International Standards, Guides and Recommendations issued by the World Trade Organization Technical Barriers to Trade (TBT) Committee.

Designation: E2446 – 24

Standard Practice for Manufacturing Characterization of Computed Radiography Systems[1]

This standard is issued under the fixed designation E2446; the number immediately following the designation indicates the year of original adoption or, in the case of revision, the year of last revision. A number in parentheses indicates the year of last reapproval. A superscript epsilon (ε) indicates an editorial change since the last revision or reapproval.

1. Scope

1.1 This practice covers the manufacturing characterization of computed radiography (CR) systems, consisting of a particular phosphor imaging plate (IP), scanner, software, scanner operational parameters, and an image display monitor, in combination with specified metal screens for industrial radiography.

1.2 The practice defines system tests to be used to characterize the systems of different suppliers and make them comparable for users.

1.3 This practice is intended for use by manufacturers of CR systems or certification agencies to provide quantitative results of CR system characteristics for nondestructive testing (NDT) user or purchaser consumption. Some of these tests require specialized test phantoms to ensure consistency of results among suppliers or manufacturers. These tests are not intended for users to complete, nor are they intended for long term stability tracking and lifetime measurements. However, they may be used for this purpose, if so desired. Practice E2445 describes tests which are intended for users to observe the CR performance and test the long term stability.

1.4 The CR system performance is described by the basic spatial resolution, contrast, signal and noise parameters, and the equivalent penetrameter sensitivity (EPS). Some of these parameters are used to compare with DDA characterization and film characterization data (see Practice E2597 and Test Method E1815).

NOTE 1—For film system characterization, the signal is represented by the optical density of 2 (above fog and base) and the noise as granularity. The signal-to-noise ratio is normalized by the aperture (similar to the basic spatial resolution) of the system and is part of characterization. This normalization is given by the scanning circular aperture of 100 µm of the micro-photometer, which is defined in Test Method E1815 for film system characterization.

1.5 The measurement of CR systems in this practice is restricted to a selected radiation quality to simplify the procedure. The properties of CR systems will change with radiation energy but not the ranking of CR system performance. Users of this practice may carry out the tests at different or additional radiation qualities (X-ray or gamma ray) if required.

1.6 The values stated in SI are to be regarded as the standard.

1.7 *This standard does not purport to address all of the safety concerns, if any, associated with its use. It is the responsibility of the user of this standard to establish appropriate safety, health, and environmental practices and determine the applicability of regulatory limitations prior to use.*

1.8 *This international standard was developed in accordance with internationally recognized principles on standardization established in the Decision on Principles for the Development of International Standards, Guides and Recommendations issued by the World Trade Organization Technical Barriers to Trade (TBT) Committee.*

2. Referenced Documents

2.1 *ASTM Standards:*[2]

E746 Practice for Determining Relative Image Quality Response of Industrial Radiographic Imaging Systems below 4 MeV

E1165 Test Method for Measurement of Focal Spots of Industrial X-Ray Tubes by Pinhole Imaging

E1316 Terminology for Nondestructive Examinations

E1815 Test Method for Classification of Film Systems for Industrial Radiography

E2002 Practice for Determining Image Unsharpness and Basic Spatial Resolution in Radiography and Radioscopy

E2007 Guide for Computed Radiography

E2033 Practice for Radiographic Examination Using Computed Radiography (Photostimulable Luminescence Method)

E2445 Practice for Performance Evaluation and Long-Term

[1] This practice is under the jurisdiction of ASTM Committee E07 on Nondestructive Testing and is the direct responsibility of Subcommittee E07.01 on Radiology (X and Gamma) Method.

Current edition approved June 1, 2024. Published June 2024. Originally approved in 2005. Last previous edition approved in 2023 as E2446 – 23. DOI: 10.1520/E2446-24.

[2] For referenced ASTM standards, visit the ASTM website, www.astm.org, or contact ASTM Customer Service at www.astm.org/contact. For *Annual Book of ASTM Standards* volume information, refer to the standard's Document Summary page on the ASTM website.

Copyright © ASTM International, 100 Barr Harbor Drive, PO Box C700, West Conshohocken, PA 19428-2959. United States

Documents
Document Sharing Hub

Full document details: ASTM E2446-24

Stability of Computed Radiography Systems
E2597 Practice for Manufacturing Characterization of Digital Detector Arrays
E2903 Test Method for Measurement of the Effective Focal Spot Size of Mini and Micro Focus X-ray Tubes

2.2 *ISO Standard:*[3]

ISO 17636-2 Non-Destructive Testing of Welds—Radiographic Testing—Part 2: X- and Gamma Ray Technologies with Digital Detectors

3. Terminology

3.1 *Definitions*—The definition of terms relating to gamma- and X-radiography, which appear in Terminology E1316, Guide E2007, and Practice E2033, shall apply to the terms used in this practice.

3.2 *Definitions of Terms Specific to This Standard:*

3.2.1 *computed radiography system (CR system), n*—a complete system of a storage phosphor imaging plate (IP), a corresponding read out unit (scanner or reader), software, scanner operational parameters, and an image display monitor, which converts the information of the IP into a digital image (see also Guide E2007).

3.2.2 *computed radiography system performance level, n*—a particular group of CR performance levels, which is characterized by an SNR_N (normalized signal-to-noise ratio) range, an interpolated basic spatial resolution range $iSR_b^{detector}$ and equivalent penetrameter sensitivity (EPS) shown in Table 4 in a specified exposure range.

3.2.3 *gain/amplification, n*—opto-electrical gain setting of the scanning system.

3.2.4 *ISO speed S_{IPx}, n*—defines the speed of a CR system and is calculated from the reciprocal dose value, measured in Gray (Gy), which is necessary to obtain a specified minimum SNR_N of a CR system performance level.

3.2.5 *linearized signal intensity, n*—a numerical signal value of a picture element (pixel) of the digital image, which is proportional to the radiation dose; the linearized signal intensity is zero, if the radiation dose is zero.

4. Significance and Use

4.1 There are several factors affecting the quality of a CR image including the basic spatial resolution of the IP system, geometrical unsharpness, scatter, and contrast sensitivity. There are several additional factors (for example, software and scanning parameters) that affect the accurate reading of images on exposed IPs using an optical scanner.

4.2 This practice is to be used to establish a characterization of CR system by performance levels on the basis of a normalized SNR, interpolated basic spatial detector resolution and EPS. The CR system performance levels in this practice do not refer to any particular manufacturers' imaging plates. A CR system performance level results from the use of a particular imaging plate together with the exposure conditions, standardized phantom, the scanner type, and software and the scanning parameters. This characterization system provides a means to compare differing CR technologies, as is common practice with film systems, which guides the user to the appropriate configuration, IP, and technique for the application at hand. The performance level selected may not match the imaging performance of a corresponding film class because of the difference in the spatial resolution and scatter sensitivity. Therefore, the user should always use IQIs for proof of contrast sensitivity and basic spatial resolution.

4.3 The measured performance parameters are presented in a characterization chart. This enables users to select specific CR systems by the different characterization data to find the best system for his specific application.

4.4 The quality factors can be determined most accurately by the tests described in this practice. Some of the system tests require special tools, which may not be available in user laboratories. Simpler tests are described for quality assurance and long term stability tests in Practice E2445.

4.5 Manufacturers of industrial CR systems or certification agencies will use this practice. Users of industrial CR systems may use Practice E2445 or perform some of the described tests and measurements outlined in this practice, provided that the required test equipment is used and the methodology is strictly followed. Any alternative methods or radiation qualities may be applied if equivalence to the methods of this practice is proven to the appropriate cognizant engineering organization.

4.6 The publication of CR system performance levels will enable specifying bodies and contracting parties to agree to particular system performance level, as a first step in arriving at the appropriate settings of a system, or the selection of a system. Confirmation of necessary image quality shall be achieved by using Practice E2033.

5. Apparatus

5.1 CR system evaluation depends on the combined properties of the phosphor imaging plate (IP) type, the scanner and software used, and the selected scan parameters and image display monitor. Therefore, documentation for each test shall include the IP type, scanner, software, scan parameters, and image display monitor, and the results shall be calculated and tabulated before arriving at a performance assignment. The applied test equipment for SNR measurement (Fig. 1) and algorithm 6.1.1 correspond to Test Method E1815. The recommended thickness for aperture test object (diaphragm) is 10.2 mm (0.4 in.) of Pb. The SDD shall be at least 1 m (39 in.). Do not use any material (for example, lead) behind the cassette and leave a free space of at least 1 m (39 in.) behind the cassette or use a steel screen of about 0.5 mm (0.02 in.) and a lead plate of >2 mm (0.08 in.) just behind the cassette (steel screen is positioned between cassette and lead) and in contact with the cassette.

5.2 The step wedge method (Fig. 2) describes a simpler procedure for SNR measurement than described in Test Method E1815, which permits obtaining similar results with less expense, and less accuracy.

[3] Available from International Organization for Standardization (ISO), 1, ch. de la Voie-Creuse, CP 56, CH-1211 Geneva 20, Switzerland, http://www.iso.org.

AVA Documents
Document Sharing Hub

Full document details: ASTM E2446-24

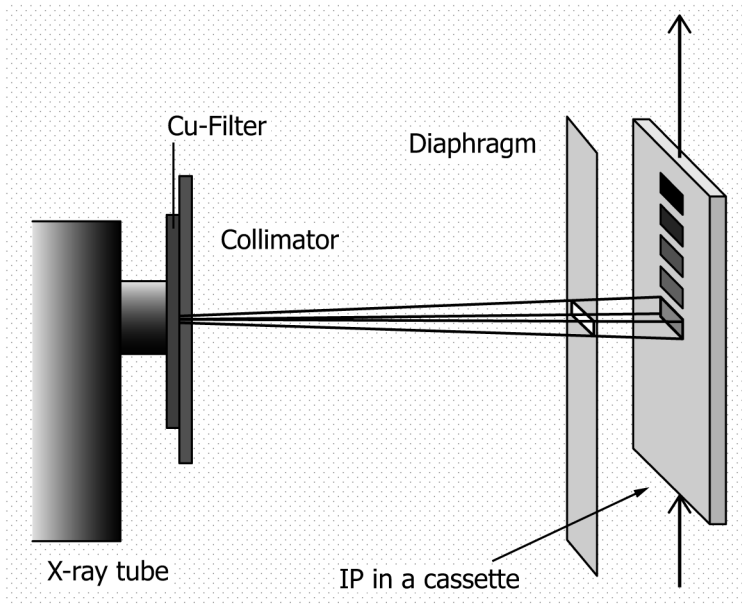

FIG. 1 Scheme of Experimental Arrangement for the Step Exposure Method

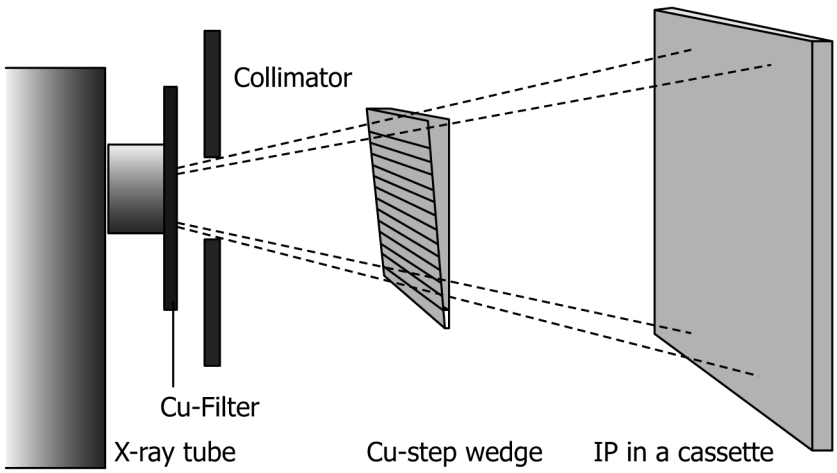

FIG. 2 Scheme for the Measurement of the SNR by the Step Wedge Method

6. Procedure for Quantitative Measurement of Image Quality Parameters

6.1 *Measurement of the Normalized Signal-to-Noise Ratio (SNR_N):*

6.1.1 *Step Exposure Method*—For measurement of the SNR, the following steps are taken (see also Test Method E1815):

6.1.1.1 The IP shall be positioned in front of an X-ray tube with tungsten anode. Make the exposures with an 8 mm (0.32 in.) copper filter at the X-ray tube and the kilovoltage set such that the half value layer in copper is 3.5 mm (0.14 in.). The kilovoltage setting will be approximately 220 kV. Metal screens can be used in the cassette if the manufacturer recommends its application. The focal spot size is not relevant for SNR measurements.

6.1.1.2 Determine the required exact kilovoltage setting by making an exposure (or an exposure rate) measurement with the detector placed at a distance of at least 750 mm (29.5 in.) from the tube target and an 8 mm (0.32 in.) copper filter at the tube. Then make a second measurement with a total of 11.5 mm (0.45 in.) of copper at the tube. These filters should be made of 99.9 % pure copper.

6.1.1.3 Calculate the ratio of the first and second readings. If this ratio is not 2, adjust the kilovoltage up or down and repeat the measurements until a ratio of 2 (within 5 %) is obtained. Record the setting of kilovoltage for use with the further IP tests.

6.1.1.4 The scanner shall read with a dynamic range of ≥12 bit and operate at its highest spatial resolution or a basic spatial resolution for which the characterization shall be carried out. Background and anti-shading correction may be used before the analysis of data, if it relates to the standard measurement procedure for all measurements.

6.1.1.5 The procedure shall be carried out and documented for one or more agreed sets of scanner parameters per imaging

AVA Documents
Document Sharing Hub

Full document details: ASTM E2446-24

plate type. It is recommended to use the standard parameters of the CR scanner as given by the manufacturer and the parameter set for the highest resolution.

6.1.1.6 IPs are exposed under the conditions described above: A signal (S) and noise (σ) or the quotient, the signal to noise ratio (SNR versus dose and pixel value curve shall be measured—see Fig. 3 and Fig. 4). It is important that the exposure of the IP for the SNR measurements be spatially uniform. Any non-uniformities in X-ray transmission of the cassette front, or defects in a front metal screen or in the phosphor layer itself could influence the SNR measurement. No major scratches or dust shall be visible in the measurement area. Therefore, exercise considerable care in selection and placement of the aperture, selection, and maintenance of the cassette, the metal screens (if any), and the imaging plate. To achieve a uniform area of interest on to the IP, the following standard protocol is recommended. Other approaches may be used as long as a uniform exposure is created. At least twelve areas (test areas) of ≥400 mm^2 (0.62 $in.^2$) are evenly exposed on the same IP over the full working range of dose. Due to the different construction principles of scanners, the measurement shall be performed for different pixel sizes as recommended by the manufacturer. A waiting time of 15 min is recommended between exposure and scan of the IPs to avoid distortions by fading effects. Typically, the characterization is performed for selected parameter sets only if agreed by the manufacturer and the certifying laboratory. The digital read-out pixel values shall be calibrated in such a way that they are linear in relation to the radiation dose, which corresponds to the photo stimulated luminescence (PSL) intensity of the exposed IPs. These calibrated pixel values shall be used for the calculation of the SNR to obtain a reliable result. Measurements shall be made on at least six different samples, and the results are to be averaged for each of the twelve or more dose levels measured.

6.1.1.7 The signal (S) and noise (standard deviation σ) of the measured pixel values shall be calculated from a region of interest (RoI) without shading or artifacts. Sample SNR values shall be taken in different regions of the image area under test to ensure that SNR values are within 10 %. The size of the RoI used to measure the mean signal and noise shall be at least 40 pixels by 200 pixels.

6.1.1.8 An example technique for ensuring reliable signal-to-noise measurements is described in the following. This can be achieved using a commonly available image processing tool. The signal and noise shall be calculated from a data set of 8000 values or more per exposed area. The unfiltered data set is subdivided into 200 groups or more with 40 values per group (200 or more profile lines with 40 pixels per profile). For each group with index i, the signal S_I and the noise value σ_i are calculated from the pixel values PV_{ij} in the region of interest (RoI). An increased number of groups per RoI yields a better (lower) uncertainty of the result. Fig. 3 describes the measurement procedure in detail and the equations to use. If $iSR_b^{detector}$ > pixel size, it is recommended to use a profile line width (lw) of:

$$lw_{pixel} = 40 \cdot \frac{SR_b^{detector}}{pixel\ size} \tag{1}$$

6.1.1.9 The final value S is obtained by the median of all S_i values. The final σ value is obtained by the median of all σ_i values. SNR shall be calculated as reference value SNR_N, normalized to a resolution of 88.6 µm, which is related to a squared aperture (pixel size of 88.6 μm^2 by 88.6 μm^2). The final value SNR_N is calculated by considering the measured interpolated basic spatial resolution $iSR_b^{detector}$, which is the larger value of both, measured in fast and slow scan direction (see 6.5):

$$SNR_N = SNR \cdot \frac{88.6\ \mu m}{iSR_b^{detector}} \tag{2}$$

where:

$iSR_b^{detector}$ = interpolated maximum value in µm of both basic spatial resolution values as measured in fast and slow scan direction (see 6.5).

NOTE 2—Test Method E1815 requires the use of a micro-photo densitometer with circular aperture of 100 µm diameter for the measurement of granularity σ_D of films. Because the pixels in digital images are organized in squares, the corresponding pixel size is calculated by sqrt ((100 µm)^2 π / 4) = 88.6 µm (1 µm = 3.93701E-05 in.). This value of 88.6 µm for normalization was selected for comparison of noise in digital images with film granularity.

6.1.1.10 SNR_N shall be plotted versus pixel value (Fig. 4) and versus exposure dose.

6.1.2 *Step Wedge Method (Manufacturer Test and Enhanced User Test)*—The measurement of the SNR can be performed with less accuracy using a step wedge, as shown in Fig. 2. This

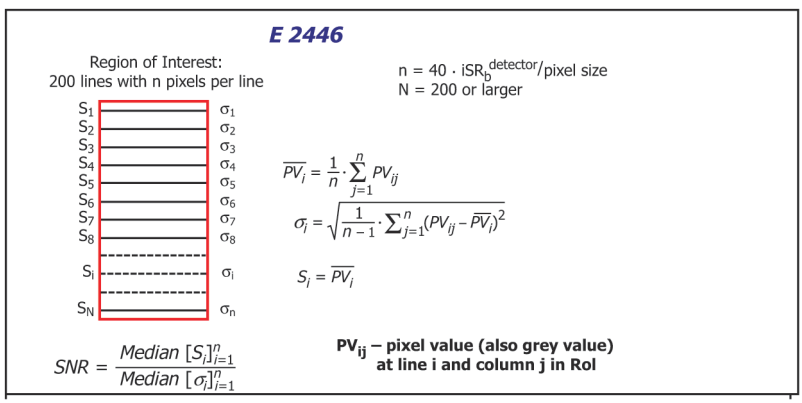

FIG. 3 Scheme for Measurement of SNR in the RoI with Pixel Values PV_{ij}

AVA Documents
Document Sharing Hub

Full document details: ASTM E2446-24

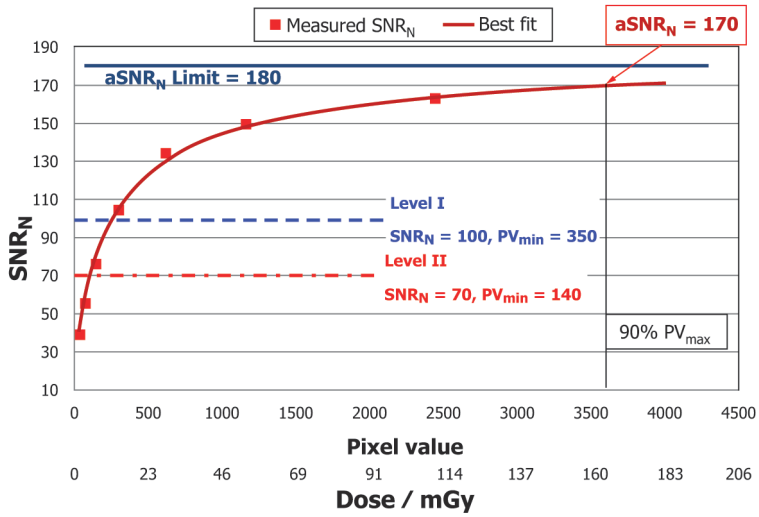

NOTE 1—The tested CR system qualifies for:
Level I performance from PV 350 – 4095 (see Table 4)
Level II performance from PV 140 – 4095 (see Table 4)
PV_{max} = 4095, as determined with procedure of 6.4

FIG. 4 Example Plot of Measured SNR_N Versus PV (12 bit system, $iSR_b^{detector}$ = 70 µm) for Determination of Level I and II Performance Range (see 6.4)

method, if approved by the cognizant engineering organization (CEO), may be of interest for users to determine the SNR with less expensive equipment:

6.1.2.1 For that purpose, a step wedge of Cu, with at least twelve equally increasing steps, shall be used as in the arrangement shown in Fig. 2. The selection of the X-ray voltage shall be as described in 6.1.1.1. The maximum thickness of the step wedge shall absorb 90 % of the radiation of the central beam, which requires a thickness of 11.7 mm (0.46 in.). To cover a range of two or more orders of magnitude of the radiation dose, at least two suitable and different exposures with adequate exposure time or tube current (mA) shall be made. A waiting time of 10 min is recommended between exposure and scan of the IPs to avoid distortions by fading effects. The distance between step wedge and IP shall be ≥500 mm (19.69 in.) to reduce the influence of scattered radiation. A magnification of 2× is recommended. A beam collimator shall be used to restrict exposures to the step wedge only. X-ray voltage and filtering shall be selected in accordance with 6.1.1.1 through 6.1.1.3.

NOTE 3—X-ray penetration through Cu-steps of different thickness is distorted by beam hardening and suitable adjustment of exposure is required.

6.1.2.2 The projected area of each step shall be about 20 mm by 20 mm (≥400 mm^2). SNR values should not be taken closer than four times the $iSR_b^{detector}$ to an edge.

6.1.2.3 All details for the measurement of the SNR shall correspond to 6.1.1.6 – 6.1.1.9. The graphical analysis shall be based on the plot of $SNR = f\left(\sqrt{exposure \cdot e^{-(\mu_{Cu} w_{Cu})}}\right)$, where μ_{Cu} is the attenuation coefficient, w_{Cu} is the wall thickness of the corresponding step of the step wedge, and the value "exposure" is calculated from exposure time (seconds) multiplied by tube current (mA).

NOTE 4—For accurate plots, it is necessary to consider the wall thickness dependence of μ_{Cu} on the wall thickness (beam hardening). The influence of scattered radiation should be reduced by exact collimation. Different exposures with different exposure time or mA-settings are recommended for the required plot. The exposure value (mAs) of the different exposures of the step wedge target should be increased by about 5.

6.2 *Contrast Sensitivity by Equivalent Penetrameter Sensitivity (EPS)*

6.2.1 The characterization by performance levels being based on the EPS can be performed with less accuracy on basis of visual evaluation of radiographs than by the quantitative SNR_N step exposure method using the following procedure on basis of Practice E746, as illustrated in Fig. 5. The standard procedure is the EPS measurement at 90 % of the maximum achievable pixel value, PV_{max} (see also 6.3 and Fig. 4) with a steel absorber as described in Practice E746 and the measurement of the effective attenuation coefficient. Optionally, the complete plot of EPS vs. dose curve may be measured (Fig. 5) and PV_{min} may be determined as shown in Fig. 6 for the different performance levels. Other fine grained materials than mild steel and different radiation qualities may be used if requested for other applications as, for example, testing of light materials in aerospace applications.

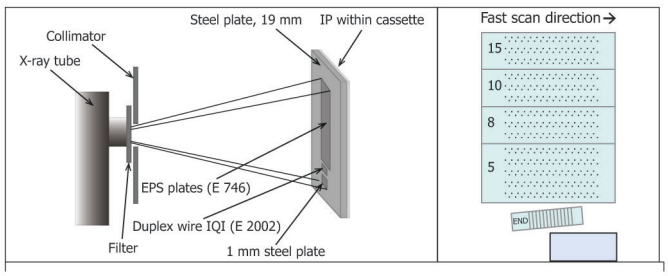

NOTE 1—The Duplex Wire IQI is Tilted Approximately 5°.

FIG. 5 Illustration of EPS Characterization Set Up (left) and Test Phantom (right)

AVA Documents
Document Sharing Hub

Full document details: ASTM E2446-24

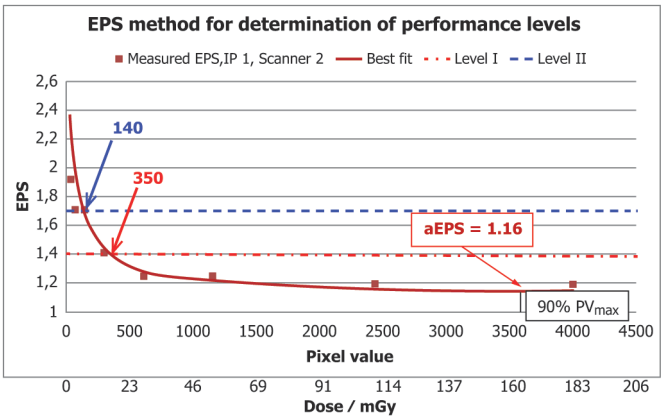

NOTE 1—The tested CR system qualifies for:
—Level I performance from PV 350–4095 (see Table 4)
—Level II performance from PV 140–4095 (see Table 4)
—PV_{max} = 4095, as determined with procedure of 6.4
—*aEPS* = 1.16

FIG. 6 Example Plot for Measured of EPS Versus PV (12 bit system, $iSR_b^{detector}$ = 70 µm) for Determination of Level I and II Performance Range

6.2.2 *Required Measurements and Evaluations*—These evaluations are adapted from Practices E746 and E2002. Image quality indicators from these standards and a 1 mm steel plate for measurement of the relative contrast are arranged in a standard phantom (Fig. 5) and exposed with a (Practice E746) 19 mm (¾ in.) absorber of mild steel to qualify. The tube voltage shall be 220 kV with 2 mm Cu in front of the tube port instead of 200 kV as recommended in Practice E746.

6.2.2.1 The EPS value shall be determined at least at 90 % of the PV_{max}. Alternatively, the EPS performance may be determined in the characterized linear or linearized PV range as illustrated in Fig. 5.

6.2.2.2 *Determination of Relative Contrast C_{1mm}*—Fig. 5 illustrates a typical layout for a 19 mm (¾ in.) thick steel plate, at least 20 cm (≈8 in.) wide by 25 cm (≈10 in.) long, containing a series of Practice E746 EPS plaques of varying thicknesses and hole sizes, a 1 mm steel plate, and a Practice E2002 unsharpness gauge with duplex wires oriented approximately 5° tilted to the plate edge direction for monitoring of the influence of the geometric unsharpness; all IQIs are situated on the source side. The 19 mm (¾ in.) steel plate should cover the complete IP and IP cassette. The X-ray source shall be collimated to the 19 mm (¾ in.) plate only. The surface finish of the absorber plate shall be no worse than RMS 250. If the EPS absorber plate does not cover the entire IP, the IP shall be masked with lead around the absorber plate.

TABLE 1 EPS Values on Standard 19 mm (¾ in.) Absorber Plate as a Function of Step and Hole Size

Plaque Number	Step Size mm (in.)	Hole Size mm (in.)	EPS %
15	0.38 (0.015)	0.71 (0.028)	1.92
		0.64 (0.025)	1.82
		0.58 (0.023)	1.71
10	0.25 (0.010)	0.79 (0.031)	1.66
		0.71 (0.028)	1.57
		0.64 (0.025)	1.49
8	0.20 (0.008)	0.71 (0.028)	1.41
		0.64 (0.025)	1.33
		0.58 (0.023)	1.25
5	0.13 (0.005)	0.81 (0.032)	1.19
		0.71 (0.028)	1.12
		0.64 (0.025)	1.05
		0.58 (0.023)	1.00
		0.50 (0.020)	0.94

6.2.3 *EPS Characterization by Practice E746*—For each exposure (data point in Fig. 6) at different dose of the set of Fig. 5, determine the lowest (best) EPS performance of each exposure by determining the duplex row (Practice E746 illustrates step layout and corresponding EPS %), where a minimum of 15 holes out of 30 holes in each duplex row (50 % rule) are clearly visible. Table 1 provides EPS values (see also Practice E746) for each visible duplex row on the specified standard of a 19 mm (¾ in.) absorber plate of steel. Plot the EPS (in %) taken with the set of Fig. 5 in a graph as presented in Fig. 6 that corresponds with the qualifying hole size row of Table 1, its corresponding exposure identification, and pixel value.

6.2.3.1 The source-to-detector distance (SDD) shall be at least 1 m (39 in.). The geometric unsharpness, u_g, shall not exceed 50 µm and u_g shall not exceed 20 % of $iSR_b^{detector}$. The

TABLE 2 Required Tests as described in Annex A1 and Annex A2, and Required Results

Required Test	Required Result
Geometric Distortion (by spatial linearity image quality indicators in CR Test Phantom, Annex A3, see Annex A1 for details.)	Fail if distortion >2 %
Laser Jitter (by T-target in CR Test Phantom, Annex A3, see Annex A1 for details.)	Not permitted Straight and continuous edges required
Laser Beam Scan Line Integrity (no test object required, see Annex A1 for details.)	Not permitted
Scan column dropout (no test object required, see Annex A1 for details.)	Not permitted
Scanner Slippage (by homogeneous strip slippage target in CR Test Phantom, Annex A3, see Annex A1 for details.)	Not permitted
Erasure (high absorption object required, see Annex A2 for details.)	Fail if >2 %
Shading (by homogeneous plate, three shading image quality targets in CR Test Phantom, Annex A3)	Fail if more than ±10 %
Banding	Fail if more than ±10 %
Test Results Shall be Reported, also in Case of Exceeding the Limits	**Result to Report**
PMT Non-linearity (by T-target in CR Test Phantom, Annex A3, see 6.6.2 for details and Annex A1)	Report if >2 %
Burn-In (high absorption object required, see Annex A2 for details)	Report if >2 %
Spatial Linearity (by spatial linearity image quality indicators in CR Test Phantom, Annex A3, see Annex A1 for details.)	Report if >2 %
Imaging plate response variation (no test object required, see Annex A2 for details.)	Report if > ±10 %
Optional Test on Request	**Result to Report**
Imaging Plate Fading (no test object required), optional test, see 6.6.1.2 and 6.6.1.3 and Annex A2 for details.	Report fading in %, calculated from values measured at 5 min and 2 h.

AVA Documents
Document Sharing Hub

Full document details: ASTM E2446-24