This international standard was developed in accordance with internationally recognized principles on standardization established in the Decision on Principles for the Development of International Standards, Guides and Recommendations issued by the World Trade Organization Technical Barriers to Trade (TBT) Committee.

Designation: E2952 – 23

Standard Specification for Air-Purifying Respiratory Protective Smoke Escape Devices (RPED)[1]

This standard is issued under the fixed designation E2952; the number immediately following the designation indicates the year of original adoption or, in the case of revision, the year of last revision. A number in parentheses indicates the year of last reapproval. A superscript epsilon (ε) indicates an editorial change since the last revision or reapproval.

1. Scope

1.1 This specification covers the minimum requirements for the design, performance, testing, and certification of air-purifying respiratory protective smoke escape devices for immediate emergency evacuation without entry/re-entry.

1.2 The purpose of this specification shall be to provide minimum requirements for respiratory protective escape devices that provide limited protection for 15 min for escape from the by-products of fire, including particulate matter, carbon monoxide, other toxic gases, and the effects of radiant heat.

1.3 The requirements of this specification specify an air-purifying respiratory protective escape device with a laboratory-tested 15-min service life intended to provide head, eye, and respiratory protection from particulate matter, irritants, and toxic gases and vapors commonly produced by fire.

1.4 Controlled laboratory tests that are used to determine compliance with the performance requirements of this specification shall not be deemed as establishing performance levels for all situations to which individuals can be exposed.

1.5 This specification shall not apply to the requirements for provision, installation, or use of air-purifying respiratory protective smoke escape devices.

1.6 This specification shall not apply to respiratory protective escape devices intended for use in circumstances in which an oxygen deficiency (oxygen less than 19.5 % by volume) exists or might exist.

1.7 This specification is not intended to be used as a detailed manufacturing or purchase specification, but shall be permitted to be referenced as a minimum requirement in purchase specifications.

1.8 The conformity assessment requirements of Guide F3050, Model C, shall apply to the certification of products in accordance with this specification.

1.9 *Units*—The values stated in SI units are to be regarded as standard. No other units of measurement are included in this standard.

1.10 *This standard does not purport to address all of the safety concerns, if any, associated with its use. It is the responsibility of the user of this standard to establish appropriate safety, health, and environmental practices and determine the applicability of regulatory limitations prior to use.*

1.11 *This international standard was developed in accordance with internationally recognized principles on standardization established in the Decision on Principles for the Development of International Standards, Guides and Recommendations issued by the World Trade Organization Technical Barriers to Trade (TBT) Committee.*

2. Referenced Documents

2.1 *ASTM Standards:*[2]

D1003 Test Method for Haze and Luminous Transmittance of Transparent Plastics

D4101 Classification System and Basis for Specification for Polypropylene Injection and Extrusion Materials

F1140 Test Methods for Internal Pressurization Failure Resistance of Unrestrained Packages

F3050 Guide for Conformity Assessment of Personal Protective Clothing and Equipment

F3387 Practice for Respiratory Protection

2.2 *CEN Standard:*[3]

EN 136 Respiratory protective devices - Full face masks - Requirements, testing, marking

2.3 *ISO Standards:*[4]

ISO/IEC 17065 Conformity Assessment—Requirements for Bodies Certifying Products, Processes and Services

ISO 9001 Quality Systems—Model for Quality Assurance in

[1] This specification is under the jurisdiction of ASTM Committee E54 on Homeland Security Applications and is the direct responsibility of Subcommittee E54.04 on Public Safety Equipment.

Current edition approved May 1, 2023. Published June 2023. Originally approved in 2014. Last previous edition approved in 2022 as E2952 – 22. DOI: 10.1520/E2952-23.

[2] For referenced ASTM standards, visit the ASTM website, www.astm.org, or contact ASTM Customer Service at service@astm.org. For *Annual Book of ASTM Standards* volume information, refer to the standard's Document Summary page on the ASTM website.

[3] Available from European Committee for Standardization (CEN), Avenue Marnix 17, B-1000, Brussels, Belgium, http://www.cen.eu.

[4] Available from International Organization for Standardization (ISO), 1, ch. de la Voie-Creuse, CP 56, CH-1211 Geneva 20, Switzerland, http://www.iso.org.

Copyright © ASTM International, 100 Barr Harbor Drive, PO Box C700, West Conshohocken, PA 19428-2959. United States

Documents
Document Sharing Hub
Full document details: ASTM E2952-23

Design, Development, Production, Installation, and Servicing

ISO 9002 Quality Systems—Model for Quality Assurance in Production, Installation, and Servicing.

2.4 *NFPA Standard:*[5]

NFPA 1981 Standard on Open-Circuit Self-Contained Breathing Apparatus for the Fire Service

2.5 *NIOSH Procedures:*[6]

NIOSH CET-APRS-STP-CBRN-0411, Rev 1.1 Laboratory Durability Conditioning Process for Environmental, Transportation and Rough Handling Use Conditions on Chemical, Biological, Radiological and Nuclear (CBRN) (AirPurifying or Self-Contained) Escape Respirator

3. Terminology

3.1 *Definitions:*

3.1.1 *air-purifying respiratory protective smoke escape device, RPED, n*—air-purifying respirator used to protect a person while escaping from a fire by removing certain contaminants of fire-generated products of combustion from the inhaled air.

3.1.2 *accessory, n*—item that may be provided with an RPED that does not affect its ability to meet the requirements of this specification.

3.1.3 *approved, adj*—acceptable to the authority having jurisdiction.

3.1.4 *authority having jurisdiction, n*—organization, office, or individual responsible for approving any equipment, an installation, or a procedure.

3.1.5 *basic plane, n*—plane through the centers of the external ear openings and the lower edges of the eye sockets.

3.1.6 *canister (air purifying), n*—container with *(1)* gas and vapor-removing sorbent or catalyst, or *(2)* gas- and vapor-removing sorbent or catalyst that removes gases and vapors and filter that removes particles from inspired air (or air drawn through the unit). **F3387**

3.1.7 *certification/certify, n/adj*—system whereby an organization determines that a manufacturer has demonstrated the ability to produce a product that complies with the requirements of this specification, authorizes the manufacturer to use a label on listed products that comply with the requirements of this specification, and establishes a follow-up program conducted by the organization as a check on the methods the manufacturer uses to determine continued compliance of labeled and listed products with the requirements of this specification.

3.1.8 *certification organization, n*—independent third-party organization that determines product compliance with the requirements of this specification with a labeling/listing/follow-up program.

3.1.9 *compliance/compliant, n/adj*—meeting or exceeding all applicable requirements of this specification.

3.1.10 *donning time, n*—time for equipment in hand to be placed over the head of the wearer and become functional. This time shall include the removal of an operational packaging.

3.1.11 *follow-up program, n*—sampling, inspections, tests, or other measures conducted by the certification organization on a periodic basis to determine the continued compliance of listed products that are being produced by the manufacturer to the requirements of this specification.

3.1.12 *gas, n*—fluid that has neither independent shape nor volume and tends to expand indefinitely.

3.1.13 *haze, n*—percent of incident light that is not transmitted in a straight line through the lens but forward scattered, greater than 2.5° diverging.

3.1.14 *identical respiratory protective escape device, n*—RPED that is produced to the same engineering and manufacturing specifications.

3.1.15 *labeled, adj*—equipment or material to which has been attached a label, symbol, or other identifying mark of an organization that is acceptable to the authority having jurisdiction and concerned with product evaluation, that maintains periodic inspection of production of labeled equipment or materials, and by whose labeling the manufacturer indicates compliance with appropriate standards or performance in a specified manner.

3.1.16 *light transmission, n*—ratio of the luminous (approximately 380- through 760-mm) radiant power transmitted by an object to the incident luminous radiant power.

3.1.17 *listed, adj*—equipment, materials, or services included in a list published by the certification organization.

3.1.18 *melt, v*—to change from solid to liquid or become consumed by action of heat in a manner that could injure the user.

3.1.19 *model, n*—term used to identify an RPED, including all variants to its design.

3.1.20 *product label, n*—marking affixed to the RPED by the manufacturer containing general information, warnings, care, maintenance, or similar data.

3.1.20.1 *Discussion*—This product label is not the certification organization's label, symbol, or identifying mark; however, the certification organization's label, symbol, or identifying mark may be attached to it or be part of it. *See* **labeled**.

3.1.21 *ready-to-use configuration, n*—RPED in its final packaging state before use that, upon opening or removing this operational package, allows the user to don the RPED within the required donning time.

3.1.22 *RPED, n*—a "short hand" acronym for Air-Purifying Respiratory Protective Smoke Escape Device.

3.1.23 *service life, n*—the manufacturer-declared duration of protection provided by the RPED for escape once the operational packaging is opened or removed from an RPED in a ready-to-use configuration.

3.1.24 *shall, v*—indicates a mandatory requirement.

[5] Available from National Fire Protection Association (NFPA), 1 Batterymarch Park, Quincy, MA 02169-7471, http://www.nfpa.org.

[6] Available from Centers for Disease Control and Prevention (CDC), 1600 Clifton Rd., Atlanta, GA 30329-4027, http://www.cdc.gov.

AVA Documents
Document Sharing Hub

Full document details: ASTM E2952-23

3.1.25 *shelf life, n*—duration that an RPED can be stored under proper conditions in its ready-to-use configuration and remain suitable for use.

4. Performance Requirements

4.1 *Carbon Dioxide (CO_2) Inhalation*—RPED shall be tested for CO_2 levels in the inspired air stream as specified in 7.1 and shall not contain CO_2 concentration levels that exceed 2.5 %.

4.2 *Donning*—RPED shall be tested for donning ability as specified in 7.2. The time needed to don the RPED shall not exceed 30 s.

4.3 *Breathing Resistance:*

4.3.1 RPED shall be tested for resistance to breathing as specified in 7.3. The maximum inhalation resistance shall be 81.5 mm water column below ambient pressure from the beginning of the test until its conclusion.

4.3.2 RPED shall be tested for resistance to breathing as specified in 7.3. The maximum exhalation resistance shall be 30.6 mm water column above ambient pressure from the beginning of the test until its conclusion.

4.4 *Particulate Filtration*—RPED shall be tested for the filtration of particles as specified in 7.4. The minimum filtration efficiency shall be 95 % at any time during the test.

4.5 *Total Inward Leakage:*

4.5.1 RPED shall be tested for proper fit as specified in 7.5. The maximum total inward leakage of the challenge agent shall be an average of 2 % of the inhaled air for any of the test subjects in any of the test exercises.

4.5.2 The measured inward leakage shall include the exhalation valve leakage.

4.6 *Optical Properties:*

4.6.1 *Light Transmission*—The vision area of the RPED shall be tested for light transmission as specified in 7.6.1. The vision area shall have minimum light transmission of 20 % and the haze shall not exceed 15 %.

4.6.2 *Field of Vision*—The field of vision of the RPED shall be tested as specified in 7.6.2 and shall have a score of at least 70.

4.6.3 *Fogging*—The vision area of the RPED shall be tested for fogging as specified in 7.6.3. The test subject shall be capable of reading the Snellen eye chart at the 20/100 level.

4.6.4 *Ocular Leakage*—RPED shall be tested for ocular leakage as specified in 7.6.4. The maximum total ocular leakage of the challenge agent shall be an average of 20 % of the outside challenge environment for any of the test subjects in any of the test exercises.

4.7 *Burst Strength:*

4.7.1 The RPED shall be tested for burst strength in its ready to use configuration as specified in 7.7.1.

4.7.2 The RPED in the ready-to-use configuration shall not experience a package burst until the internal pressure has been raised by at least 450 mbar (6.5 psi).

4.8 *Chemical Capacity*—The RPED shall be tested for gas breakthrough as specified in 7.8. The RPED shall have a minimum gas life of 15 min for the breakthrough conditions for each of the specific gases detailed herein.

4.9 *Inhalation Temperature*—RPED shall be tested for inspired air temperature as specified in 7.9. The inhalation temperature shall not exceed 90 °C dry bulb or 50 °C wet bulb when run at a cyclic flow.

4.10 *Soot Particulate:*

4.10.1 RPED shall be tested for increased inhalation breathing resistance as a result of soot particulate as specified in 7.10. The inhalation breathing resistance shall not exceed 204 mm water column.

4.10.2 RPED shall be tested for increased exhalation breathing resistance as a result of soot particulate as specified in 7.10. The exhalation breathing resistance shall not exceed 153 mm water column.

4.11 *Molten Polymeric Drip Resistance:*

4.11.1 RPED shall be tested for resistance to molten drips as specified in 7.11. Any after flame shall not exceed 5 s.

4.11.2 RPED shall be tested for resistance to molten drips as specified in 7.11. The decrease in inhalation resistance shall not exceed 25 %.

4.11.3 RPED shall be tested for resistance to molten drips as specified in 7.11. No component shall drip, melt, or develop a hole that is visible to the unaided eye.

5. Design Requirements

5.1 *General:*

5.1.1 The design of the RPED shall provide protection to the wearer's head, eyes, and respiratory system specified by this specification.

5.1.2 The RPED shall consist of at least a hood and a respiratory protection system that incorporates a canister.

5.1.2.1 At a minimum, the canister shall be provided with an operational packaging seal that meets the requirements of 7.7.2.

5.1.3 All materials shall be free of sharp edges, burrs, and rough spots.

5.1.4 Materials containing latex shall be labeled as such.

5.1.5 The RPED shall not require the use of hands to maintain the RPED in place on the user or maintain the proper functioning of the RPED other than for donning and doffing.

5.1.6 The RPED shall have a tamper seal in its ready-to-use configuration. The tamper seal shall indicate whether the ready-to-use configuration of the RPED has been breached.

5.1.7 The tamper seal shall be secured against accidental opening but shall be able to be broken rapidly without the use of tools. Where the tamper seal has been broken, it shall be visually obvious.

5.1.8 The operational packaging seal required by 7.7 shall be permitted to be the same as the tamper seal.

5.2 *Hood:*

5.2.1 The RPED shall be designed as a hooded device. The hood shall cover the entire head of the wearer.

5.2.2 The RPED hood shall be available in not more than three separate and distinct sizes that fit all the anatomical dimensions specified in Table 1.

AVA Documents
Document Sharing Hub

Full document details: ASTM E2952-23

TABLE 1 Face, Neck, and Head Anatomical Dimensions

	Small (mm)	Medium (mm)	Large (mm)
Head Circumference	527–552	553–578	579–604
Neck Circumference	295–351	352–408	409–465
Face Length[A]	98.5–108.5	109–128.5	129–138.5
Lip Length	40–46	47–54	55–61

[A] Menton-nasal root depression length.

5.2.3 The RPED hood shall include an area for field of vision.

5.2.4 The hood shall be compatible with the wearing of eyeglasses.

5.3 *Respiratory Protection System:*

5.3.1 The respiratory protection system shall consist of a canister and a means of conveying the purified air to the wearer such that the RPED meets the performance requirements of 4.1 – 4.10 except 4.7.

5.3.2 The respiratory protection system shall be designed in such a manner that the canister(s) shall not be degraded by the CO_2 and humidity of the user's exhaled air.

5.3.3 The canister(s) shall be designed and installed so that the inhaled gas first passes through the particulate component before passing through the gas protection component.

5.4 *Accessories:*

5.4.1 Any accessories that are attached to an RPED shall not interfere with the function of the RPED or with the function of any of the RPED component parts.

5.4.2 Where an RPED is provided with an accessory or accessories that are attached to or integrated with the RPED, the RPED shall meet all of the design and performance requirements of this specification with the accessories installed. In all cases, such accessories shall not degrade the performance of the RPED.

6. Conditioning

6.1 *General:*

6.1.1 For the purpose of initial certification, a total of 42 RPED in the ready-to-use configuration shall be used as test specimens.

6.1.2 Ten of the RPED to be used for testing for the performance requirements specified in 4.5 shall be unconditioned.

6.1.3 The remaining 32 RPED shall be conditioned as specified in this section and in Table 2.

6.1.3.1 Thirty-one RPED shall be sequentially subjected to the conditioning procedures specified in 6.2 and 6.3 before testing for the performance requirements specified in 4.1, 4.3, 4.4, 4.6.1, 4.6.3, and 4.7 – 4.11.

6.1.3.2 Two RPED shall be subjected only to the conditioning procedure specified in 6.4 before testing for the performance requirements specified in 4.2 and 4.6.2

6.1.4 The conditioned or unconditioned state of the RPED shall be as specified in Table 2.

6.2 *Vibration Conditioning:*

6.2.1 Each RPED shall be placed into a compartment of the vibration equipment as specified in Fig. 1(a) and (b). Each RPED shall be conditioned in the ready-to-use configuration. The compartment shall be sized to allow horizontal movement in any direction of 7 mm ± 3 mm and free vertical movement.

6.2.2 The vibration equipment shall consist of a steel case affixed to a vertically moving piston that is attached to a rotating cam. The combined piston and case shall be raised by

TABLE 2 RPED Initial Certification Testing Matrix

Test Section	Test Specimen Number			
	Conditioning Section			
	Vibration 6.2	Durability 6.3	Temperature 6.4	No Conditioning
7.1 CO_2	41	41	41	
7.2 Donning			1-2	
7.3 Air Flow Resistance	3–4	3–4	3–4	
7.4 Particulate Filtration	4	4	4	
7.5 Inward Leakage Fit				5–14
7.6.1 Light Transmission	15	15	15	
7.6.2 Field of Vision			1	
7.6.4 Ocular Leakage				5–14
7.7 Burst Strength Test	16	16	16	
7.8 Capacity	17–37	17–37	17–37	
7.9 Inhalation Temperature	38	38	38	
7.10 Soot Particulate	39	39	39	
7.11 Molten Polymeric Drip	40	40	40	

Test Specimen Number	Test Section	Conditioning Requirements
1	7.6.2 Field of Vision	Temperature (6.4)
1–2	7.2 Donning	Temperature (6.4)
3–4	7.3 Air Flow Resistance	All
4	7.4 Particulate Filtration	All
5–14	7.5 Inward Leakage Fit	None
5–14	7.6.4 Ocular Leakage	None
15	7.6.1 Light Transmission	All
16	7.7 Burst Strength Test	All
17–37	7.8 Capacity	All
38	7.9 Inhalation Temperature	All
39	7.10 Soot Particulate	All
40	7.11 Molten Polymeric Drip	All
41	7.1 CO_2	All

AVA Documents
Document Sharing Hub

Full document details: ASTM E2952-23

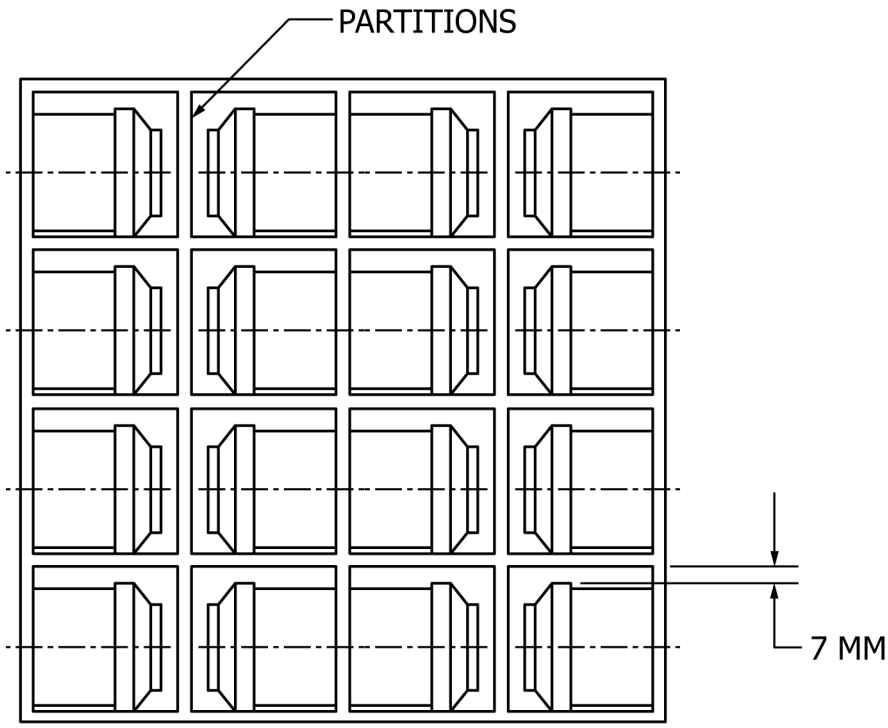

FIG. 1 (a) Vibration Test Device

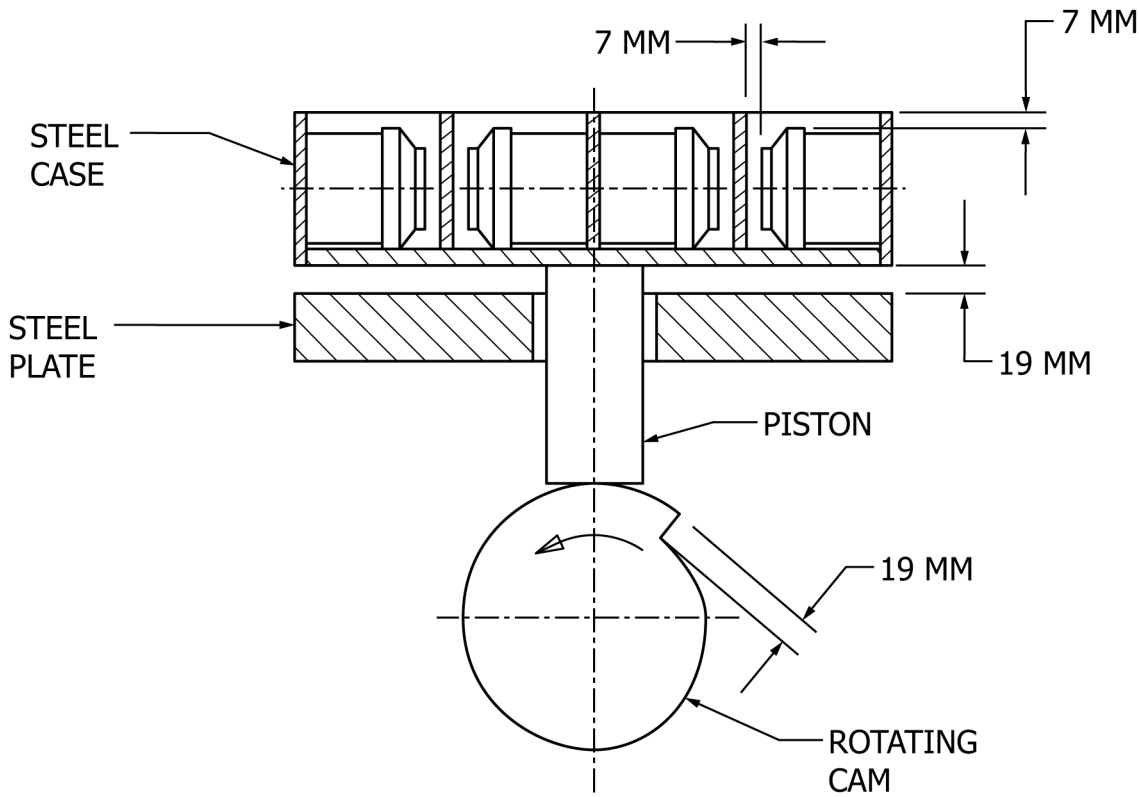

FIG. 1 (b) Vibration Test Device *(continued)*

a rotating cam to a vertical height of 19 mm ± 1 mm and allowed to fall under its own weight onto a steel plate as the cam rotates at a rate of 100 rpm ± 2 rpm.

6.2.3 Each RPED shall be vibrated for 10 000 cycles.

6.3 *Durability Conditioning:*

6.3.1 The rough handling drop test will be conducted on the number of required RPED test specimens as listed in Table 2 of this standard. The test specimens shall be conditioned as

AVA Documents
Document Sharing Hub

Full document details: ASTM E2952-23

specified in Section 6 and in Table 2 of this standard. The test method shall be in accordance with NIOSH CET-APRS-STP-CBRN-0411, Rev 1.1, sections 5.6.1 through 5.6.9.

6.4 *Temperature Conditioning:*

6.4.1 RPED shall be conditioned at 0 °C ± 2 °C for 24 h ± 1 h, followed by conditioning at 70 °C ± 2 °C for 24 h ± 1 h.

6.4.2 The transfer time of RPED between the elevated and low temperatures shall not exceed 5 min.

6.4.3 The low-temperature chamber recovery time after the door is closed shall not exceed 10 min.

6.4.4 After thermal conditioning, all but two of the RPED shall be conditioned at room temperature for a minimum of 24 h before testing begins.

6.4.5 The two remaining RPED shall be used for the testing required by 7.2.

7. Test Methods

NOTE 1—Unless otherwise specified, tolerances of ±0.1 mm shall be applied for dimensions of test fixtures.

7.1 *Carbon Dioxide Test:*

7.1.1 One RPED of each style or model of RPED shall be tested.

7.1.2 Testing shall be conducted as specified in the carbon dioxide test in EN 136.

7.2 *Donning Test:*

7.2.1 The donning test shall be performed within 1 h after the RPED has been removed from the conditioning specified in 6.4.4.

7.2.2 There shall be two test subjects who have not been trained in RPED use and have not previously donned an RPED. The test subjects shall be one female and one male. Neither test subject shall have any obvious mental or physical disabilities that prevent donning of the RPED.

7.2.3 The test subjects shall be given an RPED in the ready-to-use configuration. The test subjects shall be given 120 s to view the donning instructions that are supplied by the manufacturer or printed on the RPED.

7.2.4 After the 120 s required in 7.2.3 has passed, the test subjects shall be instructed to immediately don the RPED without any further instruction and the timer shall be started.

7.2.5 The test conductor shall confirm that the unit is positioned on the wearer's head consistent with the user information provided by the manufacturer.

7.3 *Air Flow Resistance Test:*

7.3.1 The RPED that is to be tested shall be secured to a temperature resistant full-face test head form. Where applicable, manufacturers shall supply fixtures to connect mouthpieces to the test head form.

7.3.2 A pressure probe shall be attached to the test head form. The pressure probe shall be a 6 mm outside diameter (OD) with 2 mm wall thickness metal tube having one open end and one closed end. The closed end shall have four equally spaced holes, each 2 mm ± 0.1 mm and positioned 6 mm ± 0.5 mm from the end of the pressure probe.

7.3.3 The closed end of the pressure probe shall extend through the test head form and shall exit at the center of the mouth. The pressure probe shall extend 13 mm ± 1.5/-0 mm outward from the surface of the center of the lips.

7.3.4 The open end of the pressure probe shall extend a maximum of 460 mm and a minimum of 25 mm outward from the back surface of the test head form.

7.3.5 A maximum 1.5 m length of nominal 5 mm inside diameter (ID) flexible smoothbore tubing with a nominal 2 mm wall thickness shall be permitted to be connected from the open end of the pressure probe to the inlet of the pressure transducer.

7.3.6 A differential pressure transducer that has the following characteristics shall be used:

7.3.6.1 *Range*—226 mm of water differential,

7.3.6.2 *Linearity*—±0.5 % full-scale (FS) best straight line,

7.3.6.3 *Line Pressure Effect*—Less than 1 % FS zero shift/68 bar,

7.3.6.4 *Output*—±2.5 V DC for ±FS,

7.3.6.5 *Output Ripple*—10 mV peak to peak,

7.3.6.6 *Regulation*—FS output shall not change more than ±0.1 % for input voltage change from 25 V to 35 V DC,

7.3.6.7 *Operating Temperature*—From -54 °C to 121 °C,

7.3.6.8 *Compensated Temperature*—From -18 °C to 71 °C, and

7.3.6.9 *Temperature Effects*—Within 2 % FS/56 °C error band.

7.3.7 The differential pressure transducer shall be appropriately connected to a strip chart recorder or suitable data acquisition system that has the following characteristics:

7.3.7.1 A chart width of 250 mm,

7.3.7.2 A pen speed of at least 730 mm/s (0.333-s FS),

7.3.7.3 An accuracy of ±0.25 % FS,

7.3.7.4 An input voltage range of 0 V to 1 V FS, and

7.3.7.5 A span set at 25 mm of chart per 25 mm water column.

7.3.8 The test head form shall be equipped with a stainless-steel breathing tube that has a 23 mm ID. The metal breathing tube shall be located on the centerline of the mouth and shall be flush with the test head form.

7.3.9 The metal breathing tube shall extend outward from the back or the base surface of the test head form a minimum of 203 mm and a maximum of 457 mm.

7.3.10 If flexible smoothbore tubing is run from the metal breathing tube to the inlet connection of the breathing machine, it shall have a minimum length of 1.2 m and an ID of 19 mm with a nominal 3 mm wall thickness.

7.3.11 A breathing machine as specified in NFPA 1981 shall be used. The breathing machine shall be calibrated before use.

7.3.11.1 The breathing machine shall use the lung breathing waveform for 40 L/min volume work rate but be set at 19 breaths per minute yielding a constant ventilation rate of 31.7 L/min and a peak inspiratory flow of 95 L/min ± 1 L/min.

7.3.11.2 The test conditions shall be as follows:

(1) Ambient Temperature—22 °C ± 3 °C,

(2) Relative Humidity—50 % ± 25 %, and

(3) Barometric Pressure—750 mm Hg + 50/-70 mm Hg.

7.3.11.3 The pressure shall be read from the strip chart recorder to determine pass/fail.

7.4 *Particulate Filtration Test:*

7.4.1 The RPED shall be mounted and sealed on a Scott Aviation model No. 803609-01 or 803603-01 test head form or

AVA Documents
Document Sharing Hub

Full document details: ASTM E2952-23