This international standard was developed in accordance with internationally recognized principles on standardization established in the Decision on Principles for the Development of International Standards, Guides and Recommendations issued by the World Trade Organization Technical Barriers to Trade (TBT) Committee.

Designation: E3020 – 22

An American National Standard

Standard Practice for Ignition Sources[1]

This standard is issued under the fixed designation E3020; the number immediately following the designation indicates the year of original adoption or, in the case of revision, the year of last revision. A number in parentheses indicates the year of last reapproval. A superscript epsilon (ε) indicates an editorial change since the last revision or reapproval.

1. Scope

1.1 This practice describes a series of ignition sources that have been used and that are potentially applicable to assessing fire-test-response characteristics resulting from the ignition of materials, products, or assemblies.

1.2 This practice does not identify which of the ignition sources described is applicable to any specific use since that is a function of the associated fire hazard (see also 5.2).

1.3 This practice is not necessarily comprehensive and it is possible that other applicable ignition sources exist (see also 5.3).

1.4 This practice describes both flaming and non-flaming ignition sources, since the outcome of a non-flaming ignition can be the eventual flaming ignition of these materials or products (see also 4.2).

1.5 This practice does not provide pass/fail criteria that can be used as a regulatory tool.

1.6 This fire standard cannot be used to provide quantitative measures.

1.7 Fire testing is inherently hazardous. Adequate safeguards for personnel and property shall be employed in conducting these tests.

1.8 This standard is used to measure and describe the response of materials, products, or assemblies to heat and flame under controlled conditions, but does not by itself incorporate all factors required for fire hazard or fire risk assessment of the materials, products, or assemblies under actual fire conditions.

1.9 This practice contains notes and footnotes which provide explanatory material. These notes and footnotes (excluding those in tables and figures) shall not be considered requirements of the standard.

1.10 The values stated in SI units are to be regarded as standard in referee decisions. No other units of measurement are included in this standard. See IEEE/ASTM SI 10 for further details.

1.11 *This standard does not purport to address all of the safety concerns, if any, associated with its use. It is the responsibility of the user of this standard to establish appropriate safety, health, and environmental practices and determine the applicability of regulatory limitations prior to use.*

1.12 *This international standard was developed in accordance with internationally recognized principles on standardization established in the Decision on Principles for the Development of International Standards, Guides and Recommendations issued by the World Trade Organization Technical Barriers to Trade (TBT) Committee.*

2. Referenced Documents

2.1 *ASTM Standards:*[2]

D635 Test Method for Rate of Burning and/or Extent and Time of Burning of Plastics in a Horizontal Position

D1929 Test Method for Determining Ignition Temperature of Plastics

D3675 Test Method for Surface Flammability of Flexible Cellular Materials Using a Radiant Heat Energy Source

D3874 Test Method for Ignition of Materials by Hot Wire Sources

D5025 Specification for Laboratory Burner Used for Small-Scale Burning Tests on Plastic Materials

D5207 Practice for Confirmation of 20-mm (50-W) and 125-mm (500-W) Test Flames for Small-Scale Burning Tests on Plastic Materials

D5424 Test Method for Smoke Obscuration of Insulating Materials Contained in Electrical or Optical Fiber Cables When Burning in a Vertical Cable Tray Configuration

D5537 Test Method for Heat Release, Flame Spread, Smoke Obscuration, and Mass Loss Testing of Insulating Materials Contained in Electrical or Optical Fiber Cables When Burning in a Vertical Cable Tray Configuration

D6194 Test Method for Glow-Wire Ignition of Materials

E84 Test Method for Surface Burning Characteristics of Building Materials

E108 Test Methods for Fire Tests of Roof Coverings

E136 Test Method for Assessing Combustibility of Materials

[1] This practice is under the jurisdiction of ASTM Committee E05 on Fire Standards and is the direct responsibility of Subcommittee E05.33 on Fire Safety Engineering.

Current edition approved Feb. 1, 2022. Published March 2022. Originally approved in 2015. Last previous edition approved in 2016 as E3020-16a. DOI: 10.1520/E3020–22.

[2] For referenced ASTM standards, visit the ASTM website, www.astm.org, or contact ASTM Customer Service at service@astm.org. For *Annual Book of ASTM Standards* volume information, refer to the standard's Document Summary page on the ASTM website.

Copyright © ASTM International, 100 Barr Harbor Drive, PO Box C700, West Conshohocken, PA 19428-2959. United States

Documents
Document Sharing Hub

Full document details: ASTM E3020-22

Using a Vertical Tube Furnace at 750°C
E162 Test Method for Surface Flammability of Materials Using a Radiant Heat Energy Source
E176 Terminology of Fire Standards
E648 Test Method for Critical Radiant Flux of Floor-Covering Systems Using a Radiant Heat Energy Source
E662 Test Method for Specific Optical Density of Smoke Generated by Solid Materials
E906/E906M Test Method for Heat and Visible Smoke Release Rates for Materials and Products Using a Thermopile Method
E1321 Test Method for Determining Material Ignition and Flame Spread Properties
E1352 Test Method for Cigarette Ignition Resistance of Mock-Up Upholstered Furniture Assemblies
E1353 Test Methods for Cigarette Ignition Resistance of Components of Upholstered Furniture
E1354 Test Method for Heat and Visible Smoke Release Rates for Materials and Products Using an Oxygen Consumption Calorimeter
E1537 Test Method for Fire Testing of Upholstered Furniture
E1590 Test Method for Fire Testing of Mattresses
E1623 Test Method for Determination of Fire and Thermal Parameters of Materials, Products, and Systems Using an Intermediate Scale Calorimeter (ICAL)
E1822 Test Method for Fire Testing of Stacked Chairs
E1995 Test Method for Measurement of Smoke Obscuration Using a Conical Radiant Source in a Single Closed Chamber, With the Test Specimen Oriented Horizontally
E2058 Test Methods for Measurement of Material Flammability Using a Fire Propagation Apparatus (FPA)
E2187 Test Method for Measuring the Ignition Strength of Cigarettes
E2574/E2574M Test Method for Fire Testing of School Bus Seat Assemblies
IEEE/ASTM SI 10 American National Standard for Use of the International System of Units (SI): The Modern Metric System

2.2 *Institute of Electrical and Electronic Engineers (IEEE) Standards:*[3]

IEEE 383 IEEE Standard for Qualifying Class 1E Electric Cables and Field Splices for Nuclear Power Generating Stations
IEEE 1202 IEEE Standard for Flame Testing of Cables for Use in Cable Tray in Industrial and Commercial Occupancies

2.3 *International Organization for Standardization (ISO) Standards:*[4]

ISO 871 Plastics—Determination of Ignition Temperature Using a Hot-Air Furnace
ISO 5657 Reaction to Fire Tests—Ignitability of Building Products Using a Radiant Heat Source
ISO 5659-2 Plastics—Smoke Generation Part 2: Determination of Optical Density by a Single-Chamber Test
ISO 5660-1 Reaction to Fire Tests—Heat Release, Smoke Production and Mass Loss Rate—Part 1: Heat Release (Cone Calorimeter Method)
ISO 8191-1 Furniture—Assessment of the Ignitability of Upholstered Furniture—Part 1: Ignition Source: Smouldering Cigarette
ISO 8191-2 Furniture—Assessment of the Ignitability of Upholstered Furniture—Part 2: Ignition Source: Match Flame Equivalent
ISO 9705 Reaction to Fire Tests—Full-Scale Room Test for Surface Products
ISO 12863 Standard Test Method for Assessing the Ignition Propensity of Cigarettes
ISO 12949 Standard Test Method for Measuring the Heat Release Rate of Low Flammability Mattresses and Mattress Sets
ISO 13943 Fire Safety—Vocabulary

2.4 *International Electrotechnical Commission (IEC) Standards:*[5]

IEC 60332-1-2 Tests on Electric and Optical Fibre Cables Under Fire Conditions—Part 1-2: Test for Vertical Flame Propagation for a Single Insulated Wire or Cable—Procedure for 1 kW Pre-mixed Flame
IEC 60332-2-1 Tests on Electric and Optical Fibre Cables Under Fire Conditions—Part 2-1: Test for Vertical Flame Propagation for a Single Small Insulated Wire or Cable – Apparatus
IEC 60332-3-10 Tests on Electric and Optical Fibre Cables Under Fire Conditions—Part 3-10: Test for Vertical Flame Spread of Vertically-mounted Bunched Wires or Cables—Apparatus
IEC 60695-2-10 Fire Hazard Testing—Part 2-10: Glowing/Hot-Wire Based Test Methods—Glow-Wire Apparatus and Common Test Procedure
IEC 60695-2-11 Fire Hazard Testing—Part 2-11: Glowing/Hot-Wire Based Test Methods—Glow-Wire Flammability Test Method for End-Products
IEC/TS 60695-2-20 Fire Hazard Testing—Part 2-20: Glowing/Hot-Wire Based Test Methods—Hot Wire Ignition Test—Apparatus, Confirmatory Test Arrangement and Guidance
IEC TS 60695-11-2 Fire Hazard Testing—Part 11-2: Test Flames—1 kW Nominal Pre-Mixed Flame—Apparatus, Confirmatory Test Arrangement and Guidance
IEC TS 60695-11-3 Fire Hazard Testing—Part 11-3: Test Flames—50 W Flame—Apparatus and Confirmational Test Methods
IEC TS 60695-11-4 Fire Hazard Testing—Part 11-4: Test Flames—50 W Flame—Apparatus and Confirmational Test Methods

[3] Available from Institute of Electrical and Electronics Engineers, Inc. (IEEE), 445 Hoes Ln., Piscataway, NJ 08854-4141, http://www.ieee.org.

[4] Available from International Organization for Standardization (ISO), 1, ch. de la Voie-Creuse, CP 56, CH-1211 Geneva 20, Switzerland, http://www.iso.org.

[5] Available from International Electrotechnical Commission (IEC), 3, rue de Varembé, P.O. Box 131, CH-1211 Geneva 20, Switzerland, http://www.iec.ch.

AVA Documents
Document Sharing Hub

Full document details: ASTM E3020-22

2.5 *National Fire Protection Association (NFPA) Standards:*[6]

NFPA 260 Methods of Tests and Classification System for Cigarette Ignition Resistance of Components of Upholstered Furniture

NFPA 261 Method of Test for Determining Resistance of Mock-Up Upholstered Furniture Material Assemblies to Ignition by Smoldering Cigarettes

NFPA 262 Method of Test for Flame Travel and Smoke of Wires and Cables for Use in Air-Handling Spaces

NFPA 265 Methods of Fire Tests for Evaluating Room Fire Growth Contribution of Textile or Expanded Vinyl Wall Coverings on Full Height Panels and Walls

NFPA 270 Test Method for Measurement of Smoke Obscuration Using a Conical Radiant Source in a Single Closed Chamber

NFPA 286 Methods of Fire Tests for Evaluating Contribution of Wall and Ceiling Interior Finish to Room Fire Growth

NFPA 287 Test Methods for Measurement of Flammability of Materials in Cleanrooms Using a Fire Propagation Apparatus (FPA)

NFPA 289 Method of Fire Test for Individual Fuel Packages

NFPA 701 Methods of Fire Tests for Flame Propagation of Textiles and Films

2.6 *Underwriters Laboratories (UL) Standards:*[7]

UL 94 Tests for Flammability of Plastic Materials for Parts in Devices and Appliances

UL 1040 Fire Test of Insulated Wall Construction

UL 1666 Test for Flame Propagation Height of Electrical and Optical-Fiber Cables Installed Vertically in Shafts

UL 1685 Vertical-Tray Fire-Propagation and Smoke-Release Test for Electrical and Optical-Fiber Cables

UL 1715 Standard for Fire Test of Interior Finish Material

2.7 *Federal Aviation Administration Standard:*[8]

Aircraft Material Fire Test Handbook DOT/FAA/AR-00/12, FAA Technical Center, April 2000

2.8 *FM Global Standard:*[9]

FM 4880 Approval Standard for Class 1 Fire Rating of Insulated Wall or Wall and Roof/Ceiling Panels—Interior Finish Materials or Coatings and Exterior Wall Systems

2.9 *U.S. Department of Commerce Standard:*[10]

16 CFR 1633 Standard for the Flammability (Open-Flame) of Mattresses and Mattress and Foundation Sets

2.10 *British Standards Institution Standard:*[11]

BS 5852 Methods of test for assessment of the ignitability of upholstered seating by smouldering and flaming ignition sources

2.11 *California Technical Bulletins:*

CAL TB 121 Flammability Test Procedure for Mattresses for Use in High Risk Occupancies (1980)

CAL TB 133 Flammability Test Procedure for Seating Furniture for Use in Public Occupancies (1991)

3. Terminology

3.1 Use Terminology E176 or ISO 13943 for definitions of terms used in this test method and associated with fire issues. Where differences exist in definitions, those contained in Terminology E176 shall be used.

3.2 *Definitions:*

3.2.1 *ignition, n*—the initiation of combustion.

3.2.1.1 *Discussion*—The combustion may be evidenced by glow, flame, detonation, or explosion. The combustion may be sustained or transient. **E176**

3.2.2 *piloted ignition, n*—ignition of combustible gases or vapors by a pilot source of ignition (compare spontaneous ignition, unpiloted ignition). **E176**

3.2.3 *pilot source of ignition, n*—a discrete source of energy, such as, for example, a flame, spark, electrical arc, or glowing wire (compare piloted ignition, unpiloted ignition). **E176**

3.2.4 *smoldering, n*—combustion of a solid without flame, often evidenced by visible smoke.

3.2.4.1 *Discussion*—Smoldering can be initiated by small sources of ignition, especially in dusts or fibrous or porous materials, and may persist for an extended period of time after which a flame may be produced. **E176**

3.2.5 *spontaneous ignition, n*—unpiloted ignition caused by an internal exothermic reaction (compare piloted ignition). **E176**

3.2.6 *sustained flaming, n*—flame on or over the surface of a test specimen that lasts longer than a defined period of time (contrast transitory flaming).

3.2.6.1 *Discussion*—Typically, the same defined period is used to define "transitory flaming." See the specific standard test method for applicable defined period of time. **E176**

3.2.7 *transitory flaming, n*—flame on or over the surface of a test specimen that does not last longer than a defined period of time (contrast sustained flaming).

3.2.7.1 *Discussion*—Typically, the same defined period of time is used to define "sustained flaming." See the specific standard test method for applicable defined period of time. **E176**

3.2.8 *unpiloted ignition, n*—ignition caused by one or more sources of energy without the presence of a pilot source of ignition (compare piloted ignition, spontaneous ignition). **E176**

4. Summary of Practice

4.1 This practice describes a series of standard ignition sources used in test methods, specifications, or regulations to assess fire-test-response characteristics of materials, products, or assemblies.

4.2 These ignition sources include those that assess the response to non-flaming ignition sources, including smoldering cigarettes, glow wires, hot wires, and radiant heat sources.

[6] Available from National Fire Protection Association (NFPA), 1 Batterymarch Park, Quincy, MA 02169-7471, http://www.nfpa.org.

[7] Available from Underwriters Laboratories (UL), 2600 N.W. Lake Rd., Camas, WA 98607-8542, http://www.ul.com.

[8] Available from Federal Aviation Administration (FAA), 800 Independence Ave., SW, Washington, DC 20591, http://www.faa.gov.

[9] Available from FM Global, Norwood, MA, www.fmglobal.com.

[10] Available from U.S. Consumer Product Safety Commission, Washington, DC, 20207.

[11] Available from British Standards Institution (BSI), 389 Chiswick High Rd., London W4 4AL, U.K., http://www.bsigroup.com.

AVA Documents
Document Sharing Hub

Full document details: ASTM E3020-22

4.3 These ignition sources include those that assess the response to flaming ignition sources, including both premixed flames and diffusion flames.

4.4 This practice does not offer pass/fail criteria.

4.5 The information included in this practice is representative of the ignition sources in the various standards at the time this practice was written. Users of this practice are encouraged to consult the latest edition of any standard at the time of proposed use of an ignition source.

5. Significance and Use

5.1 A variety of standard test methods, specifications, and regulations have been issued by a number of different standards developing organizations and regulatory authorities that contain ignition sources used to assess fire-test-response characteristics associated with flaming and non-flaming ignition. This practice describes such ignition sources and provides information on the standard method in which they are described.

5.2 The ignition source to be chosen for any specific use needs to be relevant to the fire hazard associated with the intended application. Neither the scope of the standard containing the ignition source nor any other aspect of the standard has any bearing on the use of the ignition source for another application.

5.3 This practice is not expected to be a fully comprehensive list of ignition sources. If additional ignition sources are identified they can be added to the practice.

5.4 This practice does not describe test specimen preparation or detailed testing procedures for the materials or products.

5.5 This practice does not address limitations associated with the ignition sources described in this practice.

5.6 This practice does not necessarily address the latest edition of any standard referenced.

6. Classification of Ignition Sources

6.1 Ignition sources can be classified into the following two major categories: *(a)* flaming, which can be based on diffusion flames or premixed flames (typically gas burners) and *(b)* non-flaming, which can be based on smoldering ignition, glow wires, hot wires, and radiant heat sources. Radiant heat sources are often accompanied by a supplementary igniter, which can be a pilot flame.

6.2 *General Principles:*

6.2.1 When materials, products, or assemblies are exposed to thermal energy, once thermal decomposition has occurred, vapors and gases, potentially including flammable and combustible vapors, are generated. If the concentration of combustible or flammable vapors, or both, in the atmosphere falls between the lower and upper flammability limits, ignition will potentially result. Flammability limits are normally expressed as the percentage of fuel, by volume, in the fuel/air mixture.

6.2.2 If there is no external ignition source, other than radiant heat, this ignition represents spontaneous ignition.

6.2.3 If an external flame is present as the ignition energy source, even as a supplementary source, the ignition is known as piloted ignition.

6.2.4 After ignition has occurred, some burning materials have the potential to generate additional issues by forming flaming debris or molten drops. If this flaming debris spreads flame so as to ignite alternate combustible materials, this will accelerate flame spread.

6.2.5 The localized application of a heat source to some materials, products, or assemblies will result in glowing combustion. This can be evidenced by the formation of a carbonaceous char.

6.3 Overall characteristics of ignition sources follow.

6.3.1 The intensity of the ignition source. This is a measure of the thermal insult onto the test specimen resulting from the combined conduction, convection, and radiation effects caused by the ignition source.

6.3.2 The location of the impingement of the ignition source on the test specimen.

6.3.3 The duration of exposure of the test specimen and whether it is continuous or intermittent.

6.3.4 The orientation of the test specimen in relation to the ignition source.

6.3.5 The ventilation conditions in the vicinity of the ignition source and exposed surface of the test specimen.

6.4 *Diffusion Flame Ignition Sources*—In these ignition sources, a diffusion flame source, normally gas (typically propane, methane, or butane) flows through tubing without ingress of air prior to the base of the flame. These flames simulate natural flames and are particularly suitable for low intensity ignition sources and for horizontal or vertical exposures.

6.5 *Premixed Flame Ignition Sources*—In these ignition sources, a premixed flame source, normally gas (typically propane, methane, or butane) flows through a gas burner fitted with air inlet ports or an air intake manifold. Premixed flame sources are more directional than diffusion flame sources and can be used at higher intensities than diffusion flame sources.

7. Smoldering Cigarettes

7.1 Such ignition sources are included here because they are important. There are multiple regional and national differences between the various kinds of cigarettes used as ignition sources, including their mass and smoldering rates, and many of such differences have the potential to affect results. Two basic types of cigarettes are described here.

7.2 *Reduced Ignition Propensity Cigarettes*—Test Method E2187 (and ISO 12863) is a test used by regulators as a means of assessing whether any cigarette can be classified as a "reduced ignition propensity cigarette." In a number of countries, including the United States, Canada, and several European countries, commercial cigarettes need to comply with the regulatory requirements based on testing with one of these test methods. These cigarettes are being used as ignition sources in some testing.

7.2.1 Test Methods E1352 and E1353 are performed with commercial cigarettes (which are reduced ignition propensity cigarettes) as ignition sources. In these test methods the cigarettes are described as cigarettes without filter tips, made from natural tobacco 85 mm ± 2 mm long with a tobacco

AVA Documents
Document Sharing Hub

Full document details: ASTM E3020-22

packing density of 0.270 g/cm^3 ± 0.020 g/cm^3 and a total weight of 1.1 g ± 0.1 g. The smoldering rate of this cigarette is 0.10 mm/s ± 0.01 mm/s when the cigarette is allowed to burn downward in a draft-protected area. With the cigarette supported at the bottom in a vertical position, the burning rate is determined in the region from 10 mm to 50 mm, measured from the top.

7.2.2 ISO 8191-1 is another test method that is performed using reduced ignition propensity cigarettes as ignition sources. In this test method, the cigarettes are described as cigarettes without filter tips, made from natural tobacco 70 mm ± 4 mm long with a diameter of 8.0 mm ± 0.5 mm and a total weight of 1.0 g ± 0.1 g. The smoldering rate of these cigarettes is 0.07 mm/s ± 0.02 mm/s when the cigarette is allowed to burn downward in a draft-protected area. With the cigarette supported at the bottom in a vertical position, the burning rate is determined in the region from 5 mm to 55 mm, measured from the top.

7.3 *Standard Reference Material Cigarettes (SRM 1196)*—These cigarettes were designed to simulate the ignition strength of those cigarettes that were in commercial use in the United States before the development of Test Method E2187 and that had been identified as having the strongest ignition strength. Thus, these cigarettes do not comply with the requirements of "reduced ignition propensity cigarettes" as tested in accordance with Test Method E2187 or ISO 12863.

7.3.1 The cigarettes, described as NIST SRM 1196[12] cigarettes, are cigarettes without filter tips, made from natural tobacco, 83 mm ± 2 mm long with a tobacco packing density of 0.270 g/cm^3 ± 0.020 g/cm^3 and a total weight of 1.1 g ± 0.1 g. These cigarettes are used in NFPA 260 and NFPA 261.

8. Non-Flaming Ignition Sources

8.1 *Glow Wires:*

8.1.1 This ignition source simulates overheating of materials by heating the glow-wire to an elevated temperature, normally a temperature in the range of 550 to 960 °C.

8.1.2 The glow-wire apparatus and ignition source are shown in Fig. 1 (Test Method D6194).

8.1.3 The glow-wire itself consists of a loop of Nichrome (nickel/chromium) (80% nickel and 20% chromium, iron-free) wire, 4 mm in nominal diameter.

8.1.4 The temperature of the glow-wire is measured by the use of a Type K sheathed fine-wire thermocouple having a maximum nominal overall diameter of 1.0 mm. and wires suitable for continuous operation at temperatures up to 960 °C, with the welded point located inside the sheath, for measuring the temperature of the glow-wire. Examples of suitable wire compositions are Nickel-Chromium (NiCr) and Nickel-Aluminum (NiAl). The thermocouple sheath is constructed of

[12] Available from National Institute of Standards & Technology (NIST), http://www.nist.gov/srm/index.cfm.

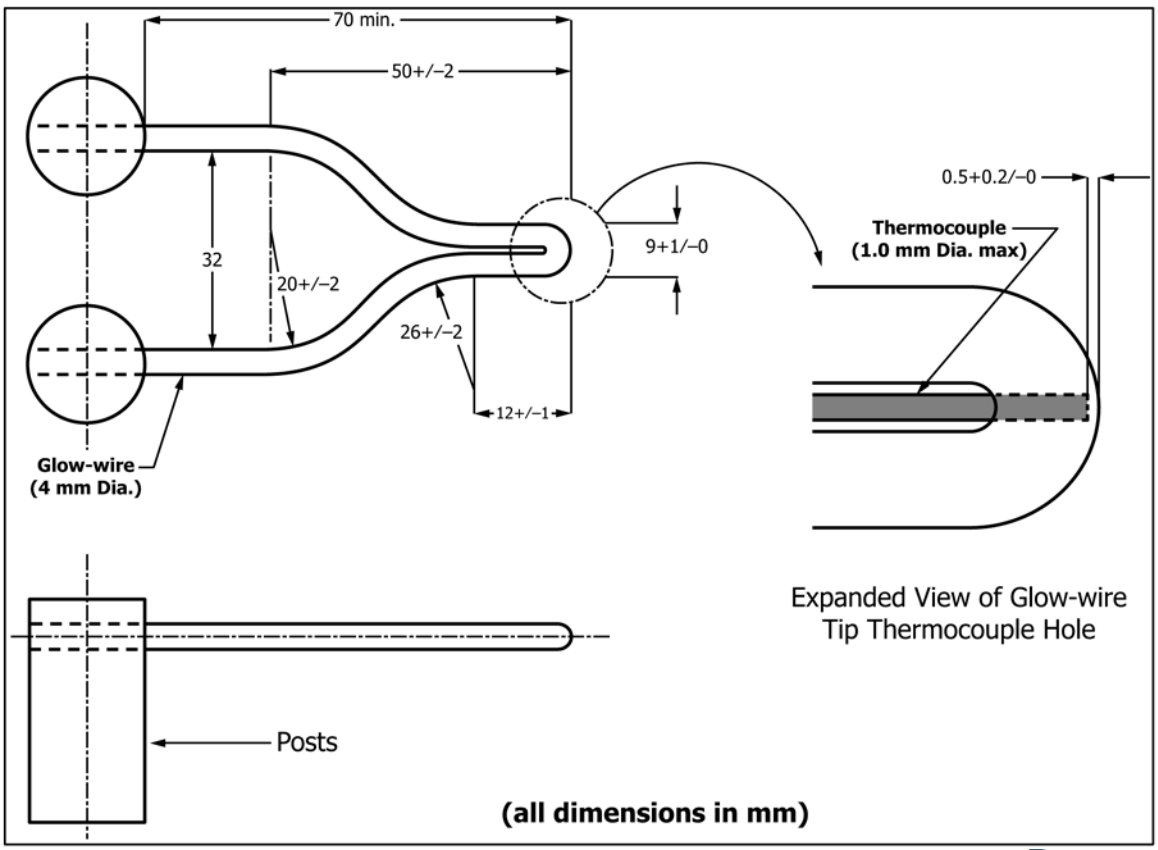

FIG. 1 Glow Wire Apparatus from Test Method D6194, Including Positioning of the Thermocouple

AVA Documents
Document Sharing Hub

Full document details: ASTM E3020-22

a metal that will allow the thermocouple to perform its function in air at sheath temperatures of at least 1050 °C. The thermocouple is arranged in a pocket hole, drilled in the tip of the glow-wire, as shown in Fig. 1. The thermal contact between the walls of the bored hole in the glow-wire is maintained by pinning the sheathed thermocouple in place. The thermocouple follows the movement of the tip of the glow-wire resulting from elongation caused by thermal heating. A temperature indicator for Type K thermocouples capable of reading up to 1000 °C is used. The supply circuit needs to be capable of supplying up to 150 A at 2.1V, with smooth continuous adjustment of voltage to provide the required current as needed to maintain the desired glow-wire tip temperature.

8.1.5 The test apparatus holds the glow-wire in a horizontal plane and moves it against the vertical test specimen, maintaining a force of 1.0 ± 0.2 N over a distance of at least 7 mm (see Fig. 2). Similar equipment is described in IEC 60695-2-10 and IEC 60695-2-11.

8.2 *Hot Wires:*

8.2.1 This ignition source is an electrically heated hot wire that simulates the overloading of an electrically live material in direct contact with a test specimen. A schematic of the apparatus is shown in Fig. 3 (Test Method D3874).

8.2.2 The heater wire itself consists of a loop of Nichrome (nickel/chromium) (80 % nickel and 20 % chromium, iron-free) wire, 0.05 mm in nominal diameter. The wire has a nominal cold resistance of 5.28 Ω/m and has a length-to-mass ratio of 580 m/kg.

8.2.3 The supply circuit, used as a means for electrically energizing the heater wire, needs to have the following capabilities.

8.2.3.1 The circuit has sufficient capacity to maintain a continuous linear 50 to 60 Hz power density of at least 0.31 W/mm over the length of the heater wire at or near unity power factor. With the supply circuit operating at a current of 60 A with a voltage of 1.5 V, the approximate power density is 0.3 W/mm.

8.2.3.2 There needs to be a means for adjustment of voltage to achieve the desired current and to provide a smooth and continuous adjustment of the power level.

8.2.3.3 There needs to be a means of measuring the power to within ±2 %.

8.2.3.4 The test circuit is provided with an easily actuated on-off switch for the test power, and timers to record the duration of the application of test power.

8.2.4 Each test uses a length of previously calibrated wire measuring approximately 250 mm. Before testing, each straight length of wire is annealed by energizing the wire to dissipate 0.26 W/mm of length for 8 to 12 s to relieve the internal stresses within the wire. Similar equipment is described in IEC/TS 60695-2-20.

8.3 *Conical Radiant Ignition Sources:*

8.3.1 *Cone Calorimeter*—This ignition source is described in Test Method E1354 and in ISO 5660-1. The ignition source consists essentially of the following components: a conical radiant electric heater, capable of horizontal or vertical orientation, a temperature controller, a radiation shield, test specimen holders (different for the two orientations), and an electric ignition spark plug. The test specimen is 100 × 100 mm and the heat flux ranges up to 100 kW/m^2, with a spark igniter and no pilot flame. A cross section through the heater is shown

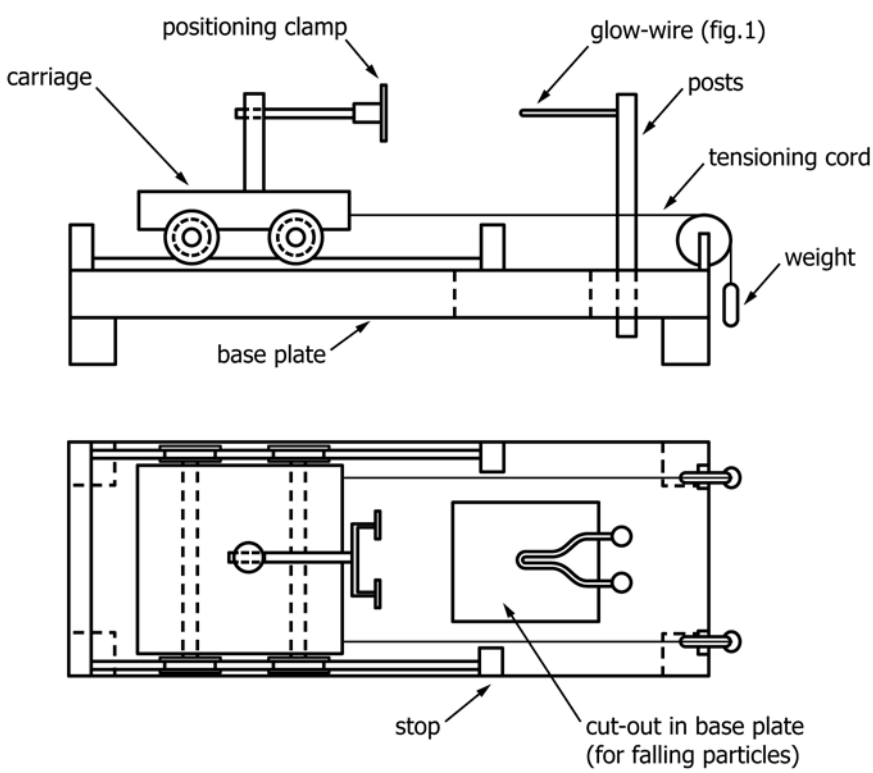

FIG. 2 Example of Glow Wire Apparatus from Test Method D6194

Documents
Document Sharing Hub

Full document details: ASTM E3020-22

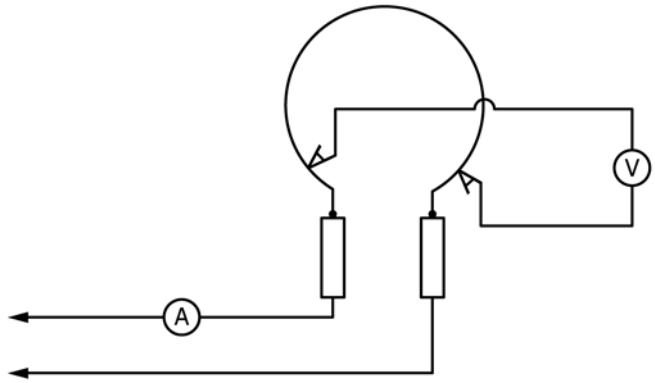

FIG. 3 Schematic of Hot Wire Apparatus from Test Method D3874

in Fig. 4, and exploded views of horizontal and vertical orientations are shown in Fig. 5 and Fig. 6.

8.3.1.1 *Conical Heater:*

(1) The active element of the heater consists of an electrical heater rod, rated at 5000 W at 240 V, tightly wound into the shape of a truncated cone (Fig. 5 and Fig. 6). The heater is encased on the outside with a double-wall stainless steel cone, packed with a refractory fiber material of approximately 100 kg/m^3 density.

(2) The heater is hinged so it can be swung into either a horizontal or a vertical orientation. The heater needs to be capable of producing irradiances on the surface of the test specimen of up to 100 kW/m^2. The irradiance needs to be uniform within the central 50 mm by 50 mm area of the test specimen to within ±2 % in the horizontal orientation and to within ±10 % in the vertical orientation. The geometry of the heater is critical and so are the dimensions on Fig. 4.

(3) The irradiance from the heater needs to be capable of being held at a preset level by means of a temperature controller and three type K stainless steel sheathed thermocouples, symmetrically disposed and in contact with, but not welded to, the heater element (see Fig. 4). The thermocouples are of equal length and wired in parallel to the temperature controller.

8.3.1.2 *Temperature Controller:*

(1) The temperature controller for the heater needs to be capable of holding the element temperature steady to within ±2 °C. A suitable system is a 3-term controller (proportional, integral, and derivative) and a thyristor unit capable of switching currents up to 25 A at 240 V.

(2) The controller needs to have a temperature input range of 0 to 1000 °C; a set scale capable of being read to 2 °C or better; and automatic cold junction compensation. The controller is equipped with a safety feature such that in the event of an open circuit in the thermocouple line, it will cause the temperature to fall to near the bottom of its range.

(3) The thyristor unit is of the zero crossing and not of the phase angle type.

(4) The heater temperature is monitored by a meter capable of being read to ±2 °C, or better. It is permitted to be incorporated into the temperature controller.

8.3.1.3 *Test Specimen Holder:*

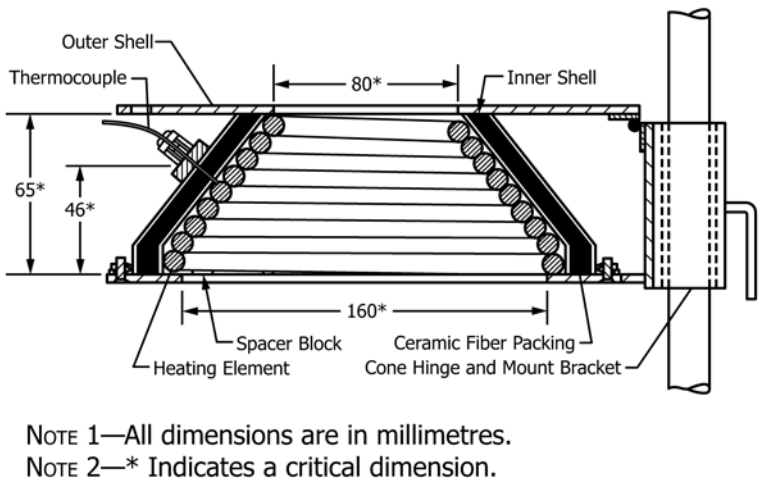

NOTE 1—All dimensions are in millmetres.
NOTE 2—* indicates a critical dimension.

FIG. 4 Cross-Section View of Cone Calorimeter Cone through the Heater (Test Method E1354)

AVA Documents
Document Sharing Hub

Full document details: ASTM E3020-22

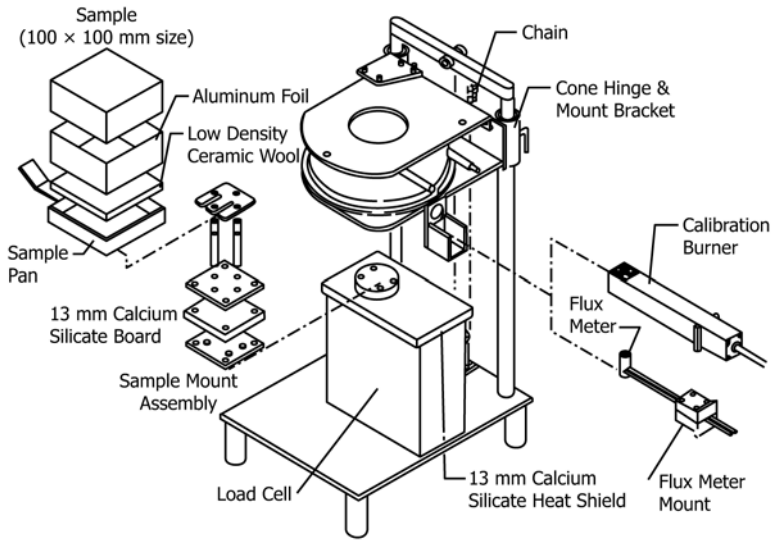

FIG. 5 Exploded View of Cone Calorimeter Ignition System, Horizontal Orientation (Test Method E1354)

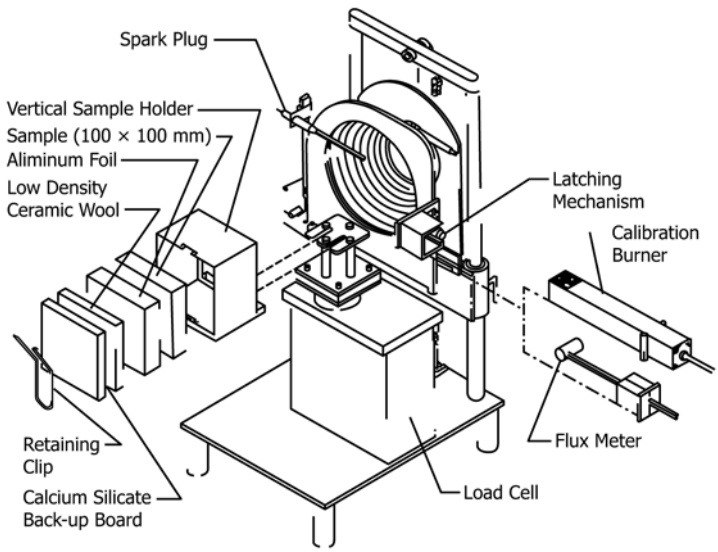

FIG. 6 Exploded View of Cone Calorimeter Ignition System, Vertical Orientation (Test Method E1354)

(1) Horizontal Test Specimen Holder—The bottom of the horizontal test specimen holder is lined with a layer of low density (nominal density 65 kg/m^3) refractory fiber blanket with a thickness of at least 13 mm. The distance between the bottom surface of the cone heater and the top of the test specimen is adjusted to be 25 mm.

(2) Vertical Test Specimen Holder—The vertical test specimen holder includes a small drip tray to contain a limited amount of molten material. A test specimen is installed in the vertical test specimen holder by backing it with a layer of refractory fiber blanket (nominal density 65 kg/m^3), the thickness of which depends on test specimen thickness, but needs to be at least 13 mm thick. A layer of rigid, ceramic fiber millboard is placed behind the fiber blanket layer. The millboard thickness is such that the entire assembly is rigidly bound together once the retaining spring clip is inserted behind the millboard. In the vertical orientation, the cone heater height is set so the center lines up with the test specimen center.

8.3.1.4 *Radiation Shield*—The cone heater is provided with a removable radiation shield to protect the test specimen from the heat flux prior to the start of a test. The shield is made of noncombustible material with a total thickness not to exceed 12 mm. The shield is one of the following:

(a) A water-cooled shield coated with a durable matte black finish of surface emissivity, $e = 0.95 \pm 0.05$.

(b) A shield that is not water-cooled but is provided with a metallic reflective top surface to minimize radiation transfer.

(c) A shield that is not water-cooled but is provided with a ceramic, non-metallic, surface that minimizes radiation transfer to the test specimen surface. The shield is equipped with a handle or other suitable means for quick insertion and removal. The cone heater base plate is equipped with the means for holding the shield in position and allowing its easy and quick removal.

8.3.1.5 *Ignition Circuit*—External ignition is accomplished by a 10-kV discharge across a 3 mm spark gap located 13 mm

AVA Documents
Document Sharing Hub

Full document details: ASTM E3020-22

above the center of the test specimen in the horizontal location; in the vertical orientation, the gap is located in the test specimen face plane and 5 mm above the top of the holder. A suitable power source is a transformer designed for spark-ignition use or a spark generator. The high voltage connections to the spark electrodes are not grounded to the chassis in order to minimize interference with the data-transmission lines. For testing with electric spark ignition, spark discharge needs to be continuously operating at 50 to 60 Hz until sustained flaming is achieved. The ignitor needs to be removed when sustained flaming is achieved.

8.3.1.6 *Ignition Timer*—The timing device for measuring time to sustained flaming needs to be capable of recording elapsed time to the nearest second and needs to be accurate to within 1 s in 1 h.

8.3.2 *Conical Smoke Chamber Heater*—This ignition source is described in Test Method E1995, in NFPA 270 and in ISO 5659-2. The ignition source consists essentially of the following components: a conical radiant electric heater, a test specimen holder, a radiation shield, and a pilot burner. The test specimen is 75 mm × 75 mm and the heat flux range is 25 or 50 kW/m^2, either with or without an external pilot flame. A cross-section through the heater is shown in Fig. 7.

NOTE 1—This ignition source is different from the one in the traditional smoke chamber described in Test Method E662.

8.3.2.1 *Conical Heater:*

(1) The active element of the heater consists of an electrical heater rod, rated at 450 W at 240 V, tightly wound into the shape of a truncated cone. The heater needs to be encased on the outside with a double-wall stainless steel cone, packed with a refractory fiber material of approximately 100 kg/m^3 density.

(2) The heater needs to be capable of producing irradiances on the surface of the test specimen of 10 to 50 kW/m^2, at the center of the surface of the test specimen. The irradiance needs to also be determined at a position of 25 mm ± 2 mm to each side of the test specimen center, and the irradiance at these two positions needs to be not less than 85 %, and not more than 115 %, of the irradiance at the center of the test specimen.

(3) The irradiance from the heater needs to be capable of being held at a preset level (25 and 50 kW/m^2) by means of a temperature controller and three type K stainless steel sheathed thermocouples, symmetrically disposed and in contact with, but not welded to, the heater element. The thermocouples need to be of equal length and wired in parallel to the temperature controller.

8.3.2.2 *Temperature Controller:*

(1) The temperature controller for the heater needs to be capable of holding the element temperature steady to within ±2 °C. A suitable system is a 3-term controller (proportional, integral, and derivative) and a thyristor unit capable of switching currents up to 25 A at 240 V.

(2) The controller needs to have a temperature input range of 0 to 1000 °C; a set scale capable of being read to 2 °C or better; and automatic cold junction compensation. The controller needs to be equipped with a safety feature such that in the event of an open circuit in the thermocouple line, it will cause the temperature to fall to near the bottom of its range.

(3) The thyristor unit needs to be of the zero crossing and not of the phase angle type.

(4) The cone heater temperature needs to be monitored by a meter capable of being read to ±2 °C, or better. It is typically incorporated into the temperature controller.

8.3.2.3 The cone heater needs to be secured from the vertical rods of the support framework and located so that the lower rim of the cone heater is 25 mm ± 1 mm above the upper surface of the test specimen.

8.3.2.4 *Radiation Shield*—The cone heater needs to be provided with a removable radiation shield to protect the test specimen from the irradiance prior to the start of the test. The radiation shield needs to be made of a noncombustible material with a total thickness not to exceed 12 mm. The radiation shield needs to comply with either 8.3.2.4*(1)* or 8.3.2.4*(2)* and needs to be kept in place for a maximum period of 10 s.

(1) A water-cooled radiation shield coated with a durable matte black finish of surface emissivity e = 0.95 ± 0.05.

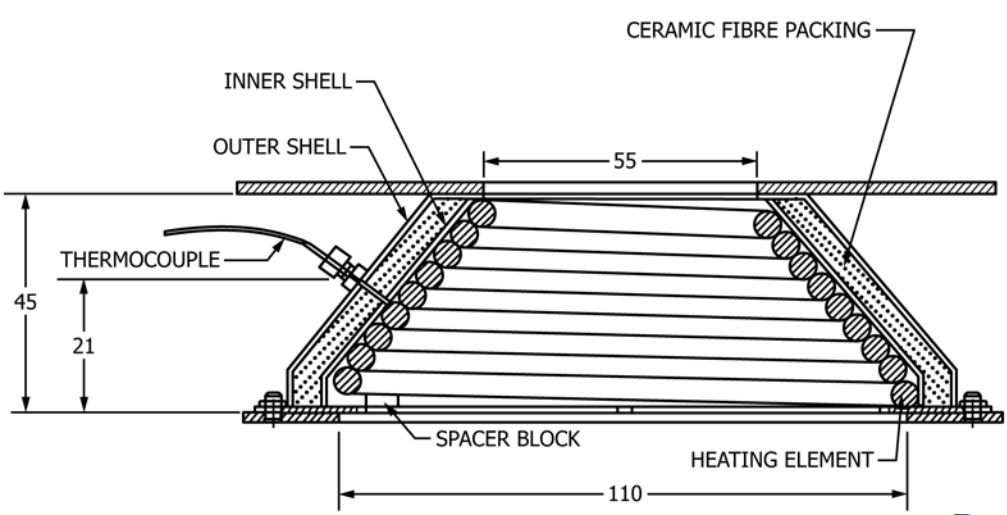

FIG. 7 Cross-Section View of Smoke Chamber Cone Heater (dimensions in mm) (Test Method E1995)

AVA Documents
Document Sharing Hub

Full document details: ASTM E3020-22

(2) A radiation shield with a reflective top surface in order to minimize radiation transfer but not water-cooled.

(3) The radiation shield needs to be equipped with a handle or other suitable means for quick insertion and removal. The cone heater base plate needs to be equipped with the means for holding the radiation shield in position and allowing its easy and quick removal.

8.3.2.5 *Pilot Burner*—The flame from the associated required single-flame burner needs to have a length of 30 mm ± 5 mm and needs to be positioned horizontally 10 mm ± 1 mm above the top face of the test specimen. The color of the flame needs to be blue, with a yellow tip. Ensure that the tip of the burner is aligned with the edge of the test specimen, as shown in Fig. 8.

8.3.2.6 *Spark Igniter*—A small spark ignition device is placed next to the outlet tube of the burner, for the operator to cause reignition of the flame without opening the door of the chamber. A suitable system is a spark plug with a 3 mm gap, powered from a 10 kV transformer. A suitable transformer is of a type specifically designed for spark-ignition use, with an isolated (ungrounded) secondary to minimize interference with the data-transmission lines. An acceptable electrode length and spark plug location is such that the spark gap is located 13 mm above the test specimen, close to the pilot burner.

8.3.3 *Periodic Flaming Ignition Test:*

8.3.3.1 This ignition source is described in ISO 5657. The ignition source is a conical radiant heater similar to those described in 8.3.1 and in 8.3.2 but with somewhat different characteristics, both with respect to the heater itself and with respect to the test specimen. The test specimen is 165 mm × 165 mm and the heat flux range is 10 to 50 kW/m^2. Details are shown in Fig. 9.

8.3.3.2 The active element of the heater consists of an electrical heater rod, rated at 3000 W at 240 V, tightly wound into the shape of a truncated cone. The heater is encased on the outside with a double-wall stainless steel cone, packed with a refractory fiber material of approximately 100 kg/m^3 density.

(1) The heater needs to be capable of producing irradiances on the surface of the test specimen of 10 to 50 kW/m^2, at the aperture of a masking plate and in a reference plane coinciding with the underside of the masking plate. The distribution of the irradiance provided by the heater at the reference plane needs to be such that: *(a)* the variation of the irradiance within a circle of 50 mm diameter, drawn from the center of the masking plate aperture, needs to be not more than ± 3% of that at the center and that *(b)* the variation of the irradiance within a circle of 100 mm diameter, drawn from the center of the masking plate aperture, needs to be not more than ±5 % of that at the center.

(2) The irradiance from the heater needs to be capable of being held at a preset level by means of a temperature controller and three type K stainless steel sheathed thermocouples, symmetrically disposed and in contact with, but not welded to, the heater element. The thermocouples need to be of equal length and wired in parallel to the temperature controller.

8.3.3.3 *Pilot Flame*—The apparatus needs to be provided with a pilot flame and a secondary ignition source.

(1) The pilot flame stainless steel nozzle tube needs to be fed with a mixture of propane and air that is achieved by regulating the propane flow rate to 19 – 20 mL/min and the air flow rate to 160 – 180 mL/min. The flow rates are fed directly into the pilot flame from the flow meters.

(2) The apparatus needs to have a mechanism capable of bringing the pilot flame from its "off" position outside and above the cone heater (at a height of 10 mm ± 1 mm above the underside of the masking plate) to its "test" position within the cone (at a distance of 10 mm above the test specimen), through the cone and through the aperture in the masking plate. When the flame is in the "off" position, it issues horizontally over the center point of the aperture in the masking plate and perpendicular to the plane of the movement of the pilot arm, with the center of the orifice in the nozzle positioned at the indicated height. The mechanism needs to have the pilot flame move every 4 s (+ 0.4 – 0 s) from the "off" position to the test position in no more than 0.5 s, stay there for 1 s (+ 0.1 – 0 s) and return in a time of no more than 0.5 s.

(3) The secondary ignition source needs to be one of the following: a propane gas flame 15 mm long, from a nozzle with an internal diameter of 1 mm – 2 mm (50 W in heat output); a hot wire; or a spark igniter.

(4) The dipping of the pilot flame needs to be continuous until ignition of the test specimen.

8.4 *Other Radiant Ignition Sources:*

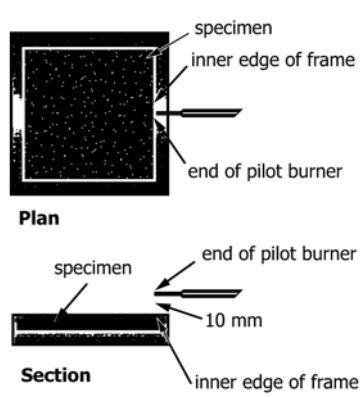

FIG. 8 Location of Pilot Burner for Smoke Chamber Cone Heater (Test Method E1995)

Documents
Document Sharing Hub
Full document details: ASTM E3020-22