This international standard was developed in accordance with internationally recognized principles on standardization established in the Decision on Principles for the Development of International Standards, Guides and Recommendations issued by the World Trade Organization Technical Barriers to Trade (TBT) Committee.

Designation: E3367 – 23

An American National Standard

Standard Test Method for Determining the Combustion Behavior of Layered Assemblies using a Cone Calorimeter[1]

This standard is issued under the fixed designation E3367; the number immediately following the designation indicates the year of original adoption or, in the case of revision, the year of last revision. A number in parentheses indicates the year of last reapproval. A superscript epsilon (ε) indicates an editorial change since the last revision or reapproval.

1. Scope

1.1 This test method covers a means to measure the response of materials, products or layered assemblies when exposed to controlled levels of radiant heating, with or without an external ignitor.

1.2 This test method provides an alternative test configuration to Test Method E1354 to measure the ignitability, heat release rate (including peak heat release rate and total heat released), mass loss rate, effective heat of combustion and visible smoke development.

1.3 Compared to Test Method E1354, this test method adds the ability to measure the time at which the following phenomena occur: (*1*) appearance of liquid products (generated by either melting or pyrolysis of the specimen) underneath the sample, dripping and generation of a liquid pool underneath the specimen, (*2*) flaming over the bottom surface of the specimen and liquid pool, and; (*3*) burn-through.

1.4 This test method is not intended to measure the response of products comprised of noncombustible cores.

1.5 The top side of the specimens shall be exposed to an initial test heat flux of 0 kW/m^2 to 75 kW/m^2. External ignition, if any, shall be by electric spark.

1.6 This test method has been developed for use to evaluate the fire test response characteristics of materials, products or layered assemblies. It is potentially useful for mathematical modeling, material or product design purposes, and research and development.

1.7 This test method is used to measure and describe the response of assemblies to heat and flame under controlled conditions but does not by itself incorporate all factors required for fire hazard or fire risk assessment of an end-use product under actual fire conditions.

1.8 This test method is used to measure the effect of fire barriers on the burning behavior of materials, products or layered assemblies to a range of radiant heat intensities but does not account for all factors that affect the performance of fire barriers at full scale.

1.9 The values stated in SI units are to be regarded as standard. No other units of measurement are included in this standard.

1.10 *This standard does not purport to address all of the safety concerns, if any, associated with its use. It is the responsibility of the user of this standard to establish appropriate safety, health, and environmental practices and determine the applicability of regulatory limitations prior to use.* For specific hazard statements, refer to Section 7.1.

1.11 *Fire testing is inherently hazardous. Adequate safeguards for personnel and property shall be employed in conducting these tests.*

1.12 *This international standard was developed in accordance with internationally recognized principles on standardization established in the Decision on Principles for the Development of International Standards, Guides and Recommendations issued by the World Trade Organization Technical Barriers to Trade (TBT) Committee.*

2. Referenced Documents

2.1 *ASTM Standards:*[2]

D123 Terminology Relating to Textiles

D4391 Terminology Relating to The Burning Behavior of Textiles

E176 Terminology of Fire Standards

E1354 Test Method for Heat and Visible Smoke Release Rates for Materials and Products Using an Oxygen Consumption Calorimeter

3. Terminology

3.1 *Definitions:*

3.1.1 For definitions of terms related to fire, refer to Terminology E176.

[1] This test method is under the jurisdiction of ASTM Committee E05 on Fire Standards and is the direct responsibility of Subcommittee E05.21 on Smoke and Combustion Products.

Current edition approved June 15, 2023. Published July 2023. DOI: 10.1520/E3367-23.

[2] For referenced ASTM standards, visit the ASTM website, www.astm.org, or contact ASTM Customer Service at service@astm.org. For *Annual Book of ASTM Standards* volume information, refer to the standard's Document Summary page on the ASTM website.

Copyright © ASTM International, 100 Barr Harbor Drive, PO Box C700, West Conshohocken, PA 19428-2959. United States

Documents
Document Sharing Hub

Full document details: ASTM E3367-23

3.1.2 For definitions of terms related to textiles, refer to Terminology D123.

3.1.3 For definitions of terms related to the burning behavior of textiles, refer to Terminology D4391.

3.1.4 *sustained flaming, n*—flame on or over the surface of a test specimen that lasts longer than a defined period of time.

3.2 *Definitions:*

3.2.1 *bottom ignition, n*—a process leading to sustained flaming underneath the specimen.

3.2.2 *bottom layered materials, n*—optional bottom portion of the specimen, made of a single or multiple layers (such as metal foils, textiles and polymeric films), which covers the bottom surface of the core.

3.2.2.1 *Discussion*—Top and bottom layered materials can act as fire barriers protecting the core; they are sealed to the specimen holder in order to prevent pyrolyzate leaking.

3.2.3 *burn-through, n*—a process leading to the formation of a hole connecting the top to the bottom of the specimen.

3.2.4 *core, n*—main component and fuel source of the specimen.

3.2.4.1 *Discussion*—The specimen holder in the Cube Test is designed such that the lateral surface of the core is surrounded by a thermal insulator and a metal liner; this promotes the formation of a one-dimensional heat/mass transfer scenario where heat/mass transfer occurs in a direction perpendicular to the top and bottom surfaces of the core.

3.2.5 *dripping, n*—a process by which liquid products drips and accumulate underneath the specimen to form a pool.

3.2.6 *fire barrier, n*—layer of a material or a product used to prevent or decrease the burning rate of the core by inhibiting heat and mass transfer.

3.2.7 *layered assembly, n*—product comprised of one or multiple-layers including a core and, optionally, top layered materials and bottom layered materials.

3.2.8 *liquid products, n*—flammable liquid material generated by melting or pyrolysis of the core.

3.2.9 *pool ignition, n*—a process by which liquid products in a pool are ignited.

3.2.10 *release of liquid products or "wetting", n*—a process by which liquid products become visible on the bottom surface of the specimen.

3.2.10.1 *Discussion*—In presence of bottom layered materials which are permeable to liquid products, wetting can be revealed by visible stains due to liquid products percolating through the bottom layered materials.

3.2.11 *top layered materials, n*—optional portion of the specimen, made of a single or multiple layers (such as metal foils, textiles and polymeric films), which covers the top surface of the core.

4. Summary of Test Method

4.1 This test method measures the response of materials, products or layered assemblies to a range of radiant heat intensities with or without an ignition source.

4.2 This test provides means to measure time to wetting, time to dripping, time to bottom ignition, time to pool ignition, time to burn-through as well as time-resolved heat release rate and mass loss rate, peak heat release rate, total heat released, ignitability, and other fire-test-response characteristics as a function of the initial test heat flux.

4.3 The test specimen is intended to be a representative cross-section of a product or layered assembly. The specimen includes a core, constituting the main component and fuel source of the specimen and, optionally, top layered materials and bottom layered materials. The top and bottom layered materials can act as fire barriers protecting the core.

4.4 This test method is not intended for products or assemblies comprised of cores that comply with the noncombustible requirements of Test Method E1354.

4.5 The sides of the core shall be insulated and sealed to minimize loss of heat and/or of products of decomposition.

4.6 The optional top and bottom layered materials shall be sealed along their edge by the sample holder in order to inhibit leaks of pyrolizates.

4.6.1 Sealing and insulating the sides of the specimens promote, as much as possible (perfectly adiabatic conditions at the specimen sides, complete prevention of leaks, and total uniformity in the incident heat-flux are unfeasible), a one-dimensional heat/mass transfer scenario where heat/mass transfer occurs in a direction perpendicular to the top surface of the specimen.

4.7 The optional top and bottom layered materials shall be constrained along their edge by the sample holder in order to induce stress in shrinkage-prone layered materials.

4.8 The top surface of the specimen is exposed to initial test heat fluxes in the range of 0 kW/m^2 to 75 kW/m^2. External ignition, if any, shall be by means of an electric spark. For exploratory testing, the initial test heat flux shall be of 50 kW/m^2. When multiple initial test heat fluxes are to be employed, in the absence of further specifications, values of 35 kW/m^2, 50 kW/m^2, and 75 kW/m^2 shall be used.

4.9 For this test method, sustained flaming shall be considered to be a flame on or over the surface of a test specimen that lasts longer than 4 s.

5. Significance and Use

5.1 Flammable liquid products can be generated by either pyrolysis or melting of polymers. Materials that generate flammable liquid products include thermoplastic polymers (for example, polyolefins) and thermosetting polymers (for example, polyurea and flexible polyurethane), which degrade to yield, in part, liquid pyrolyzates when pyrolyzing. Such liquid material can accumulate underneath a burning item and eventually ignite to form a pool fire, generally leading to a sharp increase in heat release rate and increase in fire hazard.

5.2 Fire barriers are able to hinder the formation of a pool fire by delaying the generation and the release of flammable liquid products.

AVA Documents
Document Sharing Hub

Full document details: ASTM E3367-23

5.3 This test method is intended to simulate the combustion of a central (that is, away from the edges) cross-section of a single material or a multi-layered product with ignition occurring on the top surface of the specimen.

5.4 The test method is designed to assess whether liquid products are released during the test and the time at which they are released.

5.5 The test method is designed to assess whether dripping occurs during the test and the time at which it occurs.

5.6 The test method is designed to assess whether bottom ignition occurs during the test and the time at which it occurs.

5.7 The test method is designed to assess whether pool ignition occurs during the test and the time at which it occurs.

5.8 The test method is designed to assess whether burn-through occurs during the test and the time at which it occurs.

5.9 The test measures heat release rate, mass loss rate and the resulting smoke obscuration as a result of exposing the specimen to a radiant heat source.

5.10 The test method assesses whether the components of the specimen under examination demonstrates any of the following behaviors: breaking open, charring, appearance of superficial cracks without complete separation of the parts, melting, or shrinkage.

5.11 The test method does not assess flame spread and does not account for other factors such as aging, wear and tear of a product or vandalism.

6. Apparatus

6.1 This test method employs the same instrumentation (oxygen consumption calorimeter) described in Test Method E1354 except for the specimen holder. The orientation of the conical heater is horizontal.

6.2 The specimen holder for this test method shall consist of the following main components: top retainer frame, liner, liner insulation, bottom retainer frame, sample stage, catch pan, screws with compression springs, and ceramic felt.

6.3 An optional top wire grid is used to prevent contact between the top surface of the specimen and the spark igniter.

6.4 An exploded view of the specimen holder is shown in Fig. 1. Views with dimensions and materials adopted for the top retainer frame, bottom retainer frame, liner, sample stage and wire grid are provided in Fig. 2, Fig. 3, Fig. 4, Fig. 5, Fig. 6, and Fig. 7, respectively.

6.5 All dimensions given in the figures that are followed by an asterisk are mandatory and shall be followed within nominal tolerances of ±1 mm, unless otherwise specified.

6.6 The height of the liner shall be 25 mm to 91 mm, and it is intended to match the thickness of the end-use product. In the absence of further specifications, a liner height of either 25 mm ± 1 mm, 51 mm ± 1 mm, or 91 mm ± 1 mm, whichever is closest to the thickness of the end-use product, shall be used.

6.7 Fig. 1 shows screws inserted into compression springs and then into a spacer. The screws shall be made of stainless steel and shall be type #10-32. The length of the screw shall be $(h + t + 5) \pm 5$ mm, where h is the height of the selected liner, t is the total thickness of the top layered materials and bottom layered materials after being compressed in the specimen holder.

6.8 The compression springs shall be made of stainless steel, 25 mm ± 1 mm long, with a spring constant of 1.28 N/m ± 10 %. The spacer shall be a stainless steel tube with an outside diameter of 10.0 mm ± 0.5 mm, a wall thickness of 0.25 mm ± 0.05 mm and a length of 15.0 mm ± 0.3 mm. Washers shall be flat, type #10 and made of stainless steel.

6.9 Details of the remainder components of the cone calorimeter apparatus are found in the apparatus section of Test Method E1354.

7. Hazards

7.1 This test procedure involves high temperatures and combustion processes. Therefore, hazards exist for burns, ignition of extraneous objects or clothing, and for inhalation of combustion products. The operator shall use protective gloves for insertion and removal of test specimens. Neither the cone heater nor the associated fixtures shall be touched while hot, except with the use of protective gloves, and eye protection shall be worn.

7.2 The exhaust system shall be checked for proper operation before testing and must discharge into a building exhaust system with adequate capacity. Provision shall be made for collecting and venting any combustion products that are not collected by the normal exhaust system of the apparatus.

8. Sampling and Test Specimen Preparation

8.1 *Size and Preparation:*

8.1.1 For each test specimen, one core shall be used. The test specimen shall be permitted to consist, additionally, of one set of top layered materials and one set of bottom layered materials.

8.1.2 A minimum of three identical test specimens shall be prepared.

8.1.3 Each optional layered material, if used, shall be 125 mm ± 2 mm by 125 mm ± 2 mm.

8.1.4 If the core is composed of rigid non-compressible materials, the core shall be a cuboid with a length of 100 mm ± 2 mm, a width of 100 mm ± 2 mm and a thickness between 25 mm and 91 mm.

8.1.5 If the core is composed of compressible materials like loose fibers, the mass of the core shall be adjusted to match the density in the end-use product with the selected liner thickness.

8.1.6 If the core is composed of compressible materials like a flexible foam, it shall be a cuboid with a length of 108 mm ± 2 mm, a width of 108 mm ± 2 mm and a thickness between 25 mm and 108 mm.

8.1.7 A 112 mm ± 2 mm by 112 mm ± 2 mm piece of ceramic felt shall be placed inside the center cavity of the sample stage. The ceramic felt shall have a thickness of 3 mm ± 0.5 mm, density of 130 kg/m^3 to 190 kg/m^3 and thermal conductivity of 0.05 W/m·K to 0.07 W/m·K at 260 ºC.

8.1.8 A catch pan 112 mm ± 2 mm by 112 mm ± 2 mm in size shall be prepared from aluminum foil and placed over the

AVA Documents
Document Sharing Hub

Full document details: ASTM E3367-23

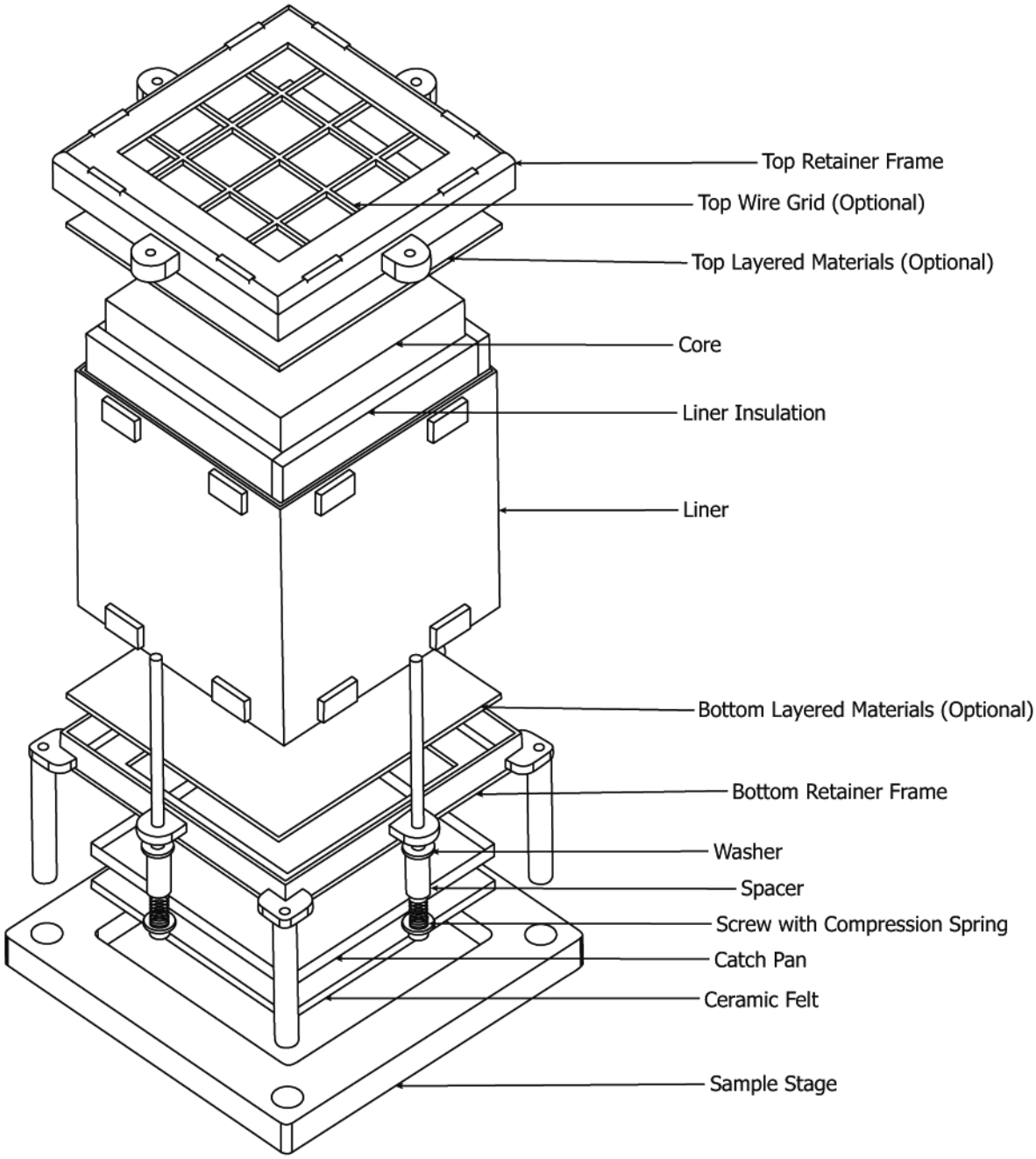

NOTE 1—All dimensions are in millimeters.

FIG. 1 Exploded View of Specimen Holder with a Selected Liner Height of 91 mm ± 1 mm

ceramic felt. Foil thickness shall be 0.01 mm to 0.02 mm. A catch pan depth of 10 mm ± 1 mm is recommended but it can be increased for specimens in which the liquid products overflow the catch pan.

8.1.9 A mounting plate shall be used to assemble the specimen components when a flexible core material is used. The plate shall have dimensions of 100 mm ± 2 mm by 100 mm ± 2 mm and a thickness of at least 3 mm.

8.1.9.1 The mounting plate helps minimize sagging of the bottom layered material when assembling the specimen with a flexible core.

8.1.10 The liner insulation shall be constructed by cutting four ceramic panels from a ceramic board. The ceramic panels shall have dimensions of 107 mm ± 1 mm by (h – 2) ± 1 mm, where h is the height of the selected liner. The ceramic board shall have a nominal thickness of 6.3 mm to 6.4 mm, density of 250 kg/m^3 to 260 kg/m^3 and a thermal conductivity of 0.04 W/m·K to 0.06 W/m·K at 260 ºC.

8.1.11 The sample holder and specimen assembly procedure, which is described below, starts with the top component (top retainer frame) and ends with the bottom component (sample stage) (see Fig. 1).

AVA Documents
Document Sharing Hub

Full document details: ASTM E3367-23

Exterior View of Part

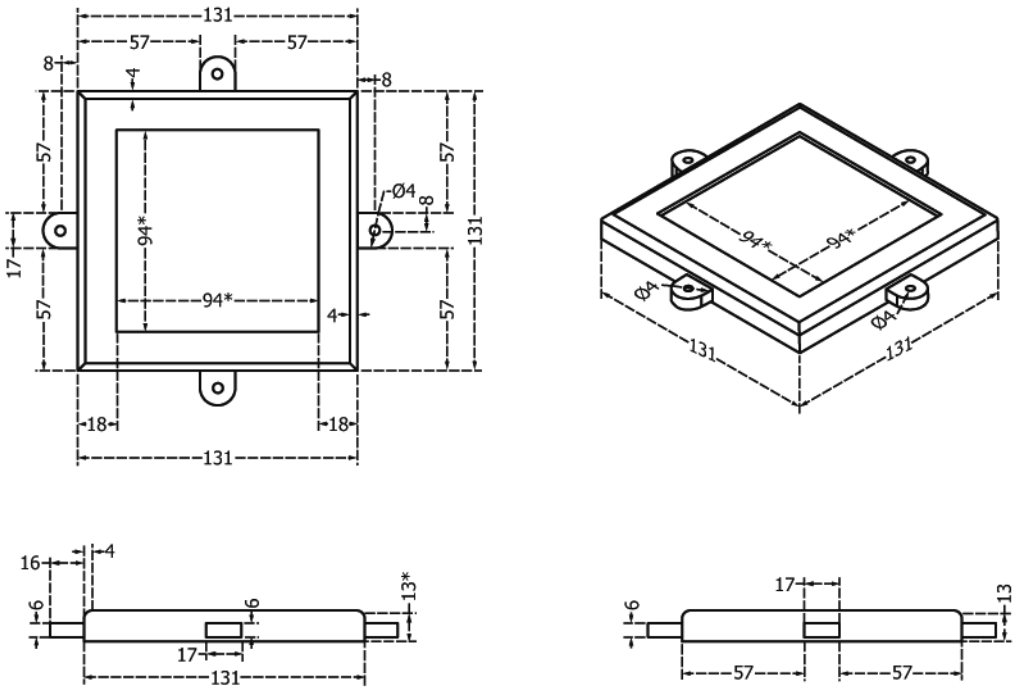

Interior View of Part

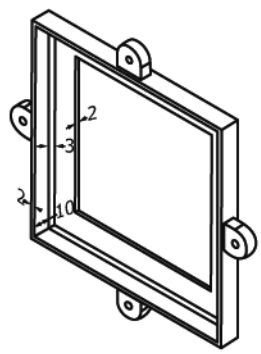

NOTE 1—All dimensions are in millimeters.

FIG. 2 Top Retainer Frame (Stainless Steel)

8.1.12 Figures detailing the assembly procedure for specimens with a non-compressible core or a compressible core are shown in Annex A1.

8.1.13 Place the top retainer frame upside-down on the bench.

8.1.14 If an optional wire grid is used, center the wire grid inside the top retainer frame.

8.1.15 If an optional top layered material is used, place the top layered material inside the top retainer.

8.1.16 If multiple top layered materials are used, stack them inside the top retainer starting from the top layered material that shall be exposed on the top surface of the specimen, and ending with the top layered material that shall be in contact with the core.

8.1.17 Assemble the four ceramic panels to form the liner insulation inside the liner as shown in Fig. 1. Slide and center the liner insulation inside the liner.

8.1.18 Place the liner and liner insulation assembly over the top retainer frame. Center the liner over the top retainer frame.

8.1.19 Place the core inside the cavity formed by the liner insulation. If the core is a compressible material like a flexible foam, the upward-facing side of the core shall be aligned with the upward-facing edge of the liner, and the opposite side of the core shall lean about 20 mm to 25 mm from the downward-facing edge of the liner (see Fig. A1.19).

8.1.20 If an optional bottom layered material is used, place the bottom layered material on top of the core. Align the corners of the bottom layered material with the corners of the

AVA Documents
Document Sharing Hub

Full document details: ASTM E3367-23

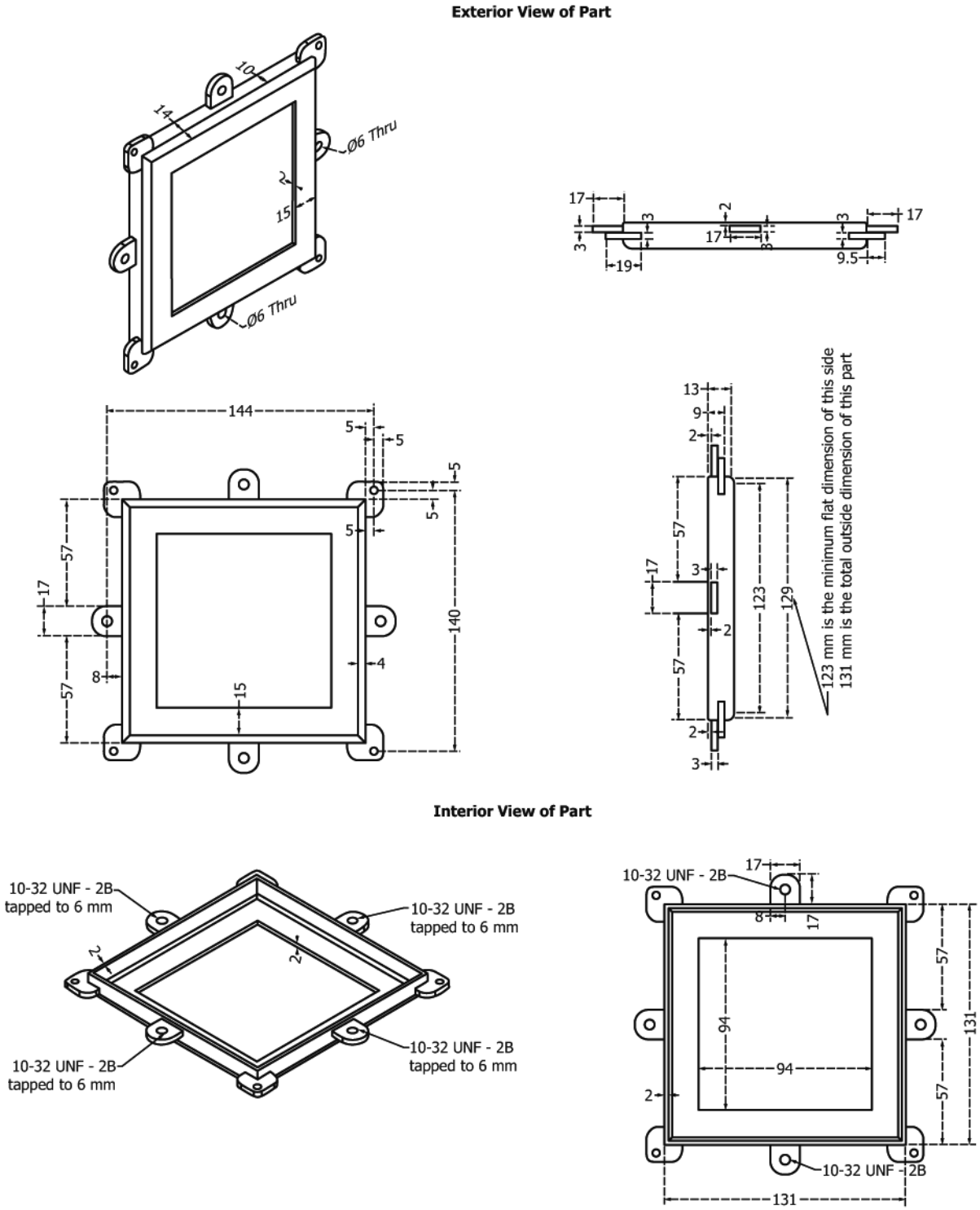

NOTE 1—All dimensions are in millimeters.

FIG. 3 Bottom Retainer Frame – Par 1 (Stainless Steel)

underlying top retainer frame and center the bottom layered material over the liner.

Documents
Document Sharing Hub
Full document details: ASTM E3367-23

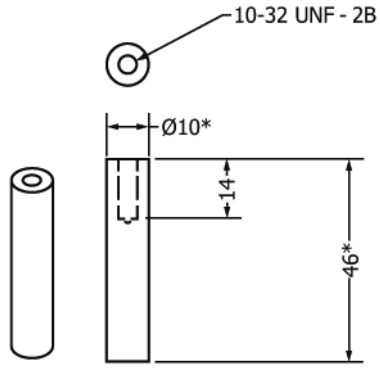

NOTE 1—All dimensions are in millimeters.

FIG. 4 Bottom Retainer Frame – Part 2 (Aluminum)

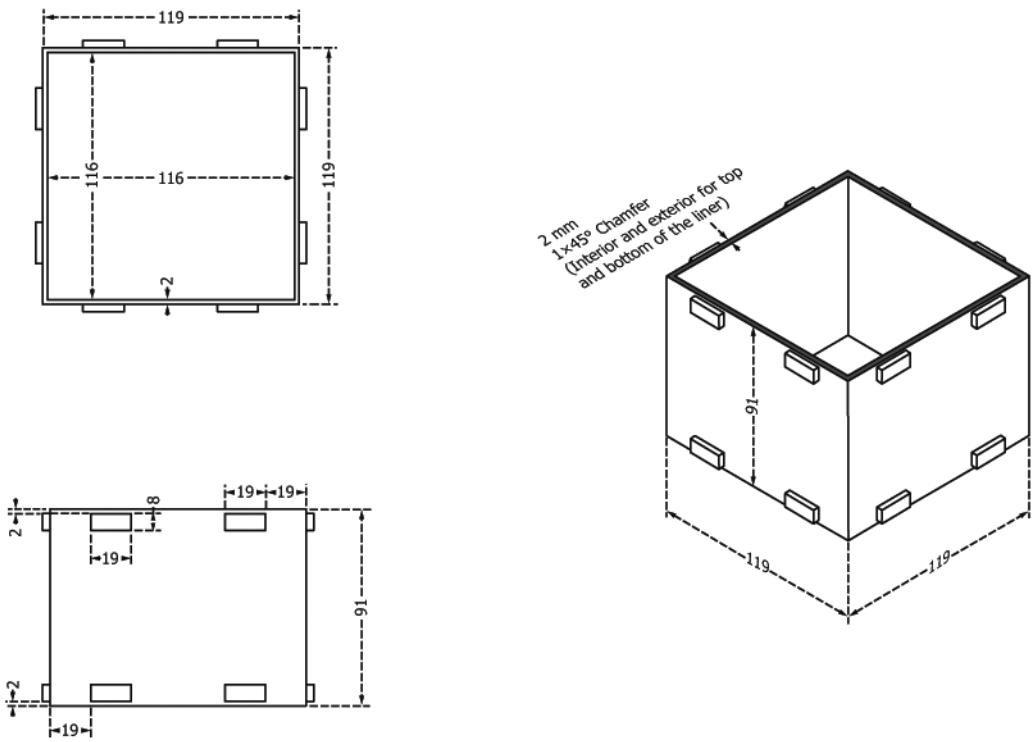

NOTE 1—All dimensions are in millimeters.

NOTE 2—The height *h* of the liner can vary between 25 mm ± 1 mm and 91 mm ± 1 mm.

FIG. 5 Liner (Stainless Steel) with a Selected Liner Height of 91 mm ± 1 mm

8.1.21 If multiple bottom layered materials are used, stack them over the core starting from the top layered material that shall be in contact with the core and ending with the top layered material that shall be exposed on the bottom surface of the specimen. Align and center the bottom layered materials over the core as described in 8.1.19.

8.1.22 Place the bottom retainer frame on top of the core or the optional bottom layered materials. Align the corners of the bottom retainer frame with the corners of the underlying top retainer frame and center the bottom retainer frame over the liner.

8.1.23 Insert four screws with compression springs, spacers, and washers (see Fig. 1) in the holes located on the four tabs of the bottom retainer frame.

8.1.24 When flexible bottom layered materials are used in combination with a flexible core, place and center the mounting plate on the bottom retainer frame. Align the corners of the mounting plate with the corners of the underlaying bottom retainer frame and compress the flexible core by applying pressure on the mounting plate. Keep applying pressure until completion of 8.1.25.

8.1.25 Insert and tighten the four screws in the threaded tabs of the top retainer frame. Keep slowly tightening each screw until the washers, the spacer, the screw head and the tab on the top retainer frame are in contact with each other, and the spacer cannot freely rotate anymore. If a mounting place was used, remove it.

AVA Documents
Document Sharing Hub

Full document details: ASTM E3367-23

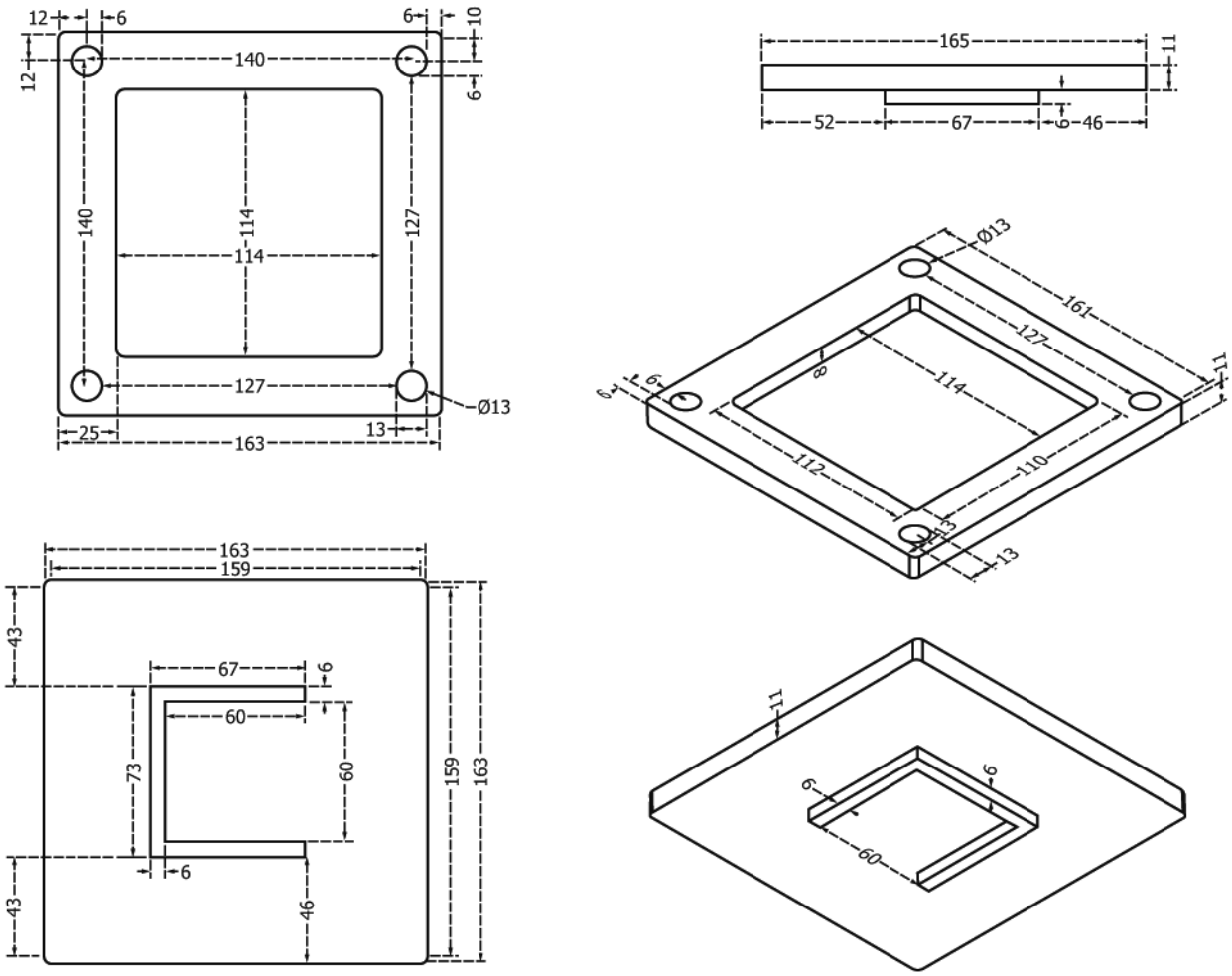

NOTE 1—All dimensions are in millimeters.

FIG. 6 Sample Stage (Aluminum)

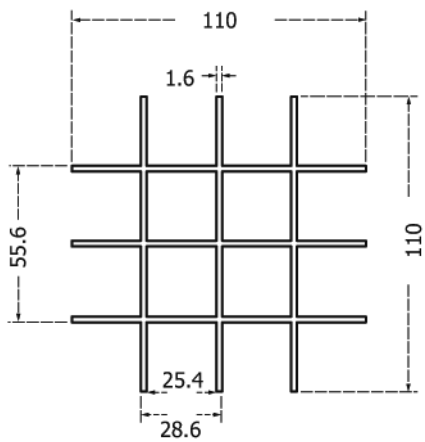

NOTE 1—All dimensions are in millimeters.

NOTE 2—Wire diameter 1.6 mm, weld all intersections.

FIG. 7 Wire Grid (Stainless Steel)

8.1.26 Ensure that the specimens are free of folds, creases, or wrinkles.

8.1.27 Place the ceramic felt inside the cavity in the sample stage (see Fig. 1).

8.1.28 Center the aluminum catch pan over the ceramic felt.

8.1.29 Move the sample holder and specimen assembly over the sample stage so that the four legs of the sample holder fit inside the four circular cavities on the sample stage.

AVA Documents
Document Sharing Hub

Full document details: ASTM E3367-23