This international standard was developed in accordance with internationally recognized principles on standardization established in the Decision on Principles for the Development of International Standards, Guides and Recommendations issued by the World Trade Organization Technical Barriers to Trade (TBT) Committee.

Designation: E384 – 22

Standard Test Method for Microindentation Hardness of Materials[1]

This standard is issued under the fixed designation E384; the number immediately following the designation indicates the year of original adoption or, in the case of revision, the year of last revision. A number in parentheses indicates the year of last reapproval. A superscript epsilon (ε) indicates an editorial change since the last revision or reapproval.

This standard has been approved for use by agencies of the U.S. Department of Defense.

1. Scope*

1.1 This test method covers determination of the microindentation hardness of materials.

1.2 This test method covers microindentation tests made with Knoop and Vickers indenters under test forces in the range from 9.8×10^{-3} to 9.8 N (1 to 1000 gf).

1.3 This test method includes an analysis of the possible sources of errors that can occur during microindentation testing and how these factors affect the precision, bias, repeatability, and reproducibility of test results.

1.4 Information pertaining to the requirements for direct verification and calibration of the testing machine and the requirements for the manufacture and calibration of Vickers and Knoop reference hardness test blocks are in Test Method E92.

NOTE 1—While Committee E04 is primarily concerned with metals, the test procedures described are applicable to other materials.

1.5 *Units*—The values stated in SI units are to be regarded as standard. No other units of measurement are included in this standard.

1.6 *This standard does not purport to address all of the safety concerns, if any, associated with its use. It is the responsibility of the user of this standard to establish appropriate safety, health, and environmental practices and determine the applicability of regulatory limitations prior to use.*

1.7 *This international standard was developed in accordance with internationally recognized principles on standardization established in the Decision on Principles for the Development of International Standards, Guides and Recommendations issued by the World Trade Organization Technical Barriers to Trade (TBT) Committee.*

2. Referenced Documents

2.1 *ASTM Standards:*[2]

C1326 Test Method for Knoop Indentation Hardness of Advanced Ceramics

C1327 Test Method for Vickers Indentation Hardness of Advanced Ceramics

E3 Guide for Preparation of Metallographic Specimens

E7 Terminology Relating to Metallography

E92 Test Methods for Vickers Hardness and Knoop Hardness of Metallic Materials

E140 Hardness Conversion Tables for Metals Relationship Among Brinell Hardness, Vickers Hardness, Rockwell Hardness, Superficial Hardness, Knoop Hardness, Scleroscope Hardness, and Leeb Hardness

E175 Terminology of Microscopy (Withdrawn 2019)[3]

E177 Practice for Use of the Terms Precision and Bias in ASTM Test Methods

E691 Practice for Conducting an Interlaboratory Study to Determine the Precision of a Test Method

E766 Practice for Calibrating the Magnification of a Scanning Electron Microscope

E1268 Practice for Assessing the Degree of Banding or Orientation of Microstructures

E2554 Practice for Estimating and Monitoring the Uncertainty of Test Results of a Test Method Using Control Chart Techniques

E2587 Practice for Use of Control Charts in Statistical Process Control

2.2 *ISO Standard:*[4]

ISO/IEC 17025 General Requirements for the Competence of Testing and Calibration Laboratories

[1] This test method is under the jurisdiction of ASTM Committee E04 on Metallography and is the direct responsibility of Subcommittee E04.05 on Microindentation Hardness Testing. With this revision the test method was expanded to include the requirements previously defined in E28.92, Standard Test Method for Vickers Hardness Testing of Metallic Material that was under the jurisdiction of E28.06

Current edition approved Oct. 1, 2022. Published November 2022. Originally approved in 1969. Last previous edition approved in 2017 as E384 – 17. DOI: 10.1520/E0384-22

[2] For referenced ASTM standards, visit the ASTM website, www.astm.org, or contact ASTM Customer Service at service@astm.org. For *Annual Book of ASTM Standards* volume information, refer to the standard's Document Summary page on the ASTM website.

[3] The last approved version of this historical standard is referenced on www.astm.org.

[4] Available from International Organization for Standardization (ISO), 1, ch. de la Voie-Creuse, Case postale 56, CH-1211, Geneva 20, Switzerland, http://www.iso.org.

*A Summary of Changes section appears at the end of this standard

Copyright © ASTM International, 100 Barr Harbor Drive, PO Box C700, West Conshohocken, PA 19428-2959. United States

Documents
Document Sharing Hub
Full document details: ASTM E384-22

3. Terminology

3.1 *Definitions*—For definitions of terms used in this test method, see Terminology E7.

3.2 *Definitions of Terms Specific to This Standard:*

3.2.1 *calibrating, v*—determining the values of the significant parameters by comparison with values indicated by a reference instrument or by a set of reference standards.

3.2.2 *Knoop hardness number, HK, n*—an expression of hardness obtained by dividing the force applied to the Knoop indenter by the projected area of the permanent impression made by the indenter.

3.2.3 *Knoop indenter, n*—a rhombic-based pyramidal-shaped diamond indenter with edge angles of ∠ A = 172° 30' and ∠ B = 130° 0' (see Fig. 1).

3.2.4 *microindentation hardness test, n*—a hardness test using a calibrated machine to force a diamond indenter of specific geometry into the surface of the material being evaluated, in which the test forces range from 1 to 1000 gf (9.8 × 10^{-3} to 9.8 N), and the indentation diagonal, or diagonals, are measured with a light microscope after load removal; for any microindentation hardness test, it is assumed that the indentation does not undergo elastic recovery after force removal.

NOTE 2—Use of the term microhardness should be avoided because it implies that the hardness, rather than the force or the indentation size, is very low.

3.2.5 *verifying, v*—checking or testing the instrument to assure conformance with the specification.

3.2.6 *Vickers hardness number, HV, n*—an expression of hardness obtained by dividing the force applied to a Vickers indenter by the surface area of the permanent impression made by the indenter.

3.2.7 *Vickers indenter, n*—a square-based pyramidal-shaped diamond indenter with face angles of 136° (see Fig. 2).

3.3 *Formulae*—The formulae presented in 3.3.1 – 3.3.4 for calculating microindentation hardness are based upon an ideal tester and conditions. The measured value of the microindentation hardness of a material is subjected to several sources of errors. Based on Eq 1-9, variations in the applied force, geometrical variations between diamond indenters, and human errors in measuring indentation lengths will affect the precision of the calculated material hardness. The magnitude of the error that variations of each of these parameters have on the calculated value of a microindentation measurement is discussed in Section 10.

3.3.1 For Knoop hardness tests, in practice, test loads are in grams-force and indentation diagonals are in micrometers. The Knoop hardness number is calculated using the following:

$$HK = 1.000 \times 10^3 \times (P/A_p) = 1.000 \times 10^3 \times P/(c_p \times d^2) \quad (1)$$

or

$$HK = 14229 \times P/d^2 \quad (2)$$

$$c_p = \frac{\tan\frac{\angle B}{2}}{2\tan\frac{\angle A}{2}} \quad (3)$$

where:

P = force, gf,
d = length of long diagonal, µm,
A_p = projected area of indentation, µm ^{2}
$\angle A$ = included longitudinal edge angle, 172° 30'
$\angle B$ = included transverse edge angle, 130° 0' (see Fig. 1 and,
c_p = indenter constant relating projected area of the indentation to the square of the length of the long diagonal, ideally 0.07028.

3.3.2 The Knoop hardness, kgf/mm^2 is determined as follows:

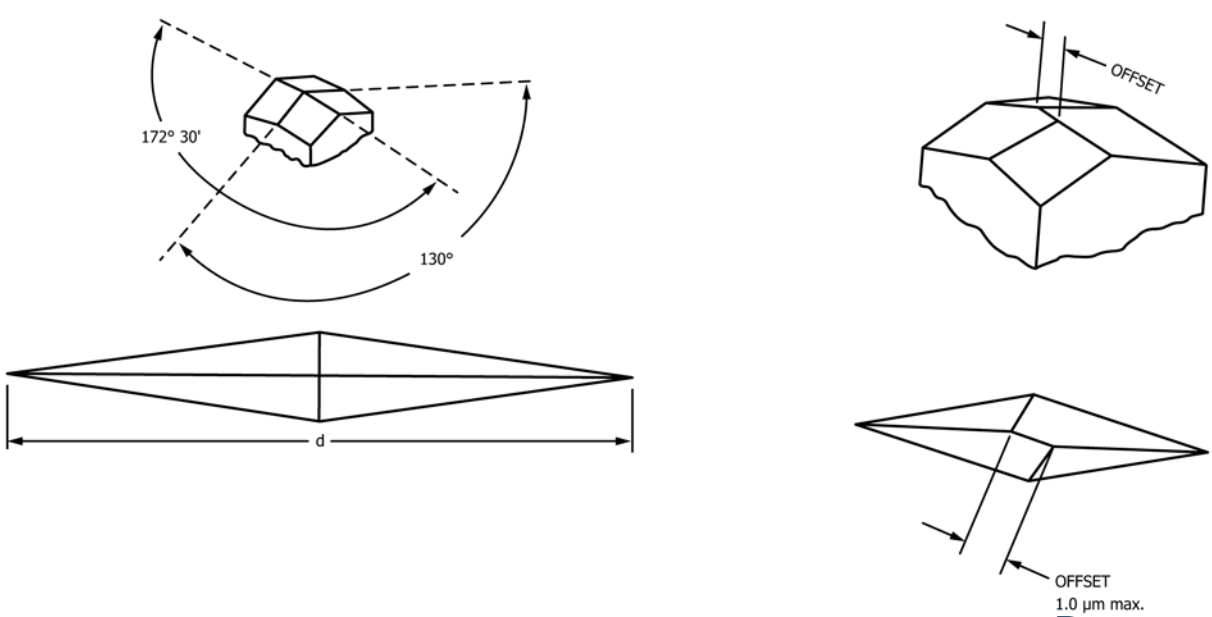

FIG. 1 Knoop Indenter

Documents
Document Sharing Hub
Full document details: ASTM E384-22

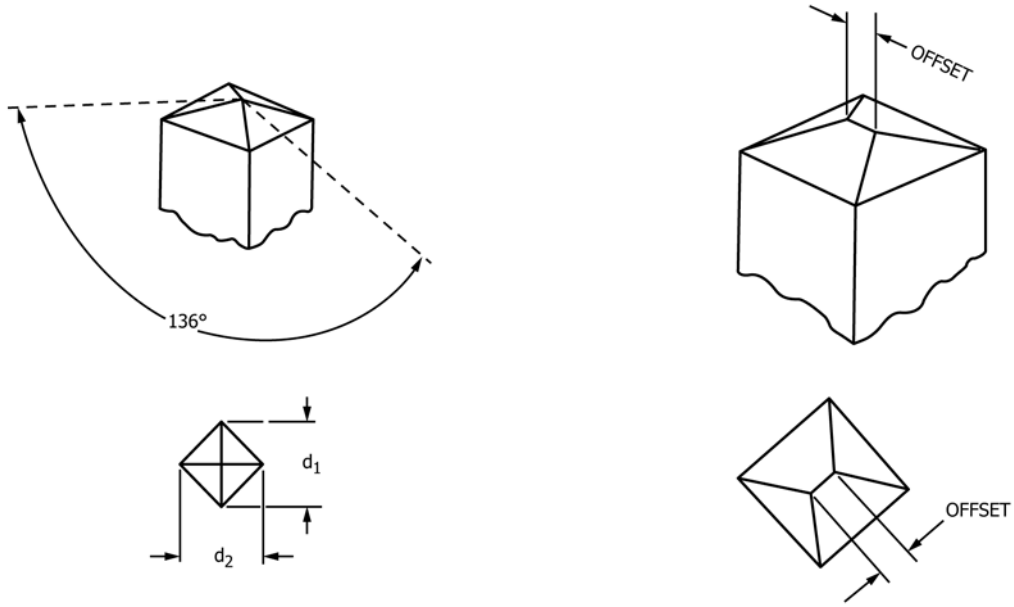

FIG. 2 Vickers Indenter

$$HK = 14.229 \times P_1/d_1^2 \quad (4)$$

where:

P_1 = force, kgf, and
d_1 = length of long diagonal, mm.

3.3.3 The Knoop hardness reported with units of GPa is determined as follows:

$$HK = 0.014229 \times P_2/d_2^2 \quad (5)$$

where:

P_2 = force, N, and
d_2 = length of the long diagonal of the indentation, mm.

3.3.4 For the Vickers hardness test, in practice, test loads are in grams-force and indentation diagonals are in micrometers. The Vickers hardness number is calculated as follows:

$$HV = 1.000 \times 10^3 \times P/A_s = 2.000 \times 10^3 \times P sin(\alpha/2)/d^2 \quad (6)$$

or

$$HV = 1854.4 \times P/d^2 \quad (7)$$

where:

P = force, gf,
A_s = surface area of the indentation, μm^2,
d = mean diagonal length of the indentation, μm, and
α = face angle of the indenter, 136° 0' (see Fig. 2).

3.3.5 The Vickers hardness, kgf/mm^2 is determined as follows:

$$HV = 1.8544 \times P_1/d_1^2 \quad (8)$$

where:

P_1 = force, kgf, and
d_1 = mean diagonal length of the indentations, mm.

3.3.6 The Vickers hardness reported with units of GPa is determined as follows:

$$HV = 0.0018544 \times P_2/d_2^2 \quad (9)$$

where:

P_2 = force, N, and
d_2 = mean diagonal length of the indentations, mm.

3.4 Equations for calculating % Error and Repeatability for periodic verification is determined as follows:

$$E = 100\left(\frac{|\bar{d} - d_{ref}|}{d_{ref}}\right) \quad (10)$$

where:

E = % error in performance of the periodic verification,
$\bar{d}$ = the measured mean diagonal length in μm, and
d_{ref} = the reported certified mean diagonal length, μm.

$$R = 100\left(\frac{d_{max} - d_{min}}{\bar{d}}\right) \quad (11)$$

where:

R = repeatability in performance of the periodic verification,
d_{max} = the longest diagonal length measurement on the standardized test block, μm,
d_{min} = the shortest diagonal length measurement on the standardized test block, μm, and
$\bar{d}$ = the measured mean diagonal length in μm.

4. Summary of Test Method

4.1 In this test method, a hardness number is determined based on the formation of a very small indentation by application of a relatively low force, in comparison to traditional bulk indentation hardness tests.

4.2 A Knoop or Vickers indenter, made from diamond of specific geometry, is pressed into the test specimen surface under an applied force in the range of 1 to 1000 gf using a test machine specifically designed for such work.

AVA Documents
Document Sharing Hub

Full document details: ASTM E384-22

4.3 The size of the indentation is measured using a light microscope equipped with a filar type eyepiece, or other type of measuring device (see Terminology E175).

4.4 The Knoop hardness number is based upon the force divided by the projected area of the indentation. The Vickers hardness number is based upon the force divided by the surface area of the indentation.

4.5 It is assumed that elastic recovery does not occur when the indenter is removed after the loading cycle, that is, it is assumed that the indentation retains the shape of the indenter after the force is removed, but this is not always true. In Knoop testing, it is assumed that the ratio of the long diagonal to the short diagonal of the impression is the same as for the indenter, 7.114, but this is not always true due to elastic recovery.

5. Significance and Use

5.1 Hardness tests have been found to be very useful for materials evaluation, quality control of manufacturing processes and research and development efforts. Hardness, although empirical in nature, can be correlated to tensile strength for many metals and alloys, and is also an indicator of machinability, wear resistance, toughness and ductility.

5.2 Microindentation tests are utilized to evaluate and quantify hardness variations that occur over a small distance. These variations may be intentional, such as produced by localized surface hardening, for example, from shot blasting, cold drawing, flame hardening, induction hardening, etc., or from processes such as carburization, nitriding, carbonitriding, etc.; or, they may be unintentional variations due to problems, such as decarburization, localized softening in service, or from compositional/microstructural segregation problems. Low test forces also extend hardness testing to materials too thin or too small for macroindentation tests. Microindentation tests permit hardness testing of specific phases or constituents and regions or gradients too small for evaluation by macroindentation tests.

5.3 Because microindentation hardness tests will reveal hardness variations that commonly exist within most materials, a single test value may not be representative of the bulk hardness. Vickers tests at 1000 gf can be utilized for determination of the bulk hardness, but, as for any hardness test, it is recommended that a number of indents are made and the average and standard deviation are calculated, as needed or as required.

5.4 Microindentation hardness testing is generally performed to quantify variations in hardness that occur over small distances. To determine these differences requires a very small physical indentation. Testers that create indents at very low test forces must be carefully constructed to accurately apply the test forces exactly at the desired location and must have a high-quality optical system to precisely measure the diagonal (or diagonals) of the small indents. Test forces in the upper range of the force range defined in 1.2 may be used to evaluate bulk hardness. In general, the Vickers indenter is better suited for determining bulk (average) properties as Vickers hardness is not altered by the choice of the test force, from 25 gf to 1000 gf, because the indent geometry is constant as a function of indent depth. The Knoop indentation, however, is not geometrically identical as a function of depth and there will be variations in Knoop hardness, particularly at test forces <200 gf, over the force range defined in 1.2 (and above this range); consequently, Knoop hardness is not normally used to define bulk hardness, except at 500 gf where E140 gives conversions to other test scales, and Knoop tests should not be performed at test forces above 1000 gf. The majority of Knoop tests of case hardness variations are conducted at forces from 100 gf to 500 gf. If the test is being conducted to meet a specified bulk hardness value, such as HRC, then most such tests will be conducted with Knoop at a 500 gf load. Because of the large difference between the long and short Knoop diagonals, the Knoop indenter is often better suited for determining variations of hardness over very small distances compared to the Vickers indenter. Vickers and Knoop tests at forces ≤25 gf are susceptible to imprecision due to the difficulty in measuring extremely small indents (<20 µm) by light microscopy with high precision and reproducibility. Tests made at forces ≤25 gf should be considered to be qualitative in nature. Likewise, test forces that create indents <20 µm in length should be avoided whenever possible and should be considered to be qualitative in nature. The success of the specimen preparation procedure in removing preparation-induced damage can, and will, influence test results; this problem becomes more critical as the test force decreases.

6. Apparatus

6.1 *Test Machine*—The test machine must support the test specimen and control the movement of the indenter into the specimen under a preselected test force, and should have a light optical microscope to select the desired test locations and to measure the size of the indentations produced by the test. The plane of the surface of the test specimen must be perpendicular to the axis of the indenter and the direction of the force application. The plane of the test specimen surface must be flat, and free of surface relief, in order to obtain valid, usable test data. The hardness test machine must meet the verification requirements defined in Test Method E92.

6.1.1 *Force Application*—The test machine shall be capable of applying the test forces according to the following:

6.1.1.1 The time from the initial application of the force until the full test force is reached shall not exceed 10 s.

6.1.1.2 The indenter shall contact the specimen at a velocity between 15 µm/s and 70 µm/s. Indenter velocity is not usually adjustable by the user.

6.1.1.3 The full test force shall be applied for 10 s to 15 s unless otherwise specified.

6.1.1.4 For some applications it may be necessary to apply the test force for longer times. In these instances the tolerance for the time of the applied force is ± 2 s.

6.1.2 *Vibration Control*—During the entire test cycle, the test machine should be protected from shock or vibration. To minimize vibrations, the operator should avoid contacting the machine, or the support table, in any manner during the entire test cycle.

6.2 *Vickers Indenter*—The Vickers indenter normally produces geometrically-similar indentation shapes at all test forces. Except for tests at very low forces that produce

AVA Documents
Document Sharing Hub

Full document details: ASTM E384-22

indentations with diagonals smaller than about 20 µm, the Vickers hardness number will be the same, within statistical precision limits, as produced using test forces that produce diagonal lengths ≥20 µm, using either a microindentation test machine up to 1000 gf or a macroindentation test machine with test forces ≥ 1 kgf, as long as the material being tested is reasonably homogeneous and the magnification and image quality are optimal (see Appendix X4). For isotropic materials, the two diagonals of a Vickers indentation are equal in size. Metals/alloys with preferred crystallographic textures may produce distorted indents and invalid or questionable test results. The Vickers indenter must meet the verification requirements defined in Test Method E92.

6.2.1 The ideal Vickers indenter is a highly polished, pointed, square-based pyramidal diamond with face angles of 136° 0'. The effect that geometrical variations of these angles have on the measured values of Vickers hardness is discussed in Section 10.

6.2.2 The four faces of the Vickers indenter shall be equally inclined to the axis of the indenter (within ± 30') and shall meet at a sharp point. The line of junction between opposite faces (offset) shall be not more than 0.5 µm in length as shown in Fig. 2.

6.3 *Knoop Indenter*—The Knoop indenter does not produce geometrically-similar indentation shapes as a function of test force and indent depth. Consequently, the Knoop hardness will vary with test force (see Appendix X4). Due to its rhombic shape, the indentation depth is shallower for a Knoop indentation compared to a Vickers indentation under identical test conditions. But, for the same test force, the Knoop long diagonal will be substantially longer than the mean of the two Vickers diagonals. The two diagonals of a Knoop indentation are markedly different. Ideally, the long diagonal is 7.114 times longer than the short diagonal, but this ratio is influenced by elastic recovery. Because of its shape, the Knoop indenter is very useful for evaluating hardness gradients or thin coatings. The Knoop test is not recommended for use above a 1 kgf test load. The Knoop indenter must meet the verification requirements defined in Test Method E92.

6.3.1 The Knoop indenter is a highly polished, pointed, rhombic-based, pyramidal diamond (**1**).[5] The ideal included longitudinal edge angles are 172° 30' and 130° 0'. The ideal indenter constant, c_p, is 0.07028. The effect that geometrical variations of these angles have on the measured values of Knoop hardness is discussed in Section 10.

6.3.2 The four faces of the Knoop indenter shall be equally inclined to the axis of the indenter (within ± 30') and shall meet at a sharp point. The line of junction between opposite faces (offset) shall be not more than 1.0 µm in length for indentations greater than 20 µm in length, as shown in Fig. 1. For shorter indentations, the offset should be proportionately less.

6.3.3 Indenters should be examined periodically and replaced if they become worn, dulled, chipped, cracked or separated from the mounting material. Never touch the indenter tip with your finger.

6.4 *Measuring Equipment*—The test machine's measuring device should report the diagonal lengths in 0.1 µm increments for indentations with diagonals from 1 to 200 µm.

NOTE 3—This is the reported length and not the resolution of the system used for performing the measurements. As an example, if a length of 200 µm corresponds to 300 filar units or pixels, the corresponding calibration constant would be 200/300 = 0.66666667. This value would be used to compute diagonal lengths, but the reported length would only be reported to the nearest 0.1 µm.

6.4.1 The optical portion of the measuring device should utilize Köhler illumination. Consult the manufacturer's instruction manual for the adjustments that can be made on your tester.

6.4.2 To obtain maximum resolution, the measuring microscope should have high quality objectives with adequate numerical apertures, a suitable eyepiece, adjustable illumination intensity, adjustable alignment and aperture and field diaphragms. These are adjusted in the same manner as on a reflected light microscope or metallograph. Some systems are now designed using computer monitors and indent length detection by image analysis and may not utilize a traditional eyepiece, but have a projection lens connected to a CCD camera. While a traditional eyepiece has a circular field of view, the computer monitor is rectangular and its height-to-width ratio can vary.

6.4.3 Magnifications should be provided so that the diagonal can be enlarged to greater than 25 % but less than 75 % of the field width. If the computer screen has a 4 to 3 ratio of width to height, or a greater difference between the screen width and height, the maximum field height must be <75 % of the width to measure both Vickers diagonals. A 40× or 50× objective may not be adequate for precise measurement of indents <30 µm in length. Measurements of diagonal lengths <20 µm in length with the light microscope may be imprecise, regardless of the objective magnification used, with the problem becoming more acute as the diagonal length decreases below 20 µm.

7. Test Specimen

7.1 For optimum accuracy of measurement, the test should be performed on a flat specimen with a polished surface free of preparation-induced damage. The surface must be free of any problems that could affect the indentation or the subsequent measurement of the diagonals. Conducting tests on non-planar surfaces is not recommended. Results will be affected even in the case of the Knoop test where the radius of curvature is in the direction of the short diagonal.

7.1.1 In all tests, the indentation perimeter, and the indentation tips in particular, must be clearly defined in the microscope field of view.

7.1.2 For best results, the specimen surface should not be etched before making an indentation (**2**), although etching is often necessary to aid indent location. Deeply etched surfaces will obscure the edge of the indentation, making an accurate measurement of the size of the indentation difficult or impossible. When determining the microindentation hardness of an

[5] The boldface numbers in parentheses refer to the list of references at the end of this standard.

AVA Documents
Document Sharing Hub

Full document details: ASTM E384-22

isolated phase or constituent, or when evaluating segregated compared to non-segregated areas, and other similar situations, a light etch is required to delineate the object or area of interest so that the indentations can be placed in the desired locations. The necessary quality of the required surface preparation does vary with the forces and magnifications used in microindentation hardness testing. The lighter the force and the smaller the indentation size, the more critical is the surface preparation. Some materials are more sensitive to preparation-induced damage than others. In general, face-centered cubic metals (for example, austenitic stainless steels, copper and its alloys, nickel and its alloys, gold and silver) exhibit a larger deformation field around the indent than an indent of the same test force made in a body-centered cubic metal (for example, ferritic and martensitic steels).

7.1.3 Due to the small size of the indentations, special precautions must be taken during specimen preparation. It is well known that improper preparation can alter test results. Specimen preparation must remove any damage introduced during these steps, either due to excessive heating or cold work, for example.

7.1.4 Specimen preparation should be performed in accordance with Guide E3.

7.2 In many instances, it is necessary to mount the specimen for convenience in preparation and for best edge retention. When mounting is required, the specimen must be adequately supported by the mounting medium so that the specimen does not move during force application, such as might happen in an improperly cured polymer mount.

8. Procedure

8.1 Turn on the illumination system and power for the tester.

8.2 Select the desired indenter. If it is necessary to physically change indenters, refer to the manufacturer's instructions. With some machines, both indenters can be mounted on the turret and changed by a simple switch or computer command. Occasionally clean the indenter with a cotton swab and alcohol. Avoid creating static charges during cleaning. Never touch the indenter tip with your fingers as this will alter the measurements.

8.3 Place the specimen on the stage or in the stage clamps, so that the specimen surface is perpendicular to the indenter axis. A top-referenced clamping system for mounts is an excellent device for aligning the test plane perpendicular to the indenter, particularly if the back face of the mount is not parallel to the polished front surface. If clay is used on a slide, use very stiff clay and use high pressure when seating the specimen against the clay.

8.4 Focus the measuring microscope with a low power objective so that the specimen surface can be observed.

8.5 Adjust the light intensity and adjust the apertures for optimum resolution and contrast. Zero the measuring device according to the manufacturer's recommended method.

8.6 Select the area desired for hardness determination. Before applying the force, make a final focus using the measuring objective.

8.7 Adjust the tester so that the indenter is in the proper place for force application. Select the desired force.

8.8 Activate the tester so that the indenter is automatically lowered and makes contact with the specimen for the normally required time period. Then, remove the force either manually or automatically.

8.9 After the force is removed, switch to the measuring mode, and select the proper objective lens. Focus the image, adjust the light intensity if necessary, and adjust the apertures for maximum resolution and contrast.

8.10 Examine the indentation for its position relative to the desired location and for its symmetry.

8.10.1 If the indentation did not occur at the desired spot, the tester is out of alignment. Consult the manufacturer's instruction manual for the proper procedure to produce alignment. Make another indentation and recheck the indentation location. Readjust and repeat as necessary.

8.10.2 For a Knoop indentation, if one half of the long diagonal is more than 10 % longer than the other diagonal half, or if both ends of the indentation are not in sharp focus, the test specimen surface may not be perpendicular to the indenter axis. Such an indent may yield incorrect data and the calculated HK based upon it should be reported outside these limits. Check the specimen alignment and make another test to be sure that the test data is correct.

8.10.3 For a Vickers indentation, if one half of either diagonal is more than 5 % longer than the other half of that diagonal, or if the four corners of the indentation are not in sharp focus, the test surface may not be perpendicular to the indenter axis. Such an indent may yield incorrect data and the calculated HV based upon it should be reported outside these limits. Check the specimen alignment and make another test to be sure that the test data is correct.

8.10.4 If the diagonal legs are unequal as described in 8.10.2 or 8.10.3, rotate the specimen 90° and make another indentation in an untested region. If the nonsymmetrical aspect of the indentations has rotated 90°, then the specimen surface is not perpendicular to the indenter axis. If the nonsymmetrical nature of the indentation remains in the same orientation, check the indenter for misalignment or damage.

8.10.5 Some materials may have nonsymmetrical indentations even if the indenter and the specimen surface are perfectly aligned. Tests on single crystals or on textured materials may produce such results. When this occurs, check the alignment using a test specimen, such as a standard, known to produce uniformly shaped indentations.

8.10.6 Brittle materials, such as ceramics, may crack as a result of being indented. Specific details for testing ceramics are contained in Test Methods C1326 and C1327.

8.11 Measure the long diagonal of a Knoop indentation, or both diagonals of a Vickers indentation, in accordance with the manufacturer's instruction manual.

8.11.1 Determine the length of the long diagonal of a Knoop indentation or both diagonals of a Vickers indentation to within 0.1 µm (see 6.3). For the Vickers indentations, average the two diagonal length measurements.

AVA Documents
Document Sharing Hub

Full document details: ASTM E384-22

8.12 Compute the Knoop or Vickers hardness number using the appropriate equation in Section 3 or using tables supplied with the tester, respectively. Modern testers usually give an automatic readout of the hardness after the diagonal or diagonals have been measured.

8.13 *Spacing of Indentations*—Generally, more than one indentation is made on a test specimen. It is necessary to ensure that the spacing between indentations is large enough so that adjacent tests do not interfere with each other. Because face-centered cubic (FCC) metals (for example, austenitic stainless steels, copper, nickel, silver and gold) work harden more dramatically than body-centered cubic (BCC) metals (ferritic steels, for example), the indent spacing distance is more critical for FCC metals as the deformation zone around the indent is larger than for a BCC metal, as mentioned in 7.1.2.

8.13.1 For most testing purposes, the minimum recommended spacing between separate tests and the minimum distance between an indentation and the surface of the specimen, are illustrated in Fig. 3.

8.13.2 For some applications, closer spacing of indentations than those shown in Fig. 3 may be necessary. If a closer indentation spacing is used, it shall be the responsibility of the testing laboratory to verify the accuracy of the testing procedure. Parallel, staggered bands of indents from the surface inward can be utilized to obtain closer overall spacing of indents with respect to the distance from the surface than can be safely done with a single line of indents from the surface inward, or within the interior of the specimen.

9. Report

9.1 Report the following information:

9.1.1 The number of tests and, where appropriate or required, the mean, standard deviation and 95 % confidence interval for the tests. Due to the long history of hardness calculations, and because the traditional kg/mm^2 unit is not part of the SI system, the calculated numbers will be reported without mention of the units. Also, due to the general unfamiliarity of the metallurgical community with hardness numbers in GPa, and the rather narrow range of GPa values for metals, a "soft" SI system approach is recommended.

9.1.2 Test force, and

9.1.3 Any unusual conditions encountered during the test.

9.2 The symbols HK for Knoop hardness and HV for Vickers hardness shall be used with the reported numerical values.

9.2.1 For this standard, the microindentation hardness test results can be reported in several different ways. For example, if the Knoop hardness was found to be 400, and the test force was 100 gf, the test results may be reported as follows:

9.2.1.1 For microindentation hardness tests, where the test force is generally in gram force units, with test forces ≤1000 gf, this result can be reported as 400 HK 0.1, for example, when a test at 100 gf yields a Knoop hardness of 400. The same approach is used to report the Vickers hardness.

9.2.1.2 In the SI system the hardness would be reported as 3.92 GPa, but this practice is not preferred for the reasons stated in 9.1.1.

9.2.1.3 For nonstandard dwell times, other than 10 s to 15 s, the hardness would be reported as 400 HK 0.1/22 s. In this case, 22 s would be the actual time of the full load dwell time.

9.2.1.4 For macro-Vickers tests with forces >1 kgf, see Test Method E92 for the recommended notation.

9.3 Examples of the calculation of measurement uncertainty are given in Test Method E92.

10. Precision and Bias

10.1 The precision and bias of microindentation hardness measurements depend on strict adherence to the stated test procedure and are influenced by instrumental and material factors and indentation measurement errors.

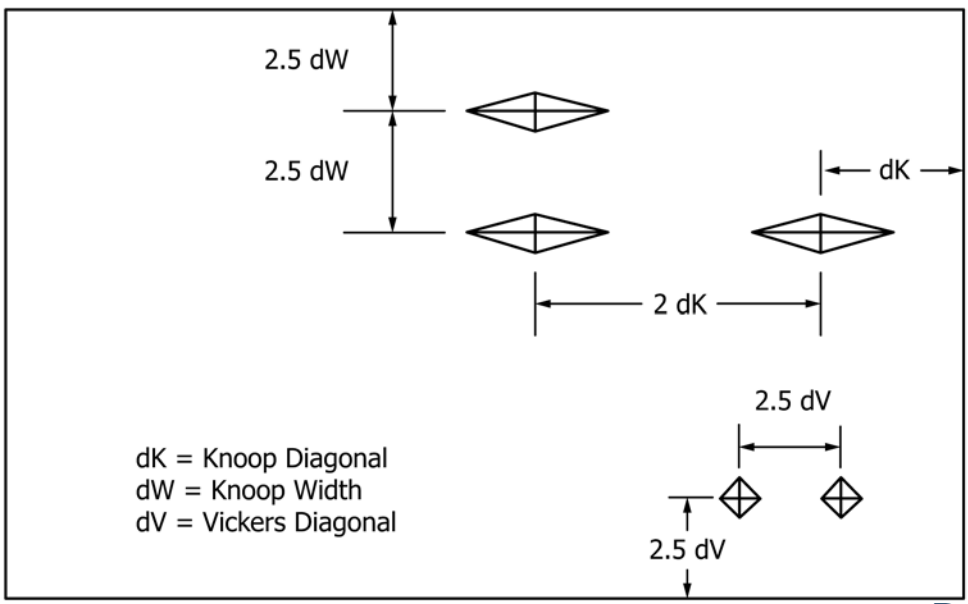

FIG. 3 Minimum Recommended Spacing for Knoop and Vickers Indentations

AVA Documents
Document Sharing Hub

Full document details: ASTM E384-22

10.2 The consistency of agreement for repeated tests on the same material is dependent on the homogeneity of the material, reproducibility of the hardness tester, and consistent, careful measurement of the indents by a competent operator.

10.3 Instrumental factors that can affect test results include: accuracy of loading; inertia effects; speed of loading; vibrations; the angle of indentation; lateral movement of the indenter or specimen; and, indentation and indenter shape deviations.

10.3.1 Vibrations during indenting will produce larger indentations with the potential influence of vibrations becoming greater as the force decreases (**2, 3**).

10.3.2 The angle between the indenter and specimen surface should be within 2° of perpendicular. Greater amounts of tilting may produce non-uniform indentations and incorrect test results.

10.4 Material factors that can affect test results include: specimen homogeneity, orientation or texture effects; improper specimen preparation; low specimen surface reflectivity; and, transparency of the specimen.

10.4.1 Residual deformation from mechanical polishing must be removed, particularly for low-force (≤200 gf) testing.

10.4.2 Distortion of the indentation shape, due to either crystallographic or microstructural texture, influences diagonal lengths and the validity of the calculated hardness.

10.4.3 Plastic deformation during indentation can produce ridging around the indentation periphery that will affect diagonal measurement accuracy.

10.4.4 Testing of etched surfaces, depending on the extent of etching, may produce results that are different from those obtained on unetched surfaces (**2**).

10.5 Measurement errors that can affect test results include: inaccurate calibration of the measuring device; inadequate resolving power of the objective; insufficient magnification; operator bias in sizing the indentations; poor image contrast; non-uniform illumination; and, improper zeroing of the measuring device.

10.5.1 The accuracy of microindentation hardness testing is strongly influenced by the accuracy to which the indentations can be measured.

10.5.2 The error in measuring the diagonals increases as the numerical aperture of the measuring objective decreases (**4, 5**). In general, indents <30 µm in length should be measured with objectives having greater magnification than 40 or 50×. Image contrast between the indent and the specimen is critical for precise measurement of diagonal length.

10.5.3 Bias is introduced if the operator consistently undersizes or over-sizes the indentations.

10.6 Some of the factors that affect test results produce systematic errors that influence all test results while others primarily influence low-force (≤25 gf) test results (**6**). Some of these problems occur continually, others may occur in an undefined, sporadic manner. Low-force hardness tests are influenced by these factors to a greater extent than higher force tests.

10.7 For both the Vickers and Knoop hardness tests, the calculated microindentation hardness is a function of three variables: force, indenter geometry and diagonal measurement. For the Vickers test, the error in measuring the diagonals has a bigger effect on the precision of the HV value than a larger error in the test force or the face geometry. For the Knoop test, an error in measuring the long diagonal has a bigger influence on the precision of the HK value than a larger error in the test force. But, errors in the two face angles, Fig. 1, have a very significant effect on the precision of the HK value.

10.8 Three separate interlaboratory studies have been conducted in accordance with Practice E691 to determine the precision, repeatability, and reproducibility of this test method. The three studies are defined as follows: *(a)* Knoop and Vickers tests, six test forces in the micro range, twelve laboratories, manual measurements, and seven different hardness level specimens (see 10.8.1 and Appendix X1). Results were published in 1989 (**7, 8**) and in ASTM Research Report RR:E04-1004.[6] *(b)* Knoop and Vickers tests, two test forces in the micro range, seven laboratories, image analysis and manual measurements, four different hardness level specimens (see 10.8.2, Appendix X2 and ASTM Research Report RR:E04-1006).[7] *(c)* Knoop and Vickers tests, six test forces in the micro range, twenty-five laboratories, manual measurements, six different hardness level specimens (see 10.8.3, Appendix X3 and ASTM Research Report RR:E04-1007).[8]

10.8.1 An interlaboratory test program was conducted in accordance with Practice E691 to develop information regarding the precision, repeatability, and reproducibility of the measurement of Knoop and Vickers indentations (supporting data have been filed at ASTM Headquarters; request RR:E04-1004).[6] The test forces were 25, 50, 100, 200, 500, and 1000 gf on three ferrous and four nonferrous specimens (**7, 8**). Twelve laboratories measured the indentations, five of each type at each force on each sample. Additional details of this study are given in Appendix X1.

10.8.1.1 Tests of the three ferrous specimens revealed that nine laboratories produced similar measurements while two laboratories consistently undersized the indentations and one laboratory consistently oversized the indentations; that is, biased results were produced. These latter results were most pronounced as the force decreased and specimen hardness increased (that is, as the diagonal size decreased) and were observed for both Vickers and Knoop indentations. Results for the lower hardness nonferrous indentations produced better agreement. However, none of the laboratories that obtained higher or lower results on the ferrous specimens measured the nonferrous indentations.

10.8.1.2 *Repeatability Interval*—The difference due to test error between two test results in the same laboratory on the same material increases with increasing specimen hardness and with decreasing test force (see X1.4.4).

[6] Supporting data have been filed at ASTM International Headquarters and may be obtained by requesting Research Report RR:E04-1004. Contact ASTM Customer Service at service@astm.org.

[7] Supporting data have been filed at ASTM International Headquarters and may be obtained by requesting Research Report RR:E04-1006. Contact ASTM Customer Service at service@astm.org.

[8] Supporting data have been filed at ASTM International Headquarters and may be obtained by requesting Research Report RR:E04-1007. Contact ASTM Customer Service at service@astm.org.

AVA Documents
Document Sharing Hub

Full document details: ASTM E384-22

10.8.1.3 *Reproducibility Interval*—The difference in test results on the same material tested in different laboratories increased with increasing specimen hardness and with decreasing test force (see X1.4.5).

10.8.1.4 The within-laboratory and between-laboratory precision values improved as specimen hardness decreased and test force increased. The repeatability interval and reproducibility interval were generally larger than the precision estimate, particularly at low test forces and high specimen hardness.

10.8.2 An interlaboratory test program was conducted in accordance with Practice E691 to develop information regarding the repeatability and reproducibility of Knoop and Vickers measurements made with automated image analysis systems compared to measurements by manual procedures. Four ferrous specimens were used in the round robin. The tests were conducted at 100 gf and 300 gf. The participants in the test program measured the same indentations on the four specimens. Seven labs measured the specimens using both procedures. The Knoop indentations on specimen C1 were too long for accurate measurements to be made by one lab; hence, only six sets of measurements were made on this specimen. Near the end of the test program, specimen B1 was lost in shipping; thus only six sets of measurements were made on this specimen. Additional details of the study are contained in Appendix X2.

10.8.2.1 Repeatability concerns the variability between individual test results obtained within a single laboratory by a single operator with a specific set of test apparatus. For both the manual and automated measurements, the repeatability interval increased with specimen hardness and decreasing test force, Appendix X2. For equivalent testing conditions, the repeatability interval for automated measurements was slightly larger than for manual measurements.

10.8.2.2 Reproducibility deals with the variability between single test results obtained by different laboratories applying the same test methods to the same or similar test specimens. For both the manual and automated measurements, the reproducibility interval increased with specimen hardness and decreasing test force, Appendix X2. For equivalent testing conditions, the reproducibility interval for automated measurements was slightly larger than for manual measurements.

10.8.2.3 Neither Practice E691, nor any other ASTM standard, deals with comparing test results of a single property made by two different test methods. Hence, it is not possible to statistically and accurately compare the hardness measurements made by the manual and automated procedures. However, this information is graphically represented for comparative purposes, X2.6.

10.8.3 Tests of six ferrous alloys with hardness values of <20 HRC, 30, 40, 50, 60 and 67 HRC were tested using Knoop and Vickers tests at a variety of test forces, usually 25, 50, 100, 300, 500 and 1000 gf (except that the lowest test forces for Vickers tests of the 60 and 67 HRC specimens were not performed). Twenty-five different laboratories tested the steels using the Vickers test while thirteen different laboratories tested the steels using the Knoop test. Additional details of this study are given in Appendix X3.

10.8.3.1 Repeatability and reproducibility statistics were determined for the Knoop and Vickers diagonal measurements. Results are tabulated in Table X3.1 and Table X3.2 and are shown graphically in Fig. X3.1 and Fig. X3.2.

10.8.3.2 Repeatability and reproducibility statistics were determined for the Knoop and Vickers hardness values. Results are tabulated in Table X3.3 and Table X3.4 and are shown graphically in Fig. X3.3 and Fig. X3.4.

11. Conversion to Other Hardness Scales or Tensile Strength Values

11.1 There is no generally accepted method for precise conversion of Knoop or Vickers microindentation hardness numbers to other hardness scales or tensile strength values. Such conversions are empirical and are limited in precision and should be used with caution, except for special cases where a reliable basis for the conversion has been obtained by comparison tests. For loads ≥ 25 gf microindentation Vickers hardness numbers are in statistical agreement with macro-Vickers hardness numbers. Refer to Standard Hardness Conversion Tables in E140.

12. Keywords

12.1 hardness; indentation; Knoop; microindentation; Vickers

ANNEXES

(Mandatory Information)

A1. VERIFICATION OF KNOOP AND VICKERS HARDNESS TESTING MACHINES AND INDENTERS

A1.1 Scope

A1.1.1 Annex A1 specifies three types of procedures for verifying microindentation (Knoop and Vickers) hardness testing machines: direct verification, indirect verification, and periodic verification. This annex also contains geometric specifications for the indenter. A control chart method for monitoring the consistency of microindentation measurements based on the periodic verification tests and detecting measurement deviations is described in Practices E2554 and E2587.

A1.1.2 Direct verification is a process normally performed by the manufacture for verifying that critical components of the hardness testing machine are within allowable tolerances by

AVA Documents
Document Sharing Hub

Full document details: ASTM E384-22

direct measurement of the applied test forces, the indentation measuring system, and the testing cycle. For additional information about direct verification see Test Method E92.

A1.1.3 Indirect verification is a process performed by the user of the machine, or by an outside certification agency, to periodically verify the performance of the testing machine by means of standardized test blocks. For additional information about the indirect verification procedure, see Test Method E92.

A1.1.4 The periodic (formerly called "weekly") verification is a process for monitoring the performance of the testing machine between indirect verifications by means of standardized test blocks and is performed by the user.

A1.2 General Requirements

A1.2.1 The testing machine shall be verified at specific instances and at periodic intervals as specified in Table A1.1, and when circumstances occur that may affect the performance of the testing machine. See Annex A1 in Test Method E92 for interval details for direct and indirect verifications.

A1.2.2 All instruments used to make measurements required by this Annex shall be calibrated traceable to national standards when a system of traceability exists, except as noted otherwise.

A1.2.3 Periodic verification and the indirect verification of the testing machine shall be performed at the location where the tester is used.

A1.2.4 Direct verification of newly manufactured or rebuilt testing machines may be performed at the place of manufacture, rebuild or the location of use. Details of this procedure can be found in Test Method E92.

NOTE A1.1—It is recommended that the calibration agency that is used to conduct the verifications of microindentation hardness testing machines be accredited to the requirements of ISO 17025 (or an equivalent) by a recognized accrediting body that operates to the requirements of ISO Guide 58.

A1.2.5 *Verification of Indenter*—The geometry of the indenter is verified at the time of manufacturing and it is mandatory for new machines. Subsequent verifications of the indenter are performed by visual inspection of the resulting indentation; it is usually sufficient for the user to verify the absence of defects from the shape of indentations performed on test blocks. Details of this process are given in Test MethodE92.

A1.3 Periodic Verification

A1.3.1 The periodic (formerly known as the "weekly") verification is intended as a tool for the user to monitor the performance of the testing machine between indirect verifications. At a minimum, the periodic verification shall be performed in accordance with the schedule given in Table A1.1 for each microindentation hardness indenter that will be used.

A1.3.2 It is recommended that the periodic verification procedures be performed whenever the indenter is changed, that is, if one indenter is physically removed from the port and another is inserted into its place. This is not required with machines that have both types of indenter mounted on the same turret. It is also recommended to perform a periodic verification when loads are changed (to verify that the load is not "hanging up").

A1.3.3 *Periodic Verification Procedures*—The procedure to use when performing a periodic verification is as follows.

A1.3.3.1 At least one standardized test block that meets the requirements of Annex A2 shall be used for each microindentation hardness indenter to be used. When test blocks are commercially available, the hardness level of the test blocks shall be chosen at approximately the same hardness value as the material to be measured. If various hardness ranges are to be made, it is recommended to take a test block from each range of hardness as described in Table A1.2.

A1.3.3.2 The indenter to be used for the periodic verification shall be the indenter that is normally used for testing.

A1.3.3.3 Before performing the periodic verification tests, ensure that the testing machine is working freely, the stage and test block are clean, and the measuring device is properly adjusted and zeroed.

A1.3.3.4 Make at least three hardness measurements on each of the verification test blocks. The tests shall be distributed uniformly over the surface of the test blocks.

A1.3.3.5 Let $\bar{d}$ be the average of the measurements. Determine the error E and the repeatability R in the performance of the testing machine using Eq 10 and Eq 11 from 3.4 for each standardized test block that is measured.

(1) If the error E and the repeatability R calculated for each test block is within the tolerances given in Table A1.3, the testing machine with the indenter may be regarded as performing satisfactorily.

(2) If the error E and the repeatability R calculated for any of the test blocks is outside the tolerances, the periodic verification may be repeated with a different indenter. If the average of the hardness measurements again falls outside of tolerances for any of the test blocks, an indirect verification shall be performed.

A1.3.3.6 If a testing machine fails a periodic verification, the hardness tests made since the last valid periodic verification may be suspect.

NOTE A1.2—It is highly recommended that the results obtained from the periodic verification testing be recorded using accepted Statistical Process Control techniques, such as, but not limited to, *X*-bar (measurement averages) and *R*-charts (measurement ranges), and histograms (see Practices E2554 and E2587).

TABLE A1.1 Verification Schedule for a Microindentation Hardness Testing Machine

Verification Procedure	Schedule
Periodic Verification	Required each week that the machine is used. Recommended whenever the indenter is physically removed and replaced by another indenter.

TABLE A1.2 Hardness Ranges Used for Periodic Verification

Range	Knoop	Vickers
Low	< 250	< 240
Mid	250–650	240–600
High	> 650	> 600

AVA Documents
Document Sharing Hub

Full document details: ASTM E384-22

TABLE A1.3 Repeatability and Error of Test Machines— Periodic Verification by Standardized Test Blocks Based on Measured Diagonal Lengths[A]

Hardness Range of Standardized Test Blocks		Force, gf	*R* Maximum Repeatability (%)	*E* Maximum Error (%)
Knoop	Vickers			
HK > 0	HV > 0	1 ≤ F <100	13	3
HK < 100	HV < 100	100 ≤ F ≤ 1000	13	3
100 ≤ HK ≤ 250	100 ≤ HV ≤ 240	100 ≤ F < 500	13	2
250 < HK ≤ 650	240 < HV ≤ 600		5	2
HK > 650	HV > 600		4	2
100 ≤ HK ≤ 250	100 ≤ HV ≤ 240	500 ≤ F ≤ 1000	8	2
250 < HK ≤ 650	240 < HV ≤ 600		4	2
HK > 650	HV > 600		3	2

[A] In all cases, the repeatability is the greater of the percentage given or 1 µm; the maximum error is the greater of the value obtained or 0.5 µm.

A1.4 Verification Report

A1.4.1 A verification report is required for direct and indirect verifications. A verification report is not required for a periodic verification. Additional details concerning creation of the verification report can be found in Test Method E92.

A1.4.2 The verification report shall be produced by the person performing the verification and include the following information when available as a result of the verification performed.

A1.4.2.1 Full details of the verification report can be found in Test Method E92.

A1.4.2.2 The basic components of the verification report, as defined in detail in Test Method E92, are summarized below.

(1) Identification of the hardness testing machine and the indenters used.

(2) Means of verification (test blocks, elastic proving devices, etc.) with statements defining traceability to a national standard.

(3) The microindentation hardness scale(s) verified.

(4) The individual or calculated results used to determine whether the testing machine meets the requirements of the verification performed. Measurements made to determine the as-found condition of the testing machine shall be included whenever they are made.

(5) Description of adjustments or maintenance done to the testing machine.

(6) Date of verification and reference to the verifying agency or department.

(7) Signature of the person performing the verification.

A2. CALIBRATION OF STANDARDIZED HARDNESS TEST BLOCKS FOR MICROINDENTATION HARDNESS TEST MACHINES

A2.1 Scope

A2.1.1 The calibration of standardized hardness test blocks used to verify microindentation hardness test machines is described in Test Method E92. The standardizing machine shall meet the direct verification method described in Test Method E92.

A2.1.2 Re-polishing of the test block will invalidate the standardization and is not recommended. Cleaning of the polished test block surface is often required in normal usage but must not alter the hardness or quality of the polished test surface.

A2.2 Certification of Standardized Test Block

A2.2.1 The certificate accompanying each standardized hardness test block shall include the following information: the arithmetic mean of each group of five impression diagonals; the arithmetic mean and standard deviation of all impression diagonals, the corresponding hardness value, the test force, serial number of the test block, name of the manufacturer and certifying organization, magnification used, and the date.

Documents
Document Sharing Hub
Full document details: ASTM E384-22

APPENDIXES

(Nonmandatory Information)

X1. RESULTS OF INTERLABORATORY TEST OF THE MEASUREMENT OF MICROINDENTATIONS

X1.1 Introduction

X1.1.1 This interlaboratory test program (**7**, **8**) was conducted to develop precision and bias estimates for the measurement of both Knoop and Vickers indentations using forces of 25 to 1000 gf for ferrous and nonferrous specimens covering a wide range of hardness (see Research Report RR:E04-1004).[6]

X1.2 Scope

X1.2.1 This interlaboratory test program provides information on the measurement of the same indentations by different laboratories according to the procedures of Practice E691.

X1.3 Procedure

X1.3.1 Five indentations were made under controlled conditions at each force (25, 50, 100, 200, 500, and 1000 gf), with both Knoop and Vickers indenters using three ferrous and four nonferrous specimens.

X1.3.2 Twelve laboratories measured the indentations on the ferrous specimens and the nonferrous specimens. Two laboratories measured the hardness of both groups.

X1.3.3 Each laboratory used the same stage micrometer to calibrate their measuring device.

X1.3.4 Results were tabulated and analyzed in accordance with Practice E691.

X1.4 Results

X1.4.1 For the three ferrous specimens, results from nine laboratories showed general agreement as to the diagonal sizes. Two other laboratories consistently undersized the indentations (higher hardness) and one laboratory consistently oversized the indentations (lower hardness). This bias was observed with both Vickers and Knoop indentations sized by these laboratories with the degree of bias increasing as the indentation size decreased and the specimen hardness increased. Test on the four nonferrous specimens produced general agreement, but none of the three laboratories that produced biased results for the ferrous specimens measured the nonferrous specimens.

X1.4.2 For the Vickers test data, the calculated hardness increased with increasing force and then became reasonably constant. This trend was apparent in the data from the nine consistent laboratories (ferrous specimens) and for the laboratory that oversized the indentations. The two laboratories that consistently undersized the Vickers indentations exhibited substantial data scatter for the tests with forces of less than 100 gf. However for higher forces, their indentation measurements were relatively constant. The force at which the hardness became relatively constant increased with increasing specimen hardness. For specimens below about 300 HV, there was relatively little difference in HV over the test force range.

X1.4.3 For the Knoop test data, most of the laboratories agreed that the hardness decreased continually with increasing test force and then became reasonably constant. However, the two laboratories that exhibited outlier data for the ferrous specimens did show the opposite trend; this is highly unusual. The difference in HK values between low forces and high forces increased with increasing specimen hardness. For specimens with hardness below about 300 HK, the difference in hardness was quite small over the test force range.

X1.4.4 *Repeatability Interval*—The difference due to test error between two test results in the laboratory on the same material was calculated using the $(S_r)j$ values, the pooled within-laboratory standard deviation. $(S_r)j$ increased with diagonal size and the relationship varied for each material and test type. Table X1.1 lists regression equations that show the relationship between $(S_r)j$ and the diagonal length, µm. The repeatability interval $(I_r)j$, was calculated based on the relationships in Table X1.1. Because the repeatability intervals are also a function of diagonal length, regression equations were also calculated, Table X1.2. The repeatability intervals, in terms of Knoop and Vickers values for ferrous and nonferrous specimens, are shown in Figs. X1.1-X1.4.

X1.4.5 *Reproducibility Interval*—The difference in test results on the same material in different laboratories was calculated using the $(S_R)j$ values, the between-laboratory estimate of precision. $(S_R)j$ increased with diagonal size and the relationship varied for each material and test type. Table X1.3 lists the regression equations that show the relationship between $(S_R)j$ and the diagonal length, µm. The reproducibility intervals $(I_R)j$, were calculated based on the relationships shown in Table X1.3. Because the reproducibility intervals are also a function of diagonal length, regression equations were also calculated, Table X1.4. The reproducibility intervals, in terms of Knoop and Vickers values for the ferrous and nonferrous specimens, are shown in Figs. X1.1-X1.4.

X1.4.6 The within-laboratory and between-laboratory precision values were calculated from $(V_r(\%))j$ and $(V_L(\%))j$ which are the coefficients of variation for within-laboratory and between-laboratory tests. Both are a function of the length of the diagonal. The within-laboratory and between-laboratory precision values were relatively similar for both Vickers and Knoop test data, either ferrous or nonferrous. In general, the repeatability intervals and reproducibility intervals were larger than the precision estimates, particularly at low test forces and high specimen hardness.

Documents
Document Sharing Hub
Full document details: ASTM E384-22