This international standard was developed in accordance with internationally recognized principles on standardization established in the Decision on Principles for the Development of International Standards, Guides and Recommendations issued by the World Trade Organization Technical Barriers to Trade (TBT) Committee.

Designation: E399 – 24

Standard Test Method for Linear-Elastic Plane-Strain Fracture Toughness of Metallic Materials[1]

This standard is issued under the fixed designation E399; the number immediately following the designation indicates the year of original adoption or, in the case of revision, the year of last revision. A number in parentheses indicates the year of last reapproval. A superscript epsilon (ε) indicates an editorial change since the last revision or reapproval.

This standard has been approved for use by agencies of the U.S. Department of Defense.

1. Scope

1.1 This test method covers the determination of fracture toughness (K_{Ic} and optionally K_{Isi}) of metallic materials under predominantly linear-elastic, plane-strain conditions using fatigue precracked specimens having a thickness of 1.6 mm (0.063 in.) or greater[2] subjected to slowly, or in special (elective) cases rapidly, increasing crack-displacement force. Details of test apparatus, specimen configuration, and experimental procedure are given in the annexes. Two procedures are outlined for using the experimental data to calculate fracture toughness values:

1.1.1 The K_{Ic} test procedure is described in the main body of this test standard and is a mandatory part of the testing and results reporting procedure for this test method. The K_{Ic} test procedure is based on crack growth of up to 2 % percent of the specimen width. This can lead to a specimen size dependent rising fracture toughness resistance curve, with larger specimens producing higher fracture toughness results.

1.1.2 The K_{Isi} test procedure is described in Appendix X1 and is an optional part of this test method. The K_{Isi} test procedure is based on a fixed amount of crack extension of 0.5 mm, and as a result, K_{Isi} is less sensitive to specimen size than K_{Ic}. This less size-sensitive fracture toughness, K_{Isi}, is called size-insensitive throughout this test method. Appendix X1 contains an optional procedure for reinterpreting the force-displacement test record recorded as part of this test method to calculate the additional fracture toughness value, K_{Isi}.

NOTE 1—Plane-strain fracture toughness tests of materials thinner than 1.6 mm (0.063 in.) that are sufficiently brittle (see 7.1) can be made using other types of specimens (**1**).[3] There is no standard test method for such thin materials.

1.2 This test method is divided into two parts. The first part gives general recommendations and requirements for testing and includes specific requirements for the K_{Ic} test procedure. The second part consists of Annexes that give specific information on displacement gage and loading fixture design, special requirements for individual specimen configurations, and detailed procedures for fatigue precracking. Additional annexes are provided that give specific procedures for beryllium and rapid-force testing, and the K_{Isi} test procedure, which provides an optional additional analysis procedure for the test data collected as part of the K_{Ic} test procedure.

1.3 General information and requirements common to all specimen configurations:

	Section
Referenced Documents	2
Terminology	3
Stress-Intensity Factor	3.1.1
Plane-Strain Fracture Toughness	3.1.2
Crack Plane Orientation	3.1.4
Summary of Test Method	4
Significance and Use	5
Significance	5.1
Precautions	5.1.1 – 5.1.5
Practical Applications	5.2
Apparatus (see also 1.4)	6
Tension Machine	6.1
Fatigue Machine	6.2
Loading Fixtures	6.3
Displacement Gage, Measurement	6.4
Specimen Size, Configurations, and Preparation (see also 1.5)	7
Specimen Size Estimates	7.1
Standard and Alternative Specimen Configurations	7.2
Fatigue Crack Starter Notches	7.3.1
Fatigue Precracking (see also 1.6)	7.3.2
Crack Extension Beyond Starter Notch	7.3.2.2
General Procedure	8
Specimen Measurements	
Thickness	8.2.1
Width	8.2.2
Crack Size	8.2.3
Crack Plane Angle	8.2.4
Specimen Testing	
Loading Methods	8.3
Loading Rate	8.4
Test Record	8.5
Calculation and Interpretation of Results	9
Test Record Analysis	9.1
P_{max}/P_Q Validity Requirement	9.1.3
Specimen Size Validity Requirements	9.1.4

[1] This test method is under the jurisdiction of ASTM Committee E08 on Fatigue and Fracture and is the direct responsibility of Subcommittee E08.07 on Fracture Mechanics.

Current edition approved Sept. 1, 2024. Published October 2024. Originally approved in 1970. Last previous edition approved in 2023 as E399 – 23. DOI: 10.1520/E0399-24.

[2] For additional information relating to the fracture toughness testing of aluminum alloys, see Practice B645.

[3] The boldface numbers in parentheses refer to the list of references at the end of this standard.

Copyright © ASTM International, 100 Barr Harbor Drive, PO Box C700, West Conshohocken, PA 19428-2959. United States

Documents
Document Sharing Hub
Full document details: ASTM E399-24

	Section
Reporting	10
Precision and Bias	11

1.4 Specific requirements related to test apparatus:

Double-Cantilever Displacement Gage	Annex A1
Testing Fixtures	Annex A2
Bend Specimen Loading Fixture	Annex A2.1
Compact Specimen Loading Clevis	Annex A2.2

1.5 Specific requirements related to individual specimen configurations:

Bend Specimen *SE(B)*	Annex A3
Compact Specimen *C(T)*	Annex A4
Disk-Shaped Compact Specimen *DC(T)*	Annex A5
Arc-Shaped Tension Specimen *A(T)*	Annex A6
Arc-Shaped Bend Specimen *A(B)*	Annex A7

1.6 Specific requirements related to special test procedures:

Fatigue Precracking K_{Ic} and K_{Isi} Specimens	Annex A8
Hot-Pressed Beryllium Testing	Annex A9
Rapid-Force Testing	Annex A10
Determination of K_{Isi}	Appendix X1

1.7 The values stated in SI units are to be regarded as the standard. The values given in parentheses are for information only.

1.8 *This standard does not purport to address all of the safety concerns, if any, associated with its use. It is the responsibility of the user of this standard to establish appropriate safety, health, and environmental practices and determine the applicability of regulatory limitations prior to use.*

1.9 *This international standard was developed in accordance with internationally recognized principles on standardization established in the Decision on Principles for the Development of International Standards, Guides and Recommendations issued by the World Trade Organization Technical Barriers to Trade (TBT) Committee.*

2. Referenced Documents

2.1 *ASTM Standards:*[4]

B909 Guide for Plane Strain Fracture Toughness Testing of Non-Stress Relieved Aluminum Products

B645 Practice for Linear-Elastic Plane-Strain Fracture Toughness Testing of Aluminum Alloys

E4 Practices for Force Calibration and Verification of Testing Machines

E8/E8M Test Methods for Tension Testing of Metallic Materials

E177 Practice for Use of the Terms Precision and Bias in ASTM Test Methods

E456 Terminology Relating to Quality and Statistics

E647 Test Method for Measurement of Fatigue Crack Growth Rates

E691 Practice for Conducting an Interlaboratory Study to Determine the Precision of a Test Method

E1820 Test Method for Measurement of Fracture Toughness

E1823 Terminology Relating to Fatigue and Fracture Testing

E1921 Test Method for Determination of Reference Temperature, T_0, for Ferritic Steels in the Transition Range

E1942 Guide for Evaluating Data Acquisition Systems Used in Cyclic Fatigue and Fracture Mechanics Testing

E3076 Practice for Determination of the Slope in the Linear Region of a Test Record

3. Terminology

3.1 *Definitions:* Terminology E1823 is applicable to this test method:

3.1.1 *stress-intensity factor, K, K_I, K_{II}, K_{III}* [$FL^{-3/2}$]—magnitude of the ideal-crack-tip stress field (a stress-field singularity), for a particular mode of crack displacement, in a homogeneous, linear-elastic body.

3.1.1.1 *K* is a function of applied force and test specimen size, geometry, and crack size, and has the dimensions of force times length$^{-3/2}$.

3.1.1.2 Values of *K* for modes I, II, and III are given as:

$$K_I = \lim_{r \to 0} \left[\sigma_{yy}(2\pi r)^{1/2}\right] \quad (1)$$

$$K_{II} = \lim_{r \to 0} \left[\tau_{xy}(2\pi r)^{1/2}\right] \quad (2)$$

$$K_{III} = \lim_{r \to 0} \left[\tau_{yz}(2\pi r)^{1/2}\right] \quad (3)$$

where *r* is the distance directly forward from the crack tip to the location where the significant stress is calculated.

3.1.2 *plane-strain fracture toughness, K_{Ic} [$FL^{-3/2}$]*—the crack-extension resistance under conditions of crack-tip plane strain in Mode I for slow rates of loading under predominantly linear-elastic conditions and negligible plastic-zone adjustment. The stress intensity factor, K_{Ic}, is measured using the operational procedure (and satisfying all of the validity requirements) specified in Test Method E399, that provides for the measurement of crack-extension resistance at the onset (2% or less) of crack extension and provides operational definitions of crack-tip sharpness, onset of crack extension, and crack-tip plane strain.

3.1.2.1 See also definitions of crack-extension resistance, crack-tip plane strain, and mode in Terminology E1823.

3.1.3 *crack mouth opening displacement (CMOD), V_m* [L]—crack opening displacement resulting from the total deformation (elastic plus plastic), measured under force at the location on a crack surface that has the largest displacement per unit force.

3.1.4 *crack plane orientation*—identification of the plane and direction of crack extension in relation to the characteristic directions of the product. A hyphenated code defined in Terminology E1823 is used wherein the letter(s) preceding the hyphen represents the direction normal to the crack plane and the letter(s) following the hyphen represents the anticipated direction of crack extension (see Fig. 1).

3.1.4.1 *Wrought Products*—the fracture toughness of wrought material depends on, among other factors, the orientation and propagation direction of the crack relative to the

[4] For referenced ASTM standards, visit the ASTM website, www.astm.org, or contact ASTM Customer Service at www.astm.org/contact. For *Annual Book of ASTM Standards* volume information, refer to the standard's Document Summary page on the ASTM website.

AVA Documents Document Sharing Hub

Full document details: ASTM E399-24

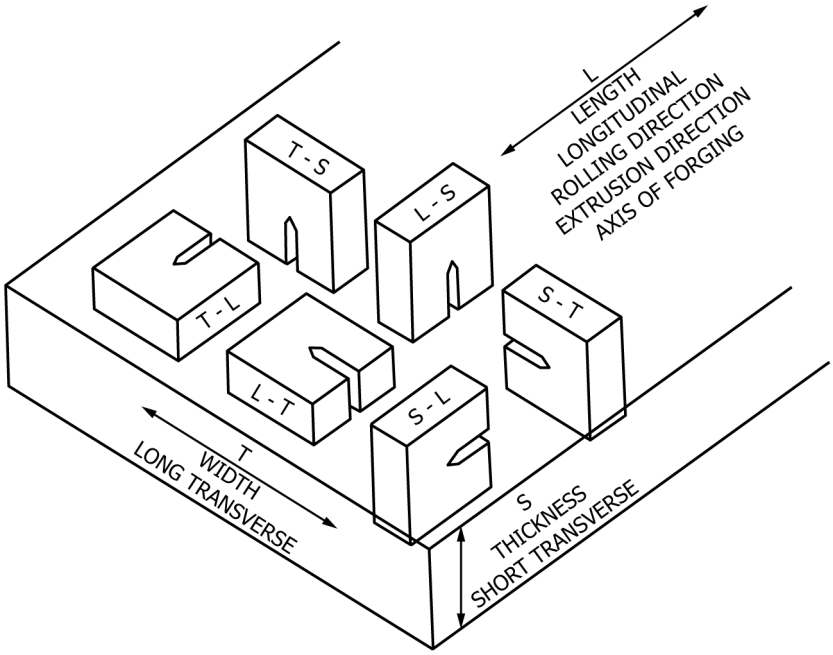

(a) Rectangular Sections—Specimens Aligned with Reference Directions

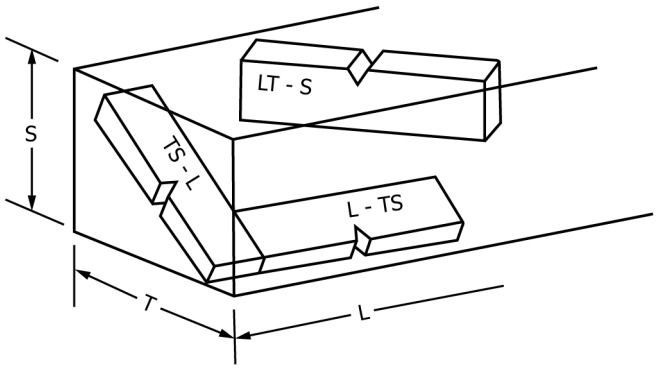

(b) Rectangular Sections—Specimens Not Aligned with Reference Directions

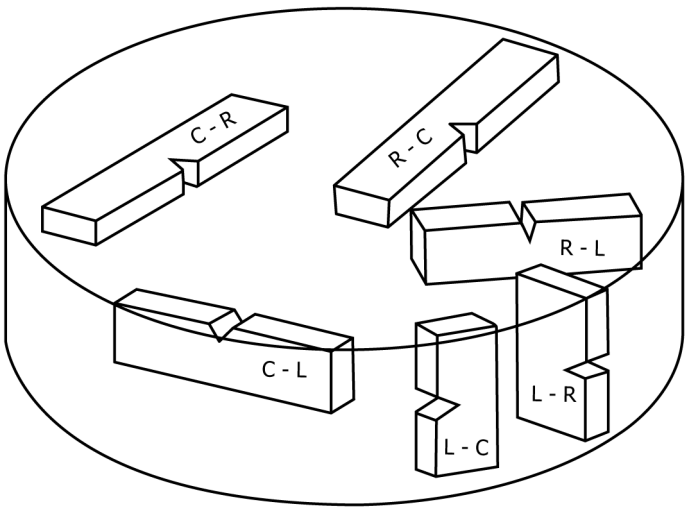

(c) Cylindrical Bars and Tubes

L = direction of maximum grain flow
R = radial direction
C = circumferential or tangential direction

FIG. 1 Crack Plane Identification

Documents
Document Sharing Hub
Full document details: ASTM E399-24

material's anisotropy, which depends, in turn, on the principal directions of mechanical working and grain flow. Orientation of the crack plane shall be identified wherever possible. In addition, product form shall be identified (for example, straight-rolled plate, cross-rolled plate, pancake forging, and so forth) along with material condition (for example, annealed, solution treated plus aged, and so forth). The user shall be referred to product specifications for detailed processing information.

3.1.4.2 For rectangular sections, the reference directions are identified as in Fig. 1(a) and Fig. 1(b), which give examples for rolled plate. The same system is used for sheet, extrusions, and forgings with nonsymmetrical grain flow.

L = direction of principal deformation (maximum grain flow)
T = direction of least deformation
S = third orthogonal direction

3.1.4.3 Using the two-letter code, the first letter designates the direction normal to the crack plane, and the second letter the expected direction of crack propagation. For example, in Fig. 1(a), the T-L specimen fracture plane normal is in the width direction of a plate and the expected direction of crack propagation is coincident with the direction of maximum grain flow (or longitudinal) direction of the plate.

3.1.4.4 For specimens tilted in respect to two of the reference axes as in Fig. 1(b), crack plane orientation is identified by a three-letter code. The designation L-TS, for example, indicates the crack plane to be perpendicular to the principal deformation (L) direction, and the expected fracture direction to be intermediate between T and S. The designation TS-L means that the crack plane is perpendicular to a direction intermediate between T and S, and the expected fracture direction is in the L direction.

3.1.4.5 For cylindrical sections, where grain flow can be in the longitudinal, radial or circumferential direction, specimen location and crack plane orientation shall reference original cylindrical section geometry such that the L direction is always the axial direction for the L-R-C system, as indicated in Fig. 1(c), regardless of the maximum grain flow. Note that this is a geometry based system. As such, the direction of maximum grain flow shall be reported when the direction is known.

NOTE 2—The same system is useful for extruded or forged parts having circular cross section. In most cases the L direction corresponds to the direction of maximum grain flow, but some products such as pancake, disk, or ring forgings can have the R or C directions correspond to the direction of maximum grain flow, depending on the manufacturing method.

L = axial direction
R = radial direction
C = circumferential or tangential direction

3.1.4.6 In the case of complex structural shapes, where the grain flow is not uniform, specimen location and crack plane orientation shall reference host product form geometry and be noted on component drawings.

3.1.4.7 *non-wrought products*—for non-wrought products, specimen location and crack plane orientation shall be defined on the part drawing. The result of a fracture toughness test from a non-wrought product shall not carry an orientation designation.

3.1.4.8 *Discussion*—when products are to be compared on the basis of fracture toughness, it is essential that specimen location and orientation with respect to product characteristic directions be comparable and that the results not be generalized beyond these limits.

3.2 *Definitions of Terms Specific to This Standard:*

3.2.1 *lower bound force of linear region, P_L [F]*—the lower bound force of the fitted range of the best-fit line to the initial linear region of the force-displacement (CMOD) record.

3.2.2 *origin point of linear region, O [L]*—the displacement at zero force of the best-fit line to the initial linear region of the force-displacement (CMOD) record

3.2.3 *stress-intensity factor rate, $\dot{K}$* ($FL^{-3/2}\ t^{-1}$)—change in stress-intensity factor, K, per unit time.

3.2.4 *upper bound force of linear region, P_U [F]*—the upper bound force of the fitted range of the best-fit line to the initial linear region of the force-displacement (CMOD) record.

4. Summary of Test Method

4.1 This test method covers the determination of the plane-strain fracture toughness (K_{Ic}) of metallic materials by increasing-force tests of fatigue precracked specimens. Force is applied either in tension or three-point bending and force versus crack mouth opening displacement (CMOD) is recorded. The force at a 5 % secant offset from the initial slope (corresponding to about 2.0 % apparent crack extension) is established by a specified deviation from the linear portion of the record (**1**). The value of K_{Ic} is calculated from this force using equations that have been established by elastic stress analysis of the specimen configurations specified in this test method. The validity of the K_{Ic} value determined by this test method depends upon the establishment of a sharp-crack condition at the tip of the fatigue crack in a specimen having a size adequate to ensure predominantly linear-elastic, plane-strain conditions. To establish the suitable crack-tip condition, the stress-intensity factor level at which specimen fatigue precracking is conducted is limited to a relatively low value.

4.2 Details of the test specimens and experimental procedures are given in the Annexes. The specimen size required for test validity increases as the square of the material's toughness-to-yield strength ratio. Therefore a range of proportional specimens is provided.

5. Significance and Use

5.1 The property K_{Ic} determined by this test method characterizes the resistance of a material to fracture in a neutral environment in the presence of a sharp crack under essentially linear-elastic stress and severe tensile constraint, such that *(1)* the state of stress near the crack front approaches tritensile plane strain, and *(2)* the crack-tip plastic zone is small compared to the crack size, specimen thickness, and ligament ahead of the crack.

5.1.1 Variation in the value of K_{Ic} can be expected within the allowable range of specimen proportions, *a/W* and *W/B*. K_{Ic} may also be expected to rise with increasing ligament size. Notwithstanding these variations, however, K_{Ic} is believed to represent a lower limiting value of fracture toughness for 2 %

AVA Documents
Document Sharing Hub

Full document details: ASTM E399-24

apparent crack extension) in the environment and at the speed and temperature of the test.

5.1.2 Lower and more highly variable values of fracture toughness can be obtained from specimens that fail by cleavage fracture; for example, specimens of ferritic steels tested at temperatures in the ductile-to-brittle transition region or below. Specimens failing by cleavage are also more likely to exhibit warm prestressing effects, where precracking at a temperature higher than the test temperature can artificially increase the fracture toughness measured (**2**). The present test method is not intended for cleavage fracture. Instead, the user is referred to Test Method E1921 and E1820 which are applicable to cleavage fracture and contain safeguards against warm prestressing. Likewise this test method should not be used when specimen failure is accompanied by appreciable plastic deformation even after the specimen size has been maximized within product dimensional constraints. Guidance on testing elastic-plastic materials is given in Test Method E1820.

5.1.3 The value of K_{Ic} obtained by this test method may be used to estimate the relation between failure stress and crack size for a material in service wherein the conditions of high constraint described above would be expected. Background information concerning the basis for development of this test method in terms of linear elastic fracture mechanics may be found in Refs (**1**) and (**3**).

5.1.4 Cyclic forces can cause crack extension at K_I values less than K_{Ic}. Crack extension under cyclic or sustained forces (as by stress corrosion cracking or creep crack growth) can be influenced by temperature and environment. Therefore, when K_{Ic} is applied to the design of service components, differences between laboratory test and field conditions shall be considered.

5.1.5 Plane-strain fracture toughness testing is unusual in that there can be no advance assurance that a valid K_{Ic} will be determined in a particular test. Therefore, compliance with the specified validity criteria of this test method is essential.

5.1.6 Residual stresses can introduce bias into the indicated K_Q and K_{Ic} value determinations. The effect can be especially significant for specimens removed from as-heat treated or otherwise non-stress relieved stock, from weldments, from complex wrought products, rapidly-solidified castings, additively-manufactured products or from products with intentionally induced residual stresses. In addition, residual stresses will redistribute when the specimen is extracted from the host product and machined. The magnitude of residual stress influence on K_Q and K_{Ic} in the test specimen may be quite different from that in the original or finish machined product. In addition, the behavior of cracks in the full-sized product may not be predictable from the fracture toughness measured on the specimen because of the influence of the different residual stresses in each. Indications of residual stress include distortion during specimen machining, results that are specimen configuration dependent, and irregular fatigue precrack growth (either excessive crack front curvature or out-of-plane growth). Guide B909 provides supplementary guidelines for plane strain fracture toughness testing of aluminum alloy products for which complete stress relief is not practicable. Guide B909 includes additional guidelines for recognizing when residual stresses may be significantly biasing test results, and methods for minimizing the effects of residual stress during testing.

5.2 This test method can serve the following purposes:

5.2.1 In research and development, to establish in quantitative terms significant to service performance, the effects of metallurgical variables such as composition or heat treatment, or of fabricating operations such as welding or forming, on the fracture toughness of new or existing materials.

5.2.2 In service evaluation, to establish the suitability of a material for a specific application for which the stress conditions are prescribed and for which maximum flaw sizes can be established with confidence.

5.2.3 For specifications of acceptance and manufacturing quality control, but only when there is a sound basis for specifying minimum K_{Ic} values, and then only if the dimensions of the product are sufficient to provide specimens of the size required for valid K_{Ic} determination. The specification of K_{Ic} values in relation to a particular application should signify that a fracture control study has been conducted for the component in relation to the expected loading and environment, and in relation to the sensitivity and reliability of the crack detection procedures that are to be applied prior to service and subsequently during the anticipated life.

6. Apparatus

6.1 *Testing Machine and Force Measurement*—The calibration of the testing machine shall be verified in accordance with Practices E4. A data acquisition system shall be used to record force and CMOD for subsequent analysis. The user is referred to Guide E1942 for a detailed discussion of requirements for data acquisition systems.

6.2 *Fatigue Precracking Machine*—When possible, the calibration of the fatigue machine and force-indicating device shall be verified statically in accordance with Practices E4. If the machine cannot be calibrated and verified statically, the applied force shall otherwise be known to ±2.5 %. Careful alignment of the specimen and fixturing is necessary to encourage straight fatigue cracks. The fixturing shall be such that the stress distribution is uniform across the specimen thickness and symmetrical about the plane of the prospective crack.

6.3 *Loading Fixtures*—Fixtures suitable for loading the specified specimen configurations are shown in the Annexes. The fixtures are designed to minimize friction contributions to the measured force.

6.4 *Displacement Gage*—The displacement gage electrical output represents relative displacement (V) of two precisely located gage positions spanning the crack starter notch mouth. Exact and positive positioning of the gage on the specimen is essential, yet the gage must be released without damage when the specimen breaks. Displacement gage and knife-edge designs shall provide for free rotation of the points of contact between the gage and the specimen. A recommended design for a self-supporting, releasable displacement gage is shown in Fig. 2 and described in Annex A1. The gage's strain gage bridge arrangement is also shown in Fig. 2

AVA Documents
Document Sharing Hub

Full document details: ASTM E399-24

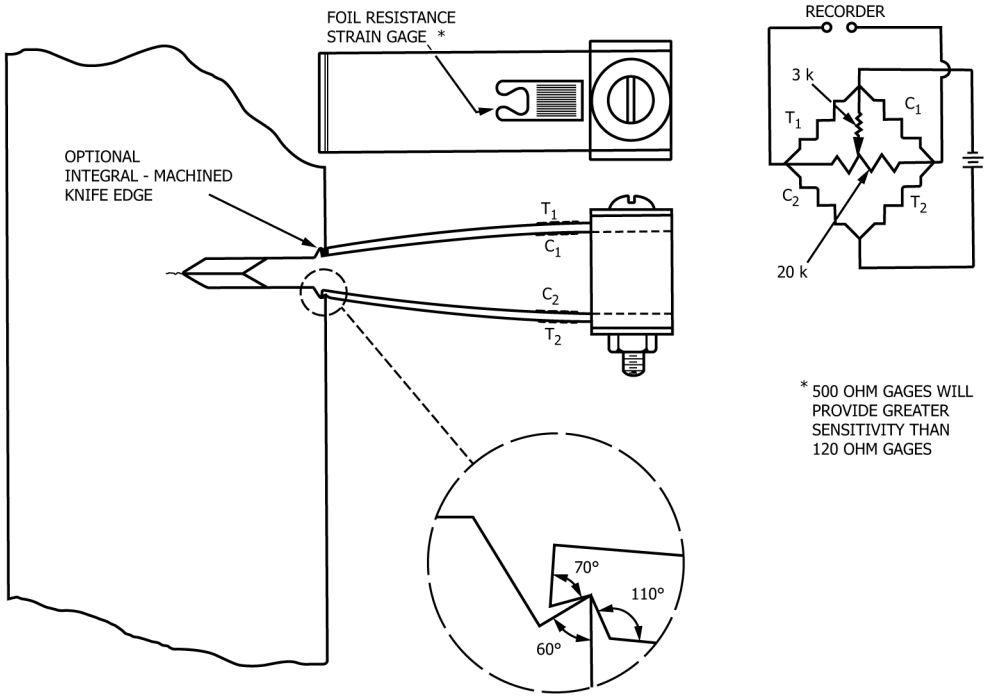

NOTE — Gage details are given in the Annex.

FIG. 2 Double–Cantilever Clip-In Displacement Gage Showing Mounting by Means of Integral Knife Edges (Gage Design Details are Given in Annex A1)

6.4.1 The specimen shall be provided with a pair of accurately machined knife edges to support the gage arms and serve as displacement reference points. The knife edges may be machined integral with the specimen as shown in Figs. 2 and 3, or they may be separate pieces affixed to the specimen. A suggested design for attachable knife edges is shown in Fig. 4. This design features a knife edge spacing of 5 mm (0.2 in.).

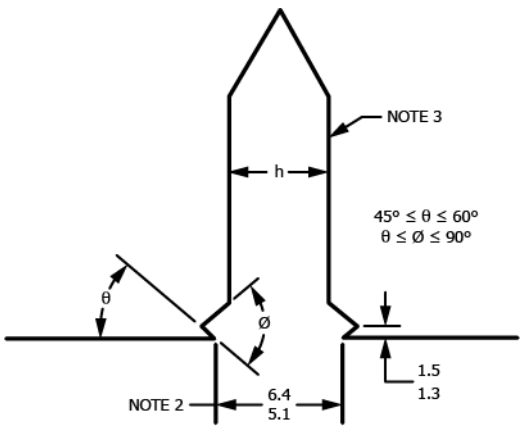

NOTE 1—Dimensions in mm.

NOTE 2— Gage length shown corresponds to clip gage spacer block dimensions shown in Annex A1, but other gage lengths may be used provided they are appropriate to the specimen (see 6.4.3).

NOTE 3—For starter notch configurations see Fig. 5.

Inch-Pound Units Equivalents				
mm	1.3	1.5	5.08	6.35
in.	0.050	0.060	0.200	0.250

FIG. 3 Example of Integral Knife Edge Design

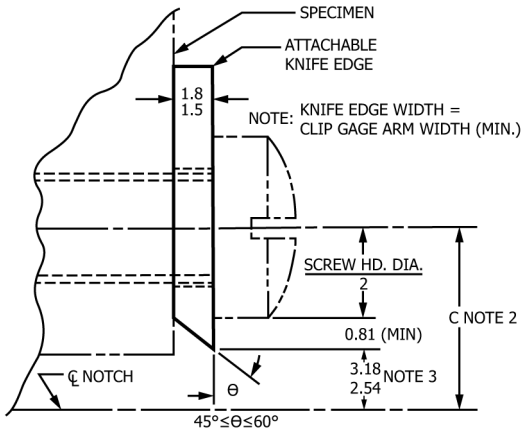

NOTE 1—Dimensions are in mm.

NOTE 2—Effective gage length = $2C$ + Screw Thread Diameter ≤ $W/2$. (This will always be greater than the gage length specified in A1.1.)

NOTE 3—Dimension shown corresponds to clip gage spacer block dimension in Annex A1.

Inch-Pound Units Equvalients					
mm	0.81	1.5	1.8	2.54	3.18
in.	0.032	0.060	0.070	0.100	0.125

FIG. 4 Example of Attachable Knife Edge Design

The effective gage length is established by the points of contact between the screw and the hole threads. For the design shown, the major diameter of the screw is used in setting this gage length. A No. 2 screw will permit the use of attachable knife edges for specimens having $W > 25$ mm (1.0 in.).

6.4.2 Each gage shall be verified for linearity using an extensometer calibrator or other suitable device. The solution

AVA Documents
Document Sharing Hub

Full document details: ASTM E399-24

of the calibrator at each displacement interval shall be within 0.0005 mm (0.00002 in.). Readings shall be taken at ten equally spaced intervals over the working range of the gage (see Annex A1). The verification procedure shall be performed three times, removing and reinstalling the gage in the calibration fixture after each run. The required linearity shall correspond to a maximum deviation of 0.003 mm (0.0001 in.) of the individual displacement readings from a least-squares-best-fit straight line through the data. The absolute accuracy, as such, is not important in this application, since the test method is concerned with relative changes in displacement rather than absolute values (see 9.1). Verification of gage calibration shall be performed at the temperature of test ±5.6 °C (10 °F). The gage shall be verified during the time the gage is in use at time intervals defined by established quality assurance practices. Commercial gages are typically verified annually.

6.4.3 It is not the intent of this test method to exclude the use of other types of gages or gage-fixing devices provided the gage used meets the requirements listed above and provided the gage length does not exceed those limits given in the Annex appropriate to the specimen being tested.

7. Specimen Size, Configurations, and Preparation

7.1 *Specimen Size:*

7.1.1 In order for a result to be considered valid according to this test method (see also 3.1.2.1), the specimen ligament size ($W - a$) must be not less than $2.5(K_{Ic}/\sigma_{YS})^2$, where σ_{YS} is the 0.2 % offset yield strength of the material in the environment and orientation, and at the temperature and loading rate of the test (**1, 4, 5**). For testing at rates other than quasi-static see Annex A10, Rapid Force Testing. The specimen must also be of sufficient thickness, B, to satisfy the specimen proportions in 7.2.1 or 7.2.1.1 and meet the P_{max}/P_Q requirement in 9.1.3. Meeting the ligament size and P_{max}/P_Q requirements cannot be assured in advance. Thus, specimen dimensions shall be conservatively selected for the first test in a series. If the form of the material available is such that it is not possible to obtain a test specimen with ligament size equal to or greater than $2.5(K_{Ic}/\sigma_{YS})^2$, then it is not possible to make a valid K_{Ic} measurement according to this test method.

7.1.2 The initial selection of specimen size for a valid K_{Ic} measurement is often based on an estimated value of K_{Ic} for the material.

7.1.3 Alternatively, the ratio of yield strength to elastic modulus may be used for selecting a specimen size that will be adequate for all but the toughest materials:

σ_{YS}/E	Minimum Recommended Ligament Size	
	mm	in.
0.0050 to 0.0057	76	3
0.0057 to 0.0062	64	2½
0.0062 to 0.0065	51	2
0.0065 to 0.0068	44	1¾
0.0068 to 0.0071	38	1½
0.0071 to 0.0075	32	1¼
0.0075 to 0.0080	25	1
0.0080 to 0.0085	19	¾
0.0085 to 0.0100	13	½
0.0100 or greater	6.4	¼

When it has been established that $2.5(K_{Ic}/\sigma_{YS})^2$ is substantially less than the minimum recommended ligament size given in the preceding table, then a correspondingly smaller specimen can be used.

7.2 *Specimen Configurations*—Recommended specimen configurations are shown in Figs. A3.1-A6.1 and Fig. A7.1.

7.2.1 *Specimen Proportions*—Crack size, a, is nominally between 0.45 and 0.55 times the width, W. Bend specimens can have a width to thickness, W/B, ratio of $1 \leq W/B \leq 4$. Tension specimen configurations can be $2 \leq W/B \leq 4$.

7.2.1.1 *Recommended Proportions*—It is recommended that the thickness, B, is nominally one-half the specimen width, W (that is, $W/B = 2$). Likewise, the crack size, a, should be nominally equal to one-half the width, W (that is $a/W = 1/2$).

NOTE 3—Alternative W/B ratios different from the recommended ratio in 7.2.1.1 but still meeting the requirements in 7.2.1 are sometimes useful, especially for quality control or lot releases purposes, because they allow a continuous range of product thicknesses to be tested using a discrete number of specimen widths while still maintaining specimens of full product thickness. However, because specimen width influences the amount of crack extension corresponding to the 95 % slope, K_{Ic} obtained with alternative W/B ratios may not agree with those obtained using the recommended W/B ratio, particularly in products exhibiting a Type I force-CMOD record (**6**). As an example, a specimen with the recommended proportion $W/B = 2$ would tend to yield a lower K_{Ic} than a specimen with an alternative proportion $W/B = 4$. Also, because a shorter ligament length may hinder resistance curve development, an alternative specimen with $W/B < 2$ (allowed only for bend specimens) may pass the P_{max}/P_Q requirement, while a specimen with the recommended W/B ratio would fail. Conversely, an alternative specimen with $W/B > 2$ (allowed in both tension and bend specimens) may fail the P_{max}/P_Q requirement, while a specimen with the recommended W/B would pass.

7.2.2 *Alternative Specimens*—In certain cases it may be necessary or desirable to use specimens having W/B ratios other than that specified in 7.2.1. Alternative W/B ratios and side-grooved specimens are allowed as specified in 7.2.1.1 and 7.2.2.1. These alternative specimens shall have the same crack length-to-specimen width ratio as the standard specimen.

7.2.2.1 *Alternative Side-Grooved Specimens*—For the compact C(T) and the bend SE(B) specimen configurations side-grooving is allowed as an alternative to plain-sided specimens. The total thickness reduction shall not exceed 0.25 B. A total reduction of 0.20 B has been found to work well (**7**) for many materials and is recommended (10% per side). Any included angle less than 90° is allowed. The root radius shall be 0.5 ± 0.2 mm (0.02 ± 0.01 in.). Precracking prior to the side-grooving operation is recommended to produce nearly straight fatigue precrack fronts. B_N is the minimum thickness measured at the roots of the side grooves. The root of the side groove shall be located along the specimen centerline. Fig. 6 is a schematic showing an example cross section of an alternative side grooved specimen.

NOTE 4— Side-grooves increase the level of constraint with respect to the recommended specimen. The increased constraint promotes a more uniform stress state along the crack front and inhibits shear lip development. As a result, the K_{Ic} value from a side-grooved specimen is expected to be lower than the K_{Ic} obtained from the recommended specimen, particularly for thin products or products exhibiting Type I behavior. The value of K_{Ic} from a side-grooved specimen may better represent the fracture toughness of the material in structural situations where plasticity is more highly constrained by the crack front geometry, such as may be the

AVA Documents Document Sharing Hub

Full document details: ASTM E399-24

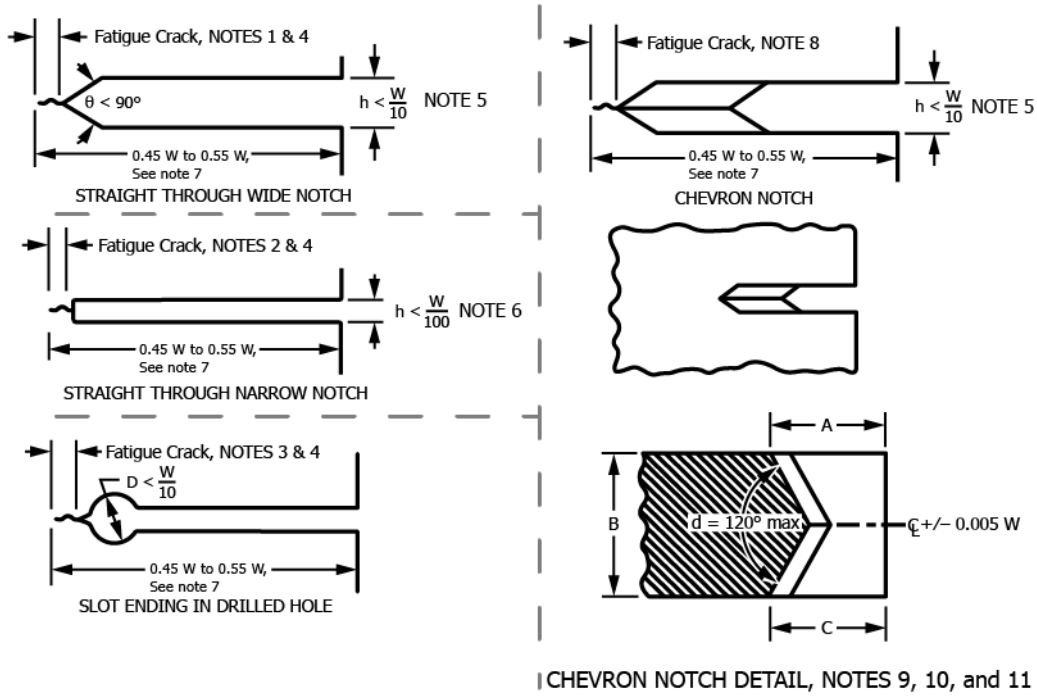

(*a*) Straight-Through Starter Notches and Fatigue Cracks

Note 1—Fatigue crack extension on each surface of the specimen containing a straight-through wide-notch shall be at least 0.025 *W* or 1.3 mm (0.050 in.), whichever is larger.

Note 2—Fatigue crack extension on each surface of the specimen containing a straight-through narrow notch shall be at least 0.0125 *W* or 0.6 mm (0.024 in.), whichever is larger

Note 3—Fatigue crack extension on each surface of the specimen from the stress raiser tipping the hole shall be at least 0.5 *D* or 1.3 mm (0.050 in.), whichever is larger.

Note 4—Crack starter notch shall be perpendicular to the specimen surfaces and parallel to the intended direction of crack propagation within ±2°.

Note 5—Notch height *h* need not be less than 1.6 mm (1⁄16 in.).

Note 6—Notch height *h* need not be less than 0.30 mm (0.012 in.)

Note 7—From notched edge or centerline of loading holes, as appropriate.

(*b*) Chevron Notch and Detail

Note 8—For a chevron crack starter notch the fatigue crack shall emerge on both surfaces of the specimen.

Note 9—A = C within 0.010 *W*.

Note 10—Cutter tip angle 90° max.

Note 11—Radius at chevron notch root 0.25 mm (0.010 in.) max.

FIG. 5 Crack Starter Notch and Fatigue Crack Configurations

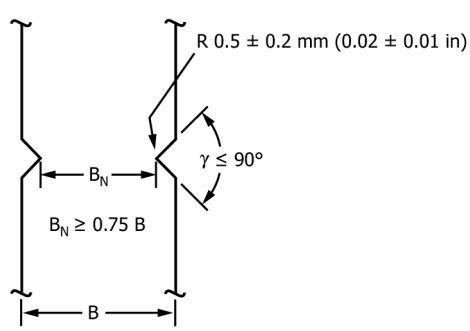

FIG. 6 Schematic of Side Groove Configuration

case for a surface or corner crack, or by structural details such as keyways, radii, notches, etc. The value of K_{Ic} from the recommended specimen may better represent the fracture toughness of the material in structural situations where surface plasticity and shear lip development is not constrained such as a through crack in a region of uniform thickness. Side-grooving increases the likelihood of meeting the P_{max}/P_Q requirement, enabling a valid K_{Ic} to be obtained in products for which it would not be possible using the recommended specimen. Side grooving after precracking beneficially removes a portion of the non-linear crack front at the ends of the crack front, thus increasing the likelihood of meeting crack front straightness requirements. However, side grooving may also remove material that influences service [illegible] is

AVA Documents Document Sharing Hub

Full document details: ASTM E399-24

often true for cast parts and those for which thermo-mechanical working is part of the heat treating cycle. The increased constraint also can lead to increased likelihood of material delamination, for instance, in the plane of the specimen, which could lead to test results different from those obtained from plane-sided specimens.

NOTE 5—No interlaboratory 'round robin' test program has yet been conducted to compare the performance of plain-sided and side-grooved specimens. However, the results of several studies (**7**) indicate that K_{Ic} from side-grooved specimens is zero to 10 % less than that of plain-sided specimens, the difference increasing with increasing material toughness. The within-laboratory repeatability was determined according to the conditions in Terminology E456 and the results are presented in 11.3.

7.2.2.2 For lot acceptance testing, side-grooved specimens shall not be used unless specifically allowed by the product specification or by agreement between producer and user.

7.3 *Specimen Preparation*—All specimens shall be tested in the finally heat-treated, mechanically-worked, and environmentally-conditioned state. Specimens shall normally be machined in this final state. However, for material that cannot be machined in the final condition, the final treatment may be carried out after machining provided that the required dimensions and tolerances on specimen size, shape, and overall finish are met (see specimen drawings of Figs. A3.1-A6.1 and Fig. A7.1), and that full account is taken of the effects of specimen size on metallurgical condition induced by certain heat treatment procedures; for example, water quenching of steels.

7.3.1 *Fatigue Crack Starter Notch*—Four fatigue crack starter notch configurations are shown in Fig. 5. To facilitate fatigue precracking at low stress intensity levels, the suggested root radius for a straight-through wide-slot terminating in a V-notch is 0.08 mm (0.003 in.) or less. A straight-through narrow notch (h < 0.01W) does not need a V-notch or additional sharpening of the notch tip before precracking. For the chevron form of notch, the suggested root radius is 0.25 mm (0.010 in.) or less. For the slot ending in a drilled hole, it is necessary to provide a sharp stress raiser at the end of the hole. Care shall be taken to ensure that this stress raiser is so located that the crack plane orientation requirements of 8.2.4 can be met.

7.3.2 *Fatigue Precracking*—Fatigue precracking is performed by cyclically loading the notched specimen at a ratio of minimum-to-maximum force between -1 and +0.1 for a number of cycles, usually between about 10^4 and 10^6 depending on specimen size, notch preparation, and cyclic stress intensity factor level. Fatigue precracking procedures, limits on maximum stress intensity factor and other requirements are described in detail in Annex A8. Fatigue cycling is continued until a crack is produced that satisfies the requirements of Annex A8, 7.3.2.1, and 7.3.2.2 that follow.

7.3.2.1 Crack size (total size of crack starter plus fatigue crack) shall be between 0.45*W* and 0.55*W*.

7.3.2.2 The size of the fatigue crack on each face of the specimen shall be greater than or equal to the larger of 0.025*W* or 1.3 mm (0.050 in.) for the straight-through, wide-notch crack starter configuration, greater than or equal to the larger of 0.0125 *W* or 0.6 mm (0.024 in.) for the straight-through, narrow-notch crack starter configuration, greater than or equal to the larger of 0.5*D* or 1.3 mm (0.050 in.) for the slot ending in a hole (of diameter $D < W/10$), and need only emerge from the chevron starter configuration.

8. General Procedure

8.1 *Number of Tests*—It is recommended that triplicate tests, minimum, be made for each material condition.

8.2 *Specimen Measurement*—Specimen dimensions shall conform to the drawings of Figs. A3.1-A6.1 and Fig. A7.1. Measurements essential to the calculation of K_{Ic} are specimen thickness, *B* (and in the case of side-grooved alternative specimens, B_N), crack size, *a*, and width, *W*.

8.2.1 Specimen thickness, *B* (and in the case of side-grooved alternative specimens, B_N), shall be measured before testing to a precision equal to or better than 0.03 mm (0.001 in.) or to 0.1 %, whichever is larger. For plain-sided specimens, *B* shall be measured adjacent the notch. For side-grooved specimens, B_N shall be measured at the root of the notch and *B* adjacent the notch.

NOTE 6—For plane-sided specimens the value of B_N is equal to the thickness *B*.

8.2.2 Specimen width, *W*, shall be measured, in conformance with the procedure of the annex appropriate to the specimen configuration, to a precision equal to or better than 0.03 mm (0.001 in.) or 0.1 %, whichever is larger, at not less than three positions near the notch location, and the average value recorded.

8.2.3 Specimen crack size, *a*, shall be measured after fracture to a precision equal to or better than 0.5 % at mid-thickness and the two quarter-thickness points (based on *B* for plain-sided specimens and B_N for side-grooved specimens). The average of these three measurements shall be taken as the crack size, *a*. The difference between any two of the three crack size measurements shall not exceed 10 % of the average. The crack size shall be measured also at each surface. For the straight-through wide-notch starter configuration, no part of the crack front shall be closer to the machined starter notch than 0.025*W* or 1.3 mm (0.050 in.), whichever is larger; and for the narrow-notch starter configuration, no part of the crack front shall be closer to the machined starter notch than 0.0125 *W* or 0.6 mm (0.024 in.), whichever is larger; furthermore, neither surface crack size measurement shall differ from the average crack size by more than 15 % and their difference shall not exceed 10 % of the average crack size. For the chevron notch starter configuration, the fatigue crack shall emerge from the chevron on both surfaces; furthermore, neither surface crack size measurement shall differ from the average crack size by more than 15 %, and their difference shall not exceed 10 % of the average crack size. Measurement locations are schematically illustrated in Fig. 7 for a plain-sided C(T) specimen.

8.2.4 The plane of the fatigue precrack and subsequent 2 % crack extension (in the central flat fracture area; that is, excluding surface shear lips) shall be parallel to the plane of the starter notch to ±10°. For side-grooved specimens, the plane of the fatigue precrack and subsequent 2% crack extension shall be within the root of the side-groove.

8.2.5 There shall be no evidence of multiple cracking (that is, more than one crack) (**8**).

AVA Documents
Document Sharing Hub

Full document details: ASTM E399-24

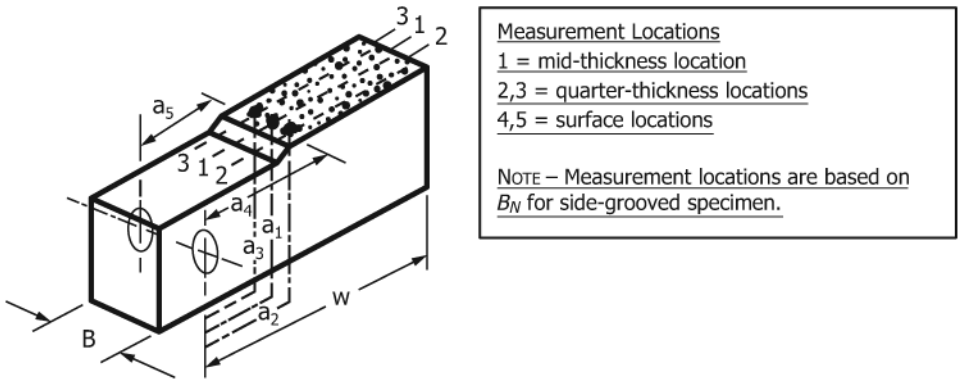

FIG. 7 Crack size measurement locations for plain-sided C(T) specimen.

8.3 *Loading Methods*—Test specimens may be loaded in servo-hydraulic or electro-mechanical test machines. The recommended method of specimen loading is machine crosshead or actuator displacement control. Other displacement-indicating devices, force control, or *K*-control may also be used. Machine instability can occur at specimen pop-in or failure using some loading methods including force control and crack mouth opening displacement (CMOD) gage control. For these methods, setting appropriate machine control limits on force or displacement can prevent potential injury to personnel or damage to the specimen, clevises or test machine.

8.4 *Loading Rate*—For conventional (quasi-static) tests, the specimen shall be loaded such that the stress-intensity factor rate $\dot{K}$ during the initial elastic displacement portion of the test is between 0.55 and 2.75 MPa√m/s (30 and 150 ksi√in./min). Loading rates corresponding to these stress-intensity factor rates are given in the Annex appropriate to the specimen configuration being tested. If the initial rate is estimated by loading and unloading the specimen prior to the test, K_{max} shall not exceed 60 % of K_Q or K_{Qsi} determined in the subsequent test. Loading and unloading shall be performed at the test temperature and using the same apparatus as the test. For rapid-force tests, loading rates are to be as specified in Annex A10.

8.5 *Test Record*—A record shall be made of the output of the force-sensing transducer versus the output of the displacement gage. The data acquisition system shall be set such that not less than 50 % of full range is used for the test record. The data acquisition system shall capture enough data to permit the calculations of Section 9.

8.5.1 The test shall be continued until the specimen can sustain no further increase in applied force. The maximum force (P_{max}) shall be noted and recorded.

9. Calculation and Interpretation of Results

9.1 *Interpretation of Test Record and Calculation of K_{Ic}*—In order to substantiate the validity of a K_{Ic} determination, it is first necessary to calculate a conditional result, K_Q, and then to determine whether this result is consistent with the size and yield strength of the specimen according to 7.1. The procedure is as follows:

9.1.1 The conditional value P_Q is determined by the secant line OP_5, (see Fig. 8) through the origin (point *O*) of the test record with slope $(P/V)_5$ equal to $0.95(P/V)_o$, where $(P/V)_o$ is the slope of the tangent *OA* to the initial linear portion of the record between the lower bound force (P_L) and the upper bound force (P_U), inclusive (Note 7). In practice the origin (point *O*) is not necessarily at the intersection of the displacement and force axes. The point *O* lies on the best fit line through the initial linear portion of the record and at the intersection of the best fit line with the displacement axis. Thus, in calculating the secant line OP_5, the rotation point of the slope adjustment should be at the intersection of the line *OA* with the displacement axis. The force P_Q is then defined as follows: if the force at every point on the record which precedes P_5 is lower than P_5 (Fig. 8, Type I), then P_5 is P_Q; if, however, there is a maximum force preceding P_5 which exceeds it (Fig. 8, Types II and III), then this maximum force is P_Q.

NOTE 7—Slight initial nonlinearity of the test record is frequently observed, and is to be ignored. However, it is important to establish the initial slope of the record with high precision. Therefore it is advisable to minimize this nonlinearity by preliminarily loading the specimen to a maximum force corresponding to a stress-intensity factor level not exceeding that during final crack extension of fatigue precracking, then unloading.

9.1.2 The algorithms for determining the lower bound force (P_L) and the upper bound force (P_U) of the fitted range of the best-fit line to the initial linear region and its slope $(P/V)_o$, the origin point (*O*), P_5, P_Q and P_{max} are discretionary. One recommended method for determining the initial linear region is described in Practice E3076. For any method employed, performing the fit quality metrics in Practice E3076 is recommended

9.1.3 The ratio P_{max}/P_Q, where P_{max} is the maximum force the specimen was able to sustain (see 8.4.1), shall be calculated. If this ratio does not exceed 1.10, proceed to calculate K_Q as described in the Annex appropriate to the specimen configuration. If P_{max}/P_Q does exceed 1.10, then the test is not a valid K_{Ic} test and the user is referred to Test Method E1820 on elastic-plastic fracture toughness.

9.1.4 The value $2.5(K_Q/\sigma_{YS})^2$, where σ_{YS} is the 0.2 % offset yield strength in tension (see Test Method E8/E8M), shall be

AVA Documents
Document Sharing Hub

Full document details: ASTM E399-24

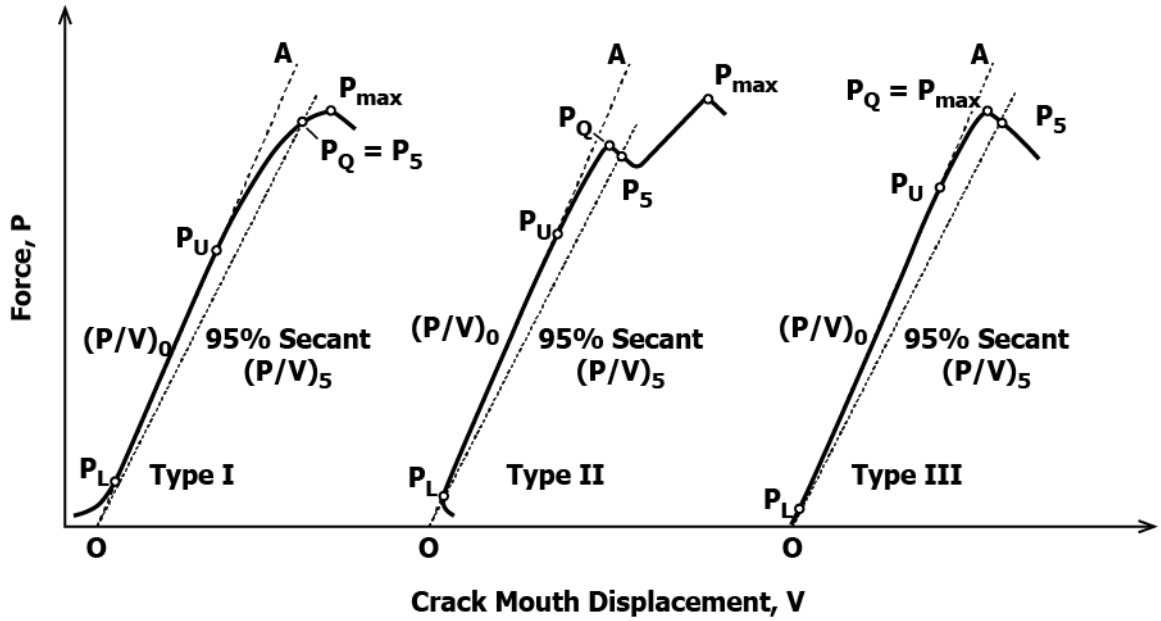

FIG. 8 Principal Types of Force-Displacement (CMOD) Records

calculated. If this quantity is less than the specimen ligament size, $W–a$ then K_Q is equal to K_{Ic}, provided all other validity requirements are met. Otherwise, the test is not a valid K_{Ic} test. Expressions for calculating K_Q are given in the Annexes for each specified specimen configuration.

9.1.5 If the test result fails to meet the requirements of 9.1.3 or 9.1.4, or both, it will be necessary to use a larger specimen to determine K_{Ic}.

9.2 *Alternative Interpretation of Test Data*—Appendix X1 contains an optional procedure for reinterpreting the force-displacement test record recorded as part of this test method to calculate an additional fracture toughness value, K_{Isi}. The K_{Isi} test method has been shown to be less sensitive to specimen size than K_{Ic}, and experience has shown that valid K_{Isi} measurement is often possible using a smaller specimen size than that required to obtain a valid K_{Ic} (X1.1 and X1.2).

9.3 *Qualification of Data*—A test result shall meet all applicable requirements in the body of the standard and the annexes for the tested specimen configuration to qualify as a valid K_{Ic} test result. The following is a listing of the main requirements for specimen size and proportions, the fatigue precrack, crack plane symmetry, the rate of force application and where they can be found in the standard (in parentheses).

9.3.1 *Specimen Size and Proportions:*

9.3.1.1 Width to thickness (W/B) ratio: $1 \leq W/B \leq 4$ for bend specimen configurations and $2 \leq W/B \leq 4$ for tension specimens configurations (7.2.1 and Annex A3 – Annex A7).

9.3.1.2 Crack size to width (a/W) ratio (including fatigue precrack): Between $0.45W$ and $0.55W$ (7.2.1, Fig. 5, 7.3.2.1 and A8.3.5).

9.3.1.3 Specimen thickness (B): Sufficient to meet $P_{max}/P_Q \leq 1.10$ (7.1.1 and 9.1.3).

9.3.1.4 Specimen ligament size: $(W\text{-}a) \geq 2.5\ (K_Q/\sigma_{YS})^2$ (7.1.1 and 9.1.4).

9.3.1.5 Additional specimen size requirements for alternative side-grooved specimens:

(1) Side-grooved specimen notch root thickness (B_N): $(B - B_N) \leq 0.25\ B$ (7.2.2.1).

(2) Side-grooved notch root radius: 0.5 ± 0.2 mm (0.02 ± 0.01 in.) (7.2.2.1).

9.3.2 *Fatigue Precrack:*

9.3.2.1 Maximum K for initial crack extension: $K_{max} \leq 80\%\ K_Q$ (A8.3.7.1).

9.3.2.2 Maximum K for final crack extension: $K_{max} \leq 60\%\ K_Q$ (A8.3.7.2).

9.3.2.3 Maximum K for final crack extension: $K_{max}/E \leq 0.0003\sqrt{m}$ ($0.002\ \sqrt{in}$) (A8.3.7.2).

9.3.2.4 Minimum fatigue crack extension from notch (7.3.2.2 and 8.2.3):

(1) Straight-through, wide notch: Fatigue crack extension greater than or equal to the larger of $0.025W$ or 1.3 mm (0.050 in.);

(2) Straight-through, narrow notch: Fatigue crack extension greater than or equal to the larger of $0.0125W$ or 0.6 mm (0.024 in.);

(3) Slot ending in a hole: Fatigue crack extension greater than or equal to the larger of $0.5D$ or 1.3 mm (0.050 in.);

(4) Chevron notch: Fatigue crack emerging on both sides of specimen.

9.3.2.5 Crack front straightness (8.2.3):

(1) Mid-thickness and two quarter points: Difference between any two of the three interior crack size measurements shall not exceed 10% of the average crack size (a);

(2) Surface: Neither surface crack size measurement shall differ from the average crack size (a) by more than 15%;

(3) Surface: The difference between the surface crack size measurements shall not exceed 10% of the average crack size (a).

AVA Documents
Document Sharing Hub

Full document details: ASTM E399-24

9.3.3 *Crack Plane Symmetry:*

9.3.3.1 Plain-sided specimen: Fatigue precrack plane and subsequent 2 % crack extension (in the central fracture area excluding shear lips) parallel to the plane of starter notch to ± 10° (8.2.4).

9.3.3.2 Side-grooved specimen: Fatigue precrack plane and subsequent 2% crack extension within the root of the side-groove (8.2.4).

9.3.3.3 No evidence of multiple cracking (more than one crack) (8.2.5).

9.3.4 *Rate of Force Application:*

9.3.4.1 Conventional (Quasi-static): K-rate between 0.55 and 2.75 MPa√m/s (30 and 150 ksi√in/s) (8.4).

10. Report

10.1 The specimen configuration code shown on the specimen drawing (in the appropriate Annex) shall be reported. This code shall be followed with the loading code (T for tension, B for bending) and the code for crack plane orientation (see 3.1.4). The latter two codes shall appear in separate parentheses. As an example, a test result obtained using the compact specimen (see Annex A4) might be designated as follows: C(T)(S-T). The first letter (C) indicates the specimen to be a compact configuration. The second letter (T) denotes the loading as tension. The first of the two letters in the last bracket (S) indicates the normal to the crack plane to be normal to the direction of principal deformation. The second of these letters (T) indicates the intended direction of crack extension to be parallel with the direction of least deformation. For cylindrical sections, where grain flow can be in the longitudinal, radial or circumferential direction, the direction of maximum grain flow shall be reported when the direction is known (see 3.1.4).

10.2 The following information shall be additionally reported for each specimen tested:

10.2.1 Characterization of the material (alloy code or chemistry and metallurgical condition) and product form (sheet, plate, bar, forging, casting, and so forth) tested.

10.2.2 Specimen thickness, B, for plain-sided configurations. For side-grooved specimens, B, B_N and $(B \cdot B_N)^{1/2}$.

10.2.3 Specimen width (depth), W.

10.2.3.1 Loading hole offset, X, for the arc-shaped tension specimen.

10.2.3.2 Outer and inner radii, r_2 and r_1, for arc-shaped specimens.

10.2.4 Fatigue precracking conditions, specifically the maximum stress-intensity factor, K_{max}, and the stress ratio, R, for the final 0.00625W of crack extension for the straight-through narrow notch configuration, and final 0.0125W of crack extension for other crack starter configurations. Fatigue precracking temperature shall be reported if different than room temperature.

10.2.4.1 When a compressive preload is applied to the specimen before fatigue precracking, report $|K_{cp}|$.

10.2.5 Crack size measurements, after fracture, at mid-thickness and the two quarter-thickness positions on the crack front, as well as at the intersection of the crack front with the specimen surface.

10.2.6 Test temperature.

10.2.7 Loading rate in terms of $\dot{K}_I$ (change in stress-intensity factor per unit time) (**3**).

10.2.8 Force (P)-versus-crack mouth opening displacement (CMOD) record and associated values P_5, P_Q, P_{max}, and the slope $(P/V)_o$ of the best-fit line to the linear region. Optionally, the displacement value at the origin point (O), the values corresponding to the lower bound force (P_L) and upper bound force (P_U) of the fitted range of the best-fit line to the initial linear region may be reported as further verification of a good fit in the linear region. The fit quality metrics in Practice E3076 may also be reported.

10.2.9 Yield strength as determined by Test Methods E8/E8M.

10.2.10 K_{Ic} (or, K_Q followed by the parenthetical statement "invalid according to Sections(s) _____ of Test Method E399").

10.2.11 P_{max}/P_Q.

11. Precision and Bias

11.1 The precision of K_{Ic} measurements has been examined in several interlaboratory round-robin studies. Selected aluminum alloys and high-strength steels were tested using standard bend SE(B) (**9**), compact C(T) (**10**), and arc-shaped tension A(T) (**11**) specimen configurations. The results are summarized in 11.3 (Precision) and 11.5 (Bias) that follow. Not all of the results reported satisfied all of the validity requirements of this test method. Statistical analysis (**10, 11, 12**) was used to exclude data that were likely influenced by deviations from the validity requirements. No round-robin program has been conducted for the disk-shaped compact DC(T) specimen configuration, but limited data for that specimen configuration are compared with data for other specimen configurations in Annex A5. Round-robin studies specific to the quasi-static testing of beryllium and the dynamic testing of a strain-rate sensitive steel, and which involved special testing procedures, are presented in Annex A9 and Annex A10.

11.2 It should be emphasized that the measures of precision given in Table 1, Table 2, and Table 3 apply to alloys that essentially exhibited no transitional fracture behavior with temperature or strain rate under the specific test conditions of the interlaboratory studies.

11.3 *Precision*—The precision of K_{Ic} determination is affected by errors in the measurement of test force and specimen dimensions, especially the crack size. This test method specifies a precision for each measured quantity and, based on these specifications and the round-robin results, a theoretical precision is rendered (**13**). Analysis of the method's specifications suggests that precision decreases with increasing relative crack size, more for the bend than for the compact configuration. In practice, the precision of K_{Ic} measurement may depend to an unknown extent on the characteristics of the test record and analysis skills of the laboratory personnel. It is possible to derive useful information concerning the precision of K_{Ic} measurement from three round-robin programs (**10, 11, 12**) as described below. Results for bend, compact, and arc-shaped specimen configurations were obtained for several aluminum alloys and high strength steels. The materials were chosen for their reproducible, uniform composition and microstructure.

AVA Documents
Document Sharing Hub

Full document details: ASTM E399-24