Designation: E488/E488M – 15

Standard Test Methods for Strength of Anchors in Concrete Elements[1]

This standard is issued under the fixed designation E488/E488M; the number immediately following the designation indicates the year of original adoption or, in the case of revision, the year of last revision. A number in parentheses indicates the year of last reapproval. A superscript epsilon (ε) indicates an editorial change since the last revision or reapproval.

This standard has been approved for use by agencies of the U.S. Department of Defense.

1. Scope

1.1 These test methods address the tensile and shear strengths of post-installed and cast-in-place anchors in test members made of cracked or uncracked concrete. Loadings include quasi-static, seismic, fatigue and shock. Environmental exposures include freezing and thawing, moisture, decreased and elevated temperatures and corrosion. These test methods provide basic testing procedures for use with product-specific evaluation and acceptance standards and are intended to be performed in a testing laboratory. Product-specific evaluation and acceptance standards may add specific details and appropriate parameters as needed to accomplish the testing. Only those tests required by the specifying authority need to be performed.

1.2 These test methods are intended for use with post-installed and cast-in-place anchors designed for installation perpendicular to a plane surface of a test member.

1.3 This standard prescribes separate procedures for static, seismic, fatigue and shock testing. Nothing in this standard, however, shall preclude combined tests incorporating two or more of these types of loading (such as seismic, fatigue and shock tests in series).

1.4 Both inch-pound and SI units are provided in this standard. The testing may be performed in either system and reported in that system and the results converted to the other. However, anchor diameters, threads, and related testing equipment shall be in accordance with either inch-pound or SI provisions.

1.5 *This standard does not purport to address all of the safety concerns, if any, associated with its use. It is the responsibility of the user of this standard to establish appropriate safety and health practices and determine the applicability of regulatory limitations prior to use.*

2. Referenced Documents

2.1 *ASTM Standards:*[2]

C31/C31M Practice for Making and Curing Concrete Test Specimens in the Field
C33/C33M Specification for Concrete Aggregates
C39/C39M Test Method for Compressive Strength of Cylindrical Concrete Specimens
C42/C42M Test Method for Obtaining and Testing Drilled Cores and Sawed Beams of Concrete
C150/C150M Specification for Portland Cement
C330/C330M Specification for Lightweight Aggregates for Structural Concrete
E4 Practices for Force Verification of Testing Machines
E8/E8M Test Methods for Tension Testing of Metallic Materials
E468 Practice for Presentation of Constant Amplitude Fatigue Test Results for Metallic Materials
E575 Practice for Reporting Data from Structural Tests of Building Constructions, Elements, Connections, and Assemblies
E631 Terminology of Building Constructions
E2265 Terminology for Anchors and Fasteners in Concrete and Masonry
F606/F606M Test Methods for Determining the Mechanical Properties of Externally and Internally Threaded Fasteners, Washers, Direct Tension Indicators, and Rivets
F1624 Test Method for Measurement of Hydrogen Embrittlement Threshold in Steel by the Incremental Step Loading Technique
G5 Reference Test Method for Making Potentiodynamic Anodic Polarization Measurements

2.2 *ANSI Standards:*[3]

ANSI B212.15 American National Standard for Cutting Tools—Carbide-Tipped Masonry Drills and Blanks for Carbide-Tipped Masonry Drills

[1] These test methods are under the jurisdiction of ASTM Committee E06 on Performance of Buildings and are the direct responsibility of Subcommittee E06.13 on Structural Performance of Connections in Building Construction.

Current edition approved April 15, 2015. Published May 2015. Originally approved in 1976. Last previous edition approved in 2010 as E488/E488M – 10. DOI: 10.1520/E0488_E0488-15.

[2] For referenced ASTM standards, visit the ASTM website, www.astm.org, or contact ASTM Customer Service at service@astm.org. For *Annual Book of ASTM Standards* volume information, refer to the standard's Document Summary page on the ASTM website.

[3] Available from American National Standards Institute (ANSI), 25 W. 43rd St., 4th Floor, New York, NY 10036, http://www.ansi.org.

Copyright © ASTM International, 100 Barr Harbor Drive, PO Box C700, West Conshohocken, PA 19428-2959. United States

Documents
Document Sharing Hub
Full document details: ASTM E488/E488M-15

3. Terminology

3.1 *Definitions:*

3.1.1 For definitions of general terms related to building construction used in this standard, refer to Terminology E631, and for definitions of terms related to anchoring, refer to Terminology E2265.

3.2 *Definitions of Terms Specific to This Standard:*

3.2.1 *load-controlled undercut anchor, n*—a post-installed anchor that derives its tensile holding strength by the mechanical interlock provided by installing the anchor by tensioning, which causes the sleeve to expand into the predrilled undercut.

3.2.2 *post-installed anchor, n*—an anchor that is installed after the placement and hardening of concrete.

3.2.3 *run-out, n*—a condition in which failure does not occur within the specified number of load cycles in a fatigue test.

3.2.4 *standard temperature, n*—73°F [23°C] ± 8°F [6°C].

3.2.5 *test member, n*—the base material in which the anchor is installed and which resists forces from the anchor.

3.3 *Symbols:*

c_a = distance from the center of an anchor shaft to the edge of test member, in. [mm].
c_{min} = minimum distance from the center of an anchor shaft to the edge of test member, determined from tests, in. [mm].
d = nominal diameter of anchor to be tested, in. [mm].
d_{fix} = diameter of hole in shear sleeve, ≥d, in. [mm].
d_{hole} = diameter of drilled borehole in test specimen, in. [mm].
d_m = diameter of carbide-tipped drill bit with diameter on low end of tolerance range for new bit, representing moderately used bit, in. [mm].
d_{max} = diameter of carbide-tipped drill bit with diameter on high end of tolerance range for new bit, representing bit as large as would be expected in use, in. [mm].
d_{min} = diameter of carbide-tipped drill bit with diameter below low end of tolerance range for new bit representing a well-used bit, in. [mm].
d_o = outside diameter of post-installed anchor, in. [mm].
$d_{opening}$ = diameter of hole in confining plate for confined tension tests, in. [mm].
F_{cr} = crack-inducing force, applied to reinforcing bars, lb [N].
f'_c = specified concrete compressive strength, psi [MPa].
$f'_{c,ref}$ = specified compressive strength of reference concrete test member, psi [MPa].
$f'_{c,test}$ = specified compressive strength of concrete test member, psi [MPa].
h_{ef} = effective embedment depth, measured from the concrete surface to the deepest point at which the anchor tension load is transferred to the concrete, in. [mm].
h_{min} = minimum member thickness, in. [mm].
h_{nom} = distance between embedded end of concrete screw and concrete surface, in. [mm].
n_{ct} = number of test cycles.
n_{pt} = number of permitted pretest crack cycles.
$N_{p,cr}$ = characteristic pullout resistance in cracked concrete for the minimum specified concrete strength of 2500 psi [17 MPa], as determined from tests in cracked concrete, lb [N].
$N_{st,mean}$ = mean ultimate steel capacity determined from tensile tests on full-sized anchor specimens, lb [N].
$N_{sust,l}$ = sustained load, lb [N].
$N_{sust,con}$ = sustained load used for confined reference tests, lb [N].
$N_{sust,ft}$ = specified constant tension load, lb [N].
$N_{u,con,mean}$ = mean ultimate load determined from confined reference tests, lb [N].
$N_{u,mean}$ = mean ultimate load determined from tests, lb [N].
N_w = tensile load in tests of anchors located in cracks whose opening width is cycled, lb [N].
s_{min} = minimum anchor spacing, determined from test, in. [mm].
t_{fix} = effective thickness of shear sleeves (see d), in. [mm].
t_{pl} = thickness of confining plate for tension tests, ≥d, in. [mm].
T_{inst} = specified or maximum setting torque for expansion or prestressing of an anchor, ft·lb [N·m].
T_{screw} = specified maximum setting torque to prevent anchor failure during installation, ft-lb [N-m].
W_1 = largest crack width during test, in. [mm].
W_2 = smallest crack width during test, in. [mm].
W_3 = largest crack width at beginning of test, in. [mm].
ℓ_{side} = side length of test cube, in. [mm].

4. Significance and Use

4.1 These test methods are intended to provide reproducible data from which acceptance criteria, design data, and specifications can be developed for anchors intended to be installed in concrete.

5. Apparatus

5.1 *Testing Equipment:*

5.1.1 *General*—Use calibrated electronic load and displacement measuring devices meeting the specified sampling rate. Use load-measuring equipment with an accuracy of ±1 % of the anticipated ultimate load and calibrated in accordance with Practices E4. Use displacement measuring devices with an accuracy of ±0.001 in. [±0.025 mm] and crack-width measuring devices with an accuracy of ±0.0005 in. [±0.013 mm]. For recording load and displacement measurements, use a data-acquisition system capable of recording at least 120 data points per instrument for each individual test, prior to reaching peak load. The testing equipment shall have sufficient capacity to prevent yielding of its components under the anticipated ultimate load, and shall have sufficient stiffness to ensure that the applied tension loads remain parallel to the axis of the

AVA Documents
Document Sharing Hub

Full document details: ASTM E488/E488M-15

anchors and that the applied shear loads remain parallel to the surface of the test member during testing.

5.1.2 *Tension Test Equipment*—The support for the tension test equipment shall be of sufficient size to prevent failure of the surrounding test member. The loading rod shall be of sufficient diameter to develop the anticipated ultimate strength of the anchorage hardware with an elastic elongation not exceeding 10 % of the anticipated elastic elongation of the anchor, and shall be attached to the anchorage system by a connector that will minimize the direct transfer of bending stress to the anchor. The displacement measuring device(s) shall be positioned to measure the movement of the anchors with respect to points on the test member so that the device is not influenced during the test by deflection or failure of the anchor or test member. See Fig. 1 and Fig. 2 for examples of typical test setups.

NOTE 1—Other support geometries are acceptable.

Table 1 gives the minimum required clear distance from the test support to the anchor for tension and shear loading.

5.1.3 *Shear Test Equipment*—Position the displacement-measuring device(s) to measure displacement in the direction of the applied load only. Place the device on the test member so that the sensing element bears perpendicularly on the anchor or on a contact plate located on the loading plate, or use another method that restricts deflections other than those in the direction of the applied load. See Fig. 4 for a typical example of a shear test setup. For tests on anchor groups, the axis of the displacement-measuring device shall coincide with the centroid of the group. Table 1 gives the minimum required clear distance from the test support to the anchor shear loading toward a free edge.

5.2 *Group Test Equipment*—Measure the simultaneous displacement of all anchors or groups of anchors tested. Only one set of displacement-measuring devices is required for a group of anchors. Displacement measurements as described in 5.1.1 include components of deformation not directly associated with displacement of the anchor relative to the test member, such as elastic elongation of the loading rod, deformation of the loading plate, sleeves, shims, attachment hardware, and local test member material. Using supplementary measuring devices or calibration test data for the installed test set-up with a rigid anchor replacing the anchor to be tested, identify such deformation components and subtract them from the total measured displacement. To evaluate the findings, use the average displacement indicated by the instruments in each group.

5.3 *Loading Plates:*

5.3.1 For tension loading the plate thickness t_{fix} in the immediate vicinity of the test anchor shall be equal to or greater than the nominal anchor diameter to be tested.

5.3.2 For shear testing the plate thickness t_{fix} in the immediate vicinity of the test anchor shall be equal to the nominal anchor diameter to be tested, –1⁄16 +1⁄8 in. [–1.5 +3.0 mm]. The hole in the loading plate shall have a diameter of 0.06 ± 0.03 in. [3.0 ± 1.5 mm] greater than the specified diameter of the test anchor unless another diameter is specified. The shape of the hole in the loading plate shall correspond to that of the anchor cross section. When sleeve inserts of the required diameter are used they shall be periodically inspected and replaced to meet these requirements and prevent eccentric loading of sleeve. See Fig. 5 for a representative shear plate with sleeves. The contact area between the loading plate through which the anchor is installed and the test member shall be as given in Table 2, unless otherwise specified. Chamfer or smooth the edges of the loading plate so that it does not dig into the concrete. Place a sheet of polytetrafluoroethylene (PTFE) or other friction-limiting materials with a minimum thickness of 0.020 in. [0.5 mm] between the loading plate and base

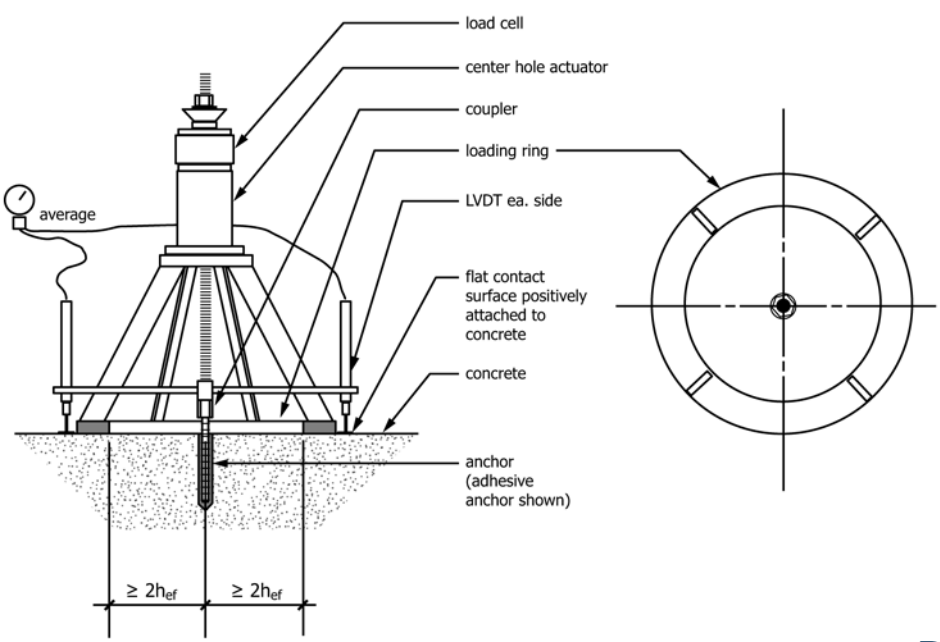

FIG. 1 Example of Unconfined Tension Test Setup – Displacement Measurement with Dual LVDTs

AVA Documents
Document Sharing Hub

Full document details: ASTM E488/E488M-15

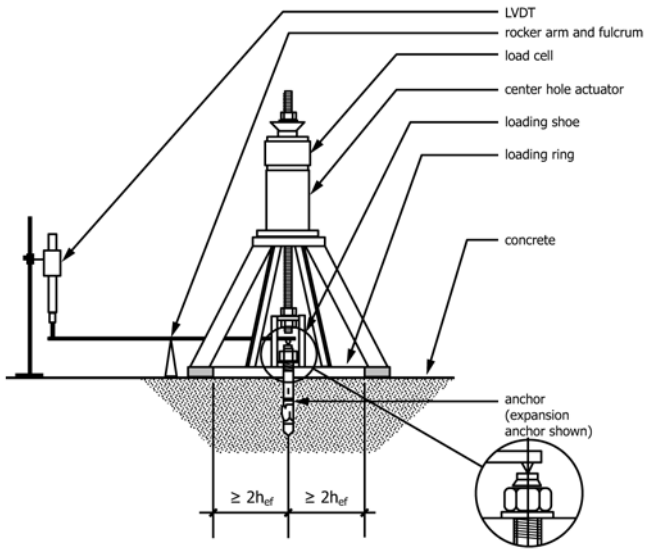

FIG. 2 Example of Unconfined Tension Test Setup – Displacement Measurement from top of Anchor

TABLE 1 Minimum Clearance Requirements for Test Equipment Supports

All Anchors	
Spacing Between Test Supports	Distance from Anchor to Edge of Test Support
Tension Loads	
4.0 h_{ef}	2.0 h_{ef}
Shear Loads	
4.0 c_a	2.0 c_a

material surface. The friction-limiting material shall prevent contact of the loading plate with the base material.

5.4 *Unconfined and Confined Test Equipment:*

5.4.1 *Unconfined Tests*—Fig. 1 and Fig. 2 show a typical unconfined tension test setup with supports spaced as required to permit the unrestricted development of a conical concrete fracture surface. The values given in Table 1 for required clearances between the anchor and the test support shall be considered to satisfy this requirement.

5.4.2 *Confined Tests*—Fig. 3 shows a typical confined tension test setup for anchors, in which the reaction force is transferred into the concrete close to the anchor. The confining plate shall have a hole with diameter between 1.5 d_{hole} and 2.0 d_{hole}, and a thickness $t_{fix} \geq d$. Place a sheet of polytetrafluoroethylene (PTFE) or other friction-limiting materials with a minimum thickness of 0.020 in. [0.5 mm] between the loading plate and base material surface. The friction-limiting material shall prevent contact of the confining plate with the base material.

5.5 *Cracked Concrete Testing:*

5.5.1 *Equipment for Controlling Cracks*—The test apparatus shall be capable of controlling the crack width. A typical tension test setup for cracked concrete is shown in Fig. 6.

NOTE 2—Fig. 6 shows testing of multiple anchors. Smaller test members can be used for testing single anchors.

6. Test Specimens

6.1 *Anchorage System*—The anchors or anchorage system shall be representative of the type and lot to be used in field construction, and shall include the attachment hardware normally required for use.

6.2 *Test Member*—The requirements of the test member in which the anchor is to be embedded and tested shall be specified. The location and orientation of any reinforcement embedded in concrete members shall meet the requirements of 6.3 and 6.4.

6.2.1 *Concrete Test Members:*

6.2.1.1 *Casting and Curing of Concrete Test Members*—Concrete used in testing shall meet the requirements of Sections 6.2.1.2 through 6.2.1.4 (*3*) (*b*) unless otherwise specified.

6.2.1.2 Cast test members either horizontally or vertically. If the member is cast vertically, the maximum height of a concrete lift shall be 5 ft [1.5 m]. In general, the thickness of the test member depends on the testing requirements. The test member shall be at least 1.5 h_{ef} thick, unless the specific test application requires a specific thickness.

6.2.1.3 *Surface Finish*—The surface of the test member shall be a formed or steel-troweled finish unless otherwise specified.

6.2.1.4 *Concrete for Test Members*—Concrete for test members shall meet the requirements of 6.2.1.4 (*1*) through 6.2.1.4 (*3*) (*b*).

(1) Aggregates—For normalweight concrete, use aggregates conforming to Specification C33/C33M, with a maximum size of 1 in. [25 mm] or Specification C330/C330M for lightweight concrete.

(2) Cement—Use only portland cement conforming to Specification C150/C150M for normalweight concrete or lightweight concrete, unless otherwise specified. If any other cementitious materials (for example, slag, fly ash, silica fume, or limestone powder) or chemical admixtures (for example, air-entraining agents, water reducers, hydrating water

AVA Documents
Document Sharing Hub

Full document details: ASTM E488/E488M-15

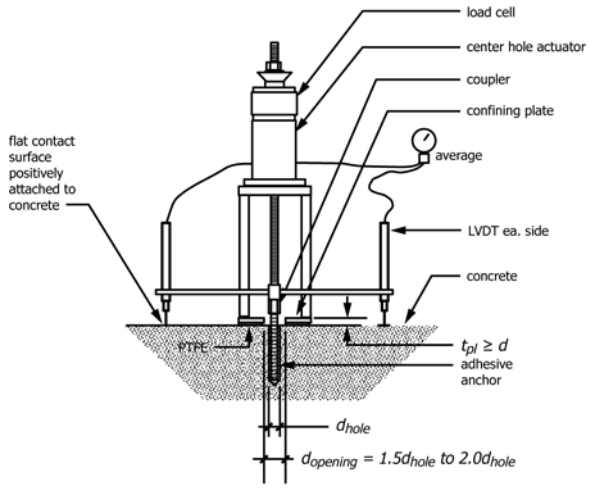

FIG. 3 Example of Confined Tension Test Setup – Adhesive Anchor Shown

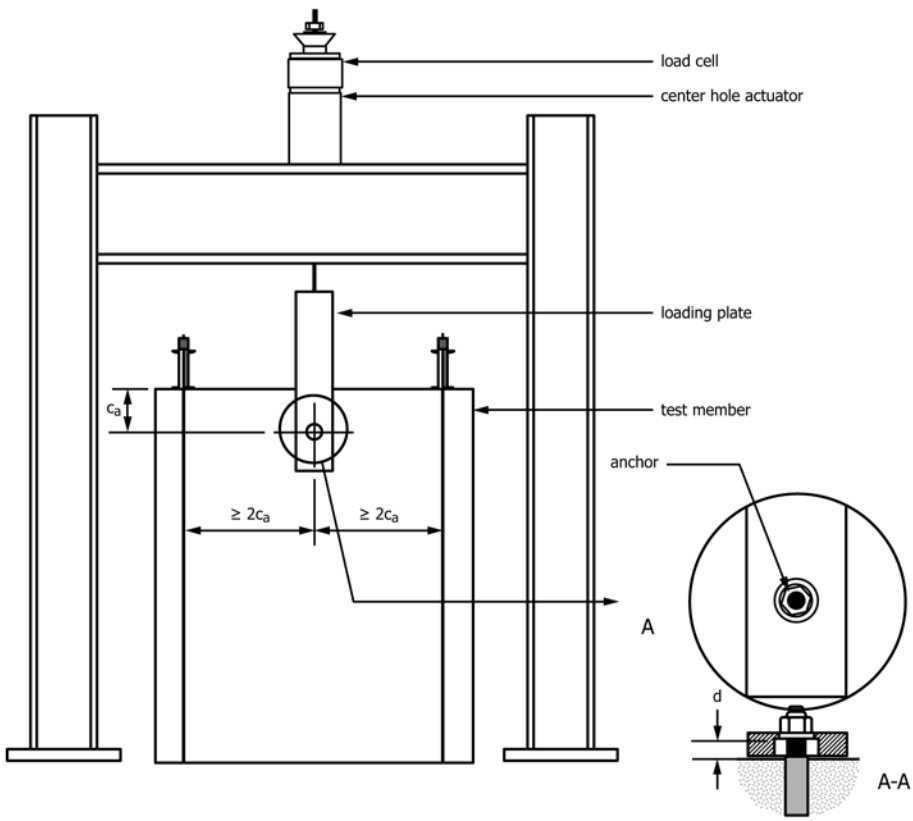

FIG. 4 Example of a Shear Test Setup

reducers, shrinkage-compensating admixtures, corrosion inhibitors, set retarders, and set accelerators) are used in the concrete test members, report them.

(3) Concrete Strength—Compressive strength specimens shall be prepared and tested in accordance with Practice C31/C31M and Test Method C39/C39M.

(a) Cure concrete cylinders in accordance with Practice C31/C31M or Test Method C39/C39M under the same environmental conditions as the test members. Remove molds from the cylinders at the same time that the forms are removed from the test members. Unless otherwise specified, at the time of anchor testing, the concrete shall be at least 21 days old. Establish the compressive strength of the concrete test member at the time of anchor testing by interpolation between the strengths of control samples at the start and at the end of testing, or at closer intervals as specified. Alternately, test enough control samples to plot a strength-versus-age graph, and use interpolation to estimate the concrete strength at the day of test.

(b) When evaluating the test results, if there is a question whether the strength of the concrete cylinders represents the concrete strength of the test member, verify the compressive

AVA Documents
Document Sharing Hub

Full document details: ASTM E488/E488M-15

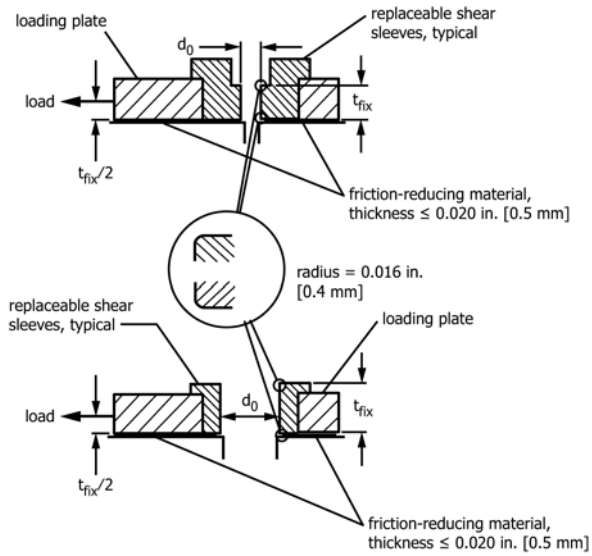

FIG. 5 Example of Shear Plate with Sleeves

TABLE 2 Shear Loading Plate Bearing Area as a Function of Anchor Diameter

Anchor Diameter, d_o in. [mm]	Shear Loading Plate Contact Area,[A,B] in.^{2} [cm^2]	
	minimum	maximum
<⅜ [<10]	8 [50]	12 [80]
⅜ ≤ d_o < ⅝ [16]	12 [80]	18 [115]
⅝ ≤ d_o < ⅞ [22]	18 [115]	25 [160]
⅞ ≤ d_o < 2 [50]	25 [160]	40 [260]
d_o≤ 2 [50]	40 [260]	60 [385]

[A] Shear loading plate contact area with PTFE or other friction-limiting material.
[B] Calculated uniform bearing stress on contact area due to self-weight of loading plate and associated loading apparatus shall not exceed 5 psi [0.03 MPa].

strength of at least three cores with diameters from 3 to 6 in. [75 to 150 mm], taken from the test member outside of the zones where the concrete has been damaged by the anchor test. Prepare the core samples, test them in the dry condition, and evaluate the results in accordance with the provisions of Test Method C42/C42M.

6.3 *Uncracked Concrete Test Members*—Use test members that are unreinforced, except as permitted by 6.3.1.

6.3.1 The test member shall be permitted to contain reinforcement to allow handling, the distribution of loads transmitted by the test equipment, or both. Place such reinforcement so that the capacity of the tested anchor is not affected. This requirement shall be considered to be met if the reinforcement is located outside a cone of concrete whose vertex is at the anchor, whose base is perpendicular to the direction of load, and whose internal vertex angle is 120 degrees.

6.4 *Cracked Concrete Test Members*—Test members shall be permitted to contain reinforcement to allow handling, the distribution of loads transmitted by test equipment, or both. Place the reinforcement so that the capacity of the tested anchor is not affected. See Fig. 7 for a representative concrete test member for cracked concrete.

6.4.1 The crack width shall be approximately uniform throughout the member thickness. The thickness of the test member shall be not less than the greater of 1.5 h_{ef} and 4 in. [100 mm]. To control the location of cracks and to help ensure that the anchors are installed to the full depth in the crack, crack inducers shall be permitted to be installed in the member, provided that they are not situated so as to influence the test results. For test members that use internal reinforcement to control the crack width, place the reinforcement so that it does not influence the performance of the anchors. Use a cross-sectional reinforcement ratio of about 1 %. Reinforcement shall be permitted in the failure cone of concrete. The center-to-center distance between the reinforcement and the anchor shall be greater than 0.4 h_{ef}, and the center-to-center distance between adjacent top and bottom crack-control reinforcement shall not be less than 10 in. [250 mm].

7. General Testing Procedures

7.1 *Anchor Installation*—Install the anchors according to the manufacturer's instructions. Report the installation details according to 15.1.7.

7.2 *Anchor Placement*—Install anchors in a formed face of the concrete or in concrete with a steel-troweled finish.

7.3 *Drill Bit Requirements*—Drill holes with a hammer (rotary-percussive) drill using carbide-tipped, hammer-drill bits conforming to Table 3 or Table 4, unless otherwise specified. Table 3 is based on the requirements of ANSI B212.15. For core bits or other bits not covered by Table 3 or Table 4, use a tolerance range analogous to that of Table 3 or Table 4 unless otherwise specified.

7.4 *Number of Anchor Test Specimens*—The minimum number of replicate anchor test specimens shall be specified as part of the testing program.

7.5 *Cracked Concrete Testing*—Use the procedure specified in 7.5.1 – 7.5.3 for testing anchors in cracked concrete.

7.5.1 Perform tests in concrete specimens meeting the requirements of 6.4, with the crack width w as specified for the given test. Initiate the crack and install the anchor in a closed crack according to 7.1 so that the axis of the anchor is

AVA Documents Document Sharing Hub

Full document details: ASTM E488/E488M-15