This international standard was developed in accordance with internationally recognized principles on standardization established in the Decision on Principles for the Development of International Standards, Guides and Recommendations issued by the World Trade Organization Technical Barriers to Trade (TBT) Committee.

Designation: E647 – 24

Standard Test Method for Measurement of Fatigue Crack Growth Rates[1]

This standard is issued under the fixed designation E647; the number immediately following the designation indicates the year of original adoption or, in the case of revision, the year of last revision. A number in parentheses indicates the year of last reapproval. A superscript epsilon (ε) indicates an editorial change since the last revision or reapproval.

1. Scope

1.1 This test method[2] covers the determination of fatigue crack growth rates from near-threshold (see region I in Fig. 1) to K_{max} controlled instability (see region III in Fig. 1.) Results are expressed in terms of the crack-tip stress-intensity factor range (ΔK), defined by the theory of linear elasticity.

1.2 Several different test procedures are provided, the optimum test procedure being primarily dependent on the magnitude of the fatigue crack growth rate to be measured.

1.3 Materials that can be tested by this test method are not limited by thickness or by strength so long as specimens are of sufficient thickness to preclude buckling and of sufficient planar size to remain predominantly elastic during testing.

1.4 A range of specimen sizes with proportional planar dimensions is provided, but size is variable to be adjusted for yield strength and applied force. Specimen thickness may be varied independent of planar size.

1.5 The details of the various specimens and test configurations are shown in Annex A1 – Annex A3. Specimen configurations other than those contained in this method may be used provided that well-established stress-intensity factor calibrations are available and that specimens are of sufficient planar size to remain predominantly elastic during testing.

1.6 Residual stress as well as a variety of shielding effects such as crack closure may significantly influence the interpretation of fatigue crack growth rate data, particularly at low stress-intensity factors and low force ratios (**1, 2**).[3] None of these variables are incorporated into the classical computation of applied ΔK.

1.7 Values stated in SI units are to be regarded as the standard. Values given in parentheses are for information only.

1.8 This test method is divided into two main parts. The first part gives general information concerning the recommendations and requirements for fatigue crack growth rate testing. The second part is composed of annexes that describe the special requirements for various specimen configurations, special requirements for testing in aqueous environments, and procedures for non-visual crack size determination. In addition, there are appendices that cover techniques for calculating da/dN, determining fatigue crack opening force, and guidelines for measuring the growth of small fatigue cracks. General information and requirements common to all specimen types are listed as follows:

	Section
Referenced Documents	2
Terminology	3
Summary of Use	4
Significance and Use	5
Apparatus	6
Specimen Configuration, Size, and Preparation	7
Procedure	8
Calculations and Interpretation of Results	9
Report	10
Precision and Bias	11
Special Requirements for Testing in Aqueous Environments	Annex A4
Guidelines for Use of Compliance to Determine Crack Size	Annex A5
Guidelines for Electric Potential Difference Determination of Crack Size	Annex A6
Recommended Data Reduction Techniques	Appendix X1
Recommended Practice for Determination of Fatigue Crack Opening Force from Compliance	Appendix X2
Guidelines for Measuring the Growth Rates of Small Fatigue Cracks	Appendix X3
Recommended Practice for Determination of ACR-Based Stress-Intensity Factor Range	Appendix X4

1.9 Special requirements for the various specimen configurations appear in the following order:

The Compact Specimen	Annex A1
The Middle Tension Specimen	Annex A2
The Eccentrically-Loaded Single Edge Crack Tension Specimen	Annex A3

1.10 *This standard does not purport to address all of the safety concerns, if any, associated with its use. It is the responsibility of the user of this standard to establish appropriate safety, health, and environmental practices and determine the applicability of regulatory limitations prior to use.*

1.11 *This international standard was developed in accordance with internationally recognized principles on standardization established in the Decision on Principles for the*

[1] This test method is under the jurisdiction of ASTM Committee E08 on Fatigue and Fracture and is the direct responsibility of Subcommittee E08.06 on Crack Growth Behavior.

Current edition approved May 1, 2024. Published June 2024. Originally approved in 1978. Last previous approved in 2023 as E647 – 23b. DOI: 10.1520/E0647-24.

[2] For additional information on this test method see RR: E24 – 1001. Available from ASTM Headquarters, 100 Barr Harbor Drive, West Conshohocken, PA 19428.

[3] The boldface numbers in parentheses refer to the list of references at the end of this standard.

Copyright © ASTM International, 100 Barr Harbor Drive, PO Box C700, West Conshohocken, PA 19428-2959. United States

Documents
Document Sharing Hub
Full document details: ASTM E647-24

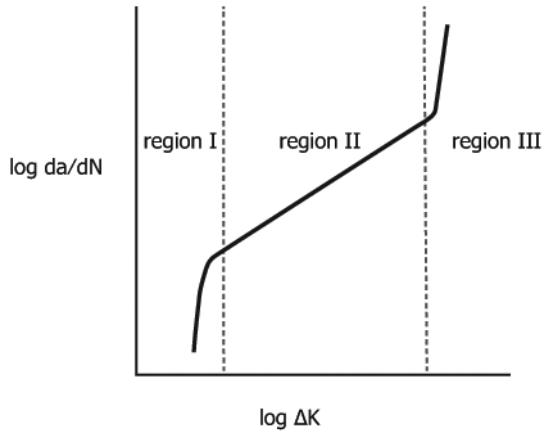

FIG. 1 Defined Regions of a Typical Fatigue Crack Growth Rate Curve

Development of International Standards, Guides and Recommendations issued by the World Trade Organization Technical Barriers to Trade (TBT) Committee.

2. Referenced Documents

2.1 *ASTM Standards:*[4]

E4 Practices for Force Calibration and Verification of Testing Machines

E6 Terminology Relating to Methods of Mechanical Testing

E8/E8M Test Methods for Tension Testing of Metallic Materials

E399 Test Method for Linear-Elastic Plane-Strain Fracture Toughness of Metallic Materials

E467 Practice for Verification of Constant Amplitude Dynamic Forces in an Axial Fatigue Testing System

E561 Test Method for K_R Curve Determination

E1012 Practice for Verification of Testing Frame and Specimen Alignment Under Tensile and Compressive Axial Force Application

E1820 Test Method for Measurement of Fracture Toughness

E1823 Terminology Relating to Fatigue and Fracture Testing

3. Terminology

3.1 The terms used in this test method are given in Terminology E6, and Terminology E1823. Wherever these terms are not in agreement with one another, use the definitions given in Terminology E1823 which are applicable to this test method.

3.2 *Definitions:*

3.2.1 *crack extension, Δa* [L]—an increase in crack size.

3.2.2 *crack size, a*[L], *n*—a linear measure of a principal planar dimension of a crack. This measure is commonly used in the calculation of quantities descriptive of the stress and displacement fields and is often also termed crack length or depth.

3.2.2.1 *Discussion*—In fatigue testing, crack length is the physical crack size. See *physical crack size* in Terminology E1823.

3.2.3 *cycle—in fatigue,* under constant amplitude loading, the force variation from the minimum to the maximum and then to the minimum force.

3.2.3.1 *Discussion*—In spectrum loading, the definition of cycle varies with the counting method used.

3.2.3.2 *Discussion*—In this test method, the symbol *N* is used to represent the number of cycles.

3.2.4 *fatigue crack growth rate, da/dN,* [*L/cycle*]—the rate of crack extension under fatigue loading, expressed in terms of crack extension per cycle.

3.2.5 *fatigue cycle*—See *cycle*.

3.2.6 *force cycle*—See *cycle*.

3.2.7 *force range, ΔP* [F]—*in fatigue*, the algebraic difference between the maximum and minimum forces in a cycle expressed as:

$$\Delta P = P_{max} - P_{min} \quad (1)$$

3.2.8 *force ratio (also called stress ratio), R—in fatigue*, the algebraic ratio of the minimum to maximum force (stress) in a cycle, that is, $R = P_{min}/P_{max}$.

3.2.9 *K-decreasing test*—a test in which the value of *C* is nominally negative. In this test method *K*-decreasing tests are conducted by shedding force, either continuously or by a series of decremental steps, as the crack grows.

3.2.10 *K-increasing test*—a test in which the value of *C* is nominally positive. For the standard specimens in this method the constant-force-amplitude test will result in a *K*-increasing test where the *C* value increases but is always positive.

3.2.11 *maximum force,* P_{max} [F]—*in fatigue*, the highest algebraic value of applied force in a cycle. Tensile forces are considered positive and compressive forces negative.

3.2.12 *maximum stress-intensity factor,* K_{max} [$FL^{-3/2}$]—*in fatigue*, the maximum value of the stress-intensity factor in a cycle. This value corresponds to P_{max}.

3.2.13 *minimum force,* P_{min} [F]—*in fatigue*, the lowest algebraic value of applied force in a cycle. Tensile forces are considered positive and compressive forces negative.

3.2.14 *minimum stress-intensity factor,* K_{min} [$FL^{-3/2}$]—*in fatigue*, the minimum value of the stress-intensity factor in a cycle. This value corresponds to P_{min} when R > 0 and is taken to be zero when R ≤ 0.

3.2.15 *notch height, h* [L]—the distance between the parallel faces of the machined notch prior to specimen deformation.

3.2.16 *stress cycle*—See **cycle** in Terminology E1823.

3.2.17 *stress-intensity factor, K,* K_1, K_2, K_3 [$FL^{-3/2}$]—See Terminology E1823.

3.2.17.1 *Discussion*—In this test method, mode 1 is assumed and the subscript 1 is everywhere implied.

3.2.18 *stress-intensity factor range, ΔK* [$FL^{-3/2}$]—*in fatigue*, the variation in the stress-intensity factor in a cycle, that is

$$\Delta K = K_{max} - K_{min} \quad (2)$$

[4] For referenced ASTM standards, visit the ASTM website, www.astm.org, or contact ASTM Customer Service at service@astm.org. For *Annual Book of ASTM Standards* volume information, refer to the standard's Document Summary page on the ASTM website.

AVA Documents
Document Sharing Hub

Full document details: ASTM E647-24

3.2.18.1 *Discussion*—The loading variables R, ΔK, and K_{max} are related such that specifying any two uniquely defines the third in accordance with the following relationships:

$$\Delta K = (1 - R)K_{max} \text{ for } R \geq 0, \text{ and} \quad (3)$$

$$\Delta K = K_{max} \text{ for } R < 0.$$

3.2.18.2 *Discussion*—These preceding stress-intensity factor definitions do not include local crack-tip effects; for example, crack closure, residual stress, and blunting.

3.2.18.3 *Discussion*—While the operational definition of ΔK states that ΔK does not change for a constant value of K_{max} when $R < 0$, increases in fatigue crack growth rates can be observed when R becomes more negative. Excluding the compressive forces in the calculation of ΔK does not influence the material's response (da/dN) which is independent of the operational definition of ΔK. For predicting crack-growth lives generated under various R conditions, the life prediction methodology must be consistent with the data reporting methodology.

3.2.18.4 *Discussion*—An alternative definition for the stress-intensity factor range, which utilizes the full range of R, is $\Delta K_{fr} = K_{max} - K_{min}$. (In this case, K_{min} is the minimum value of stress-intensity factor in a cycle, regardless of R.) If using this definition, in addition to the requirements of 10.1.13, the value of R for the test should also be tabulated. If comparing data developed under $R < 0$ conditions with data developed under $R \geq 0$ conditions, it may be beneficial to plot the da/dN data versus K_{max}.

3.3 *Definitions of Terms Specific to This Standard:*

3.3.1 *fatigue crack growth threshold, ΔK_{th}* [FL$^{-3/2}$]—that asymptotic value of ΔK at which da/dN approaches zero.

3.3.1.1 *Discussion*—For most materials an *operational*, though arbitrary, definition of ΔK_{th} is given as that ΔK which corresponds to a fatigue crack growth rate of 10^{-10} m/cycle.

3.3.1.2 *Discussion*—The procedure for determining this *operational ΔK_{th}* is given in 9.4.

3.3.1.3 *Discussion*—The intent of this definition is not to define a true threshold, but rather to provide a practical means of characterizing a material's fatigue crack growth resistance in the near-threshold regime. Caution is required in extending this concept to design (see 5.1.5).

3.3.2 *fatigue crack growth rate, da/dN or Δa/ΔN, [L]—in fatigue*, the rate of crack extension caused by fatigue loading and expressed in terms of average crack extension per cycle.

3.3.3 *normalized K-gradient, C = (1/K).* dK/da [L^{-1}]—the fractional rate of change of K with increasing crack size.

3.3.3.1 *Discussion*—When C is held constant the percentage change in K is constant for equal increments of crack size. The following identity is true for the normalized K-gradient in a constant force ratio test:

$$\frac{1}{K}\cdot\frac{dK}{da} = \frac{1}{K_{max}}\cdot\frac{dK_{max}}{da} = \frac{1}{K_{min}}\cdot\frac{dK_{min}}{da} = \frac{1}{\Delta K}\cdot\frac{d\Delta K}{da} \quad (4)$$

4. Summary of Test Method

4.1 This test method involves cyclic loading of notched specimens which have been acceptably precracked in fatigue. Crack size is measured, either visually or by an equivalent method, as a function of elapsed fatigue cycles and these data are subjected to numerical analysis to establish the rate of crack growth. Crack growth rates are expressed as a function of the stress-intensity factor range, ΔK, which is calculated from expressions based on linear elastic stress analysis.

5. Significance and Use

5.1 Fatigue crack growth rate expressed as a function of crack-tip stress-intensity factor range, da/dN versus ΔK, characterizes a material's resistance to stable crack extension under cyclic loading. Background information on the ration-ale for employing linear elastic fracture mechanics to analyze fatigue crack growth rate data is given in Refs (**3**) and (**4**).

5.1.1 In innocuous (inert) environments fatigue crack growth rates are primarily a function of ΔK and force ratio, R, or K_{max} and R (Note 1). Temperature and aggressive environments can significantly affect da/dN versus ΔK, and in many cases accentuate R-effects and introduce effects of other loading variables such as cycle frequency and waveform. Attention needs to be given to the proper selection and control of these variables in research studies and in the generation of design data.

NOTE 1—ΔK, K_{max}, and R are not independent of each other. Specification of any two of these variables is sufficient to define the loading condition. It is customary to specify one of the stress-intensity parameters (ΔK or K_{max}) along with the force ratio, R.

5.1.2 Expressing da/dN as a function of ΔK provides results that are independent of planar geometry, thus enabling exchange and comparison of data obtained from a variety of specimen configurations and loading conditions. Moreover, this feature enables da/dN versus ΔK data to be utilized in the design and evaluation of engineering structures. The concept of similitude is assumed, which implies that cracks of differing lengths subjected to the same nominal ΔK will advance by equal increments of crack extension per cycle.

5.1.3 Fatigue crack growth rate data are not always geometry-independent in the strict sense since thickness effects sometimes occur. However, data on the influence of thickness on fatigue crack growth rate are mixed. Fatigue crack growth rates over a wide range of ΔK have been reported to either increase, decrease, or remain unaffected as specimen thickness is increased. Thickness effects can also interact with other variables such as environment and heat treatment. For example, materials may exhibit thickness effects over the terminal range of da/dN versus ΔK, which are associated with either nominal yielding (Note 2) or as K_{max} approaches the material fracture toughness. The potential influence of specimen thickness should be considered when generating data for research or design.

NOTE 2—This condition should be avoided in tests that conform to the specimen size requirements listed in the appropriate specimen annex.

5.1.4 Residual stresses can influence fatigue crack growth rates, the measurement of such growth rates and the predictability of fatigue crack growth performance. The effect can be significant when test specimens are removed from materials that embody residual stress fields; for example weldments or complex shape forged, extruded, cast or machined thick sections, where full stress relief is not possible or where parts

AVA Documents
Document Sharing Hub

Full document details: ASTM E647-24

having complex shape forged, extruded, cast or machined thick sections where full stress relief is not possible or worked parts having intentionally-induced residual stresses. Specimens taken from such products that contain residual stresses will likewise themselves contain residual stress. While extraction of the specimen and introduction of the crack starting slot in itself partially relieves and redistributes the pattern of residual stress, the remaining magnitude can still cause significant error in the ensuing test result. Residual stress is superimposed on the applied cyclic stress and results in actual crack-tip maximum and minimum stress-intensities that are different from those based solely on externally applied cyclic forces or displacements. For example, crack-clamping resulting from far-field 3D residual stresses may lead to partly compressive stress cycles, and exacerbate the crack closure effect, even when the specimen nominal applied stress range is wholly tensile. Machining distortion during specimen preparation, specimen location and configuration dependence, irregular crack growth during fatigue precracking (for example, unexpected slow or fast crack growth rate, excessive crack-front curvature or crack path deviation), and dramatic relaxation in crack closing forces (associated with specimen stress relief as the crack extends) will often indicate influential residual stress impact on the measured da/dN versus ΔK result. (**5**, **6**) Noticeable crack-mouth-opening displacement at zero applied force is indicative of residual stresses that can affect the subsequent fatigue crack growth property measurement.

5.1.5 The growth rate of small fatigue cracks can differ noticeably from that of long cracks at given ΔK values. Use of long crack data to analyze small crack growth often results in non-conservative life estimates. The small crack effect may be accentuated by environmental factors. Cracks are defined as being small when 1) their length is small compared to relevant microstructural dimension (a continuum mechanics limitation), 2) their length is small compared to the scale of local plasticity (a linear elastic fracture mechanics limitation), and 3) they are merely physically small (<1 mm). Near-threshold data established according to this method should be considered as representing the materials' steady-state fatigue crack growth rate response emanating from a long crack, one that is of sufficient length such that transition from the initiation to propagation stage of fatigue is complete. Steady-state near-threshold data, when applied to service loading histories, may result in non-conservative lifetime estimates, particularly for small cracks (**7-9**).

5.1.6 Crack closure can have a dominant influence on fatigue crack growth rate behavior, particularly in the near-threshold regime at low stress ratios. This implies that the conditions in the wake of the crack and prior loading history can have a bearing on the current propagation rates. The understanding of the role of the closure process is essential to such phenomena as the behavior of small cracks and the transient crack growth rate behavior during variable amplitude loading. Closure provides a mechanism whereby the cyclic stress intensity near the crack tip, ΔK_{eff}, differs from the nominally applied values, ΔK. This concept is of importance to the fracture mechanics interpretation of fatigue crack growth rate data since it implies a non-unique growth rate dependence in terms of ΔK, and R (**1**).[5]

NOTE 3—The characterization of small crack behavior may be more closely approximated in the near-threshold regime by testing at a high stress ratio where the anomalies due to crack closure are minimized.

5.1.7 Along with crack closure, other forms of crack tip shielding such as branching, wedging, bridging and sliding (among other extrinsic effects) can also reduce the crack tip driving force in comparison to the applied ΔK, with some of these sensitive to crack orientation relative to the material grain structure (E1823, Annex A2). The shielding concept is of importance to the fracture mechanics interpretation of fatigue crack growth rate data since it also implies a non-unique growth-rate dependence in terms of applied ΔK and R and may invalidate typical assumptions about LEFM similitude, because the shielding dissipates energy not accounted for in the standard stress-intensity factor calculation. Material grain structure can have a substantial influence on rate behavior, especially for materials with significant deformation during rolling or other forming processes such as those that occur in the manufacture of aluminum alloy sheet, plate, forged, and extruded product forms. For some materials, the common L-T and T-L orientations can lead to interactions between crack-tip stress-strain fields and the surrounding grain structure, leading to such effects as delamination toughening. Applications of some aluminum thick plate and forging products to unitized structure introduce possibilities of growth in less common orientations such as L-S and T-S, leading to out-of-plane crack branching and unexpected crack turning to the weakest microstructural plane during through-thickness crack growth. Such complex shielding mechanisms may prevent successful transfer of data from coupons to structural application, where grain structure and crack tip stress state may not be similar to those of the test coupon (**2**).

5.1.8 Care should be taken to: identify and understand unexpected shielding mechanisms during characterization; assess similitude and transferability of the FCGR data for other uses such as material ranking or structural analysis; and prevent unconservative data and applications.

5.2 This test method can serve the following purposes:

5.2.1 To establish the influence of fatigue crack growth on the life of components subjected to cyclic loading, provided data are generated under representative conditions and combined with appropriate fracture toughness data (for example, see Test Method E399), defect characterization data, and stress analysis information (**10**, **11**).

NOTE 4—Fatigue crack growth can be significantly influenced by load history. During variable amplitude loading, crack growth rates can be either enhanced or retarded (relative to steady-state, constant-amplitude growth rates at a given ΔK) depending on the specific loading sequence. This complicating factor needs to be considered in using constant-amplitude growth rate data to analyze variable amplitude fatigue problems (**12**).

5.2.2 To establish material selection criteria and inspection requirements for damage tolerant applications.

[5] Subcommittee E08.06 has initiated a study group activity on crack closure measurement and analysis. Reference (**1**) provides background information on this subject.

Document Sharing Hub

Full document details: ASTM E647-24

5.2.3 To establish, in quantitative terms, the individual and combined effects of metallurgical, fabrication, environmental, and loading variables on fatigue crack growth.

6. Apparatus

6.1 *Grips and Fixtures*—Grips and fixturing required for the specimens outlined in this method are described in the appropriate specimen annex.

6.2 *Alignment of Grips*—It is important that attention be given to achieving good alignment in the force train through careful machining of all gripping fixtures. Misalignment can cause non-symmetric cracking, particularly for critical applications such as near-threshold testing, which in turn may lead to invalid data (see Sec. 8.3.4, 8.8.3). If non-symmetric cracking occurs, the use of a strain-gaged specimen to identify and minimize misalignment might prove useful. One method to identify bending under tensile loading conditions is described in Practice E1012. Another method which specifically addresses measurement of bending in pin-loaded specimen configurations is described in Ref (**13**). For tension-compression loading the length of the force train (including the hydraulic actuator) should be minimized, and rigid, non-rotating joints should be employed to reduce lateral motion in the force train.

NOTE 5—If compliance methods are used employing displacement gages similar to those described in Test Methods E399, E1820, or E561, knife edges can be integrally machined or rigidly affixed to the test sample (either fastened, bonded, or welded) and must be geometrically compatible with the displacement device such that line contact is maintained throughout the test.

7. Specimen Configuration, Size, and Preparation

7.1 *Standard Specimens*—Details of the test specimens outlined in this method are furnished as separate annexes (Annex A1 – Annex A3) to this method. Notch and precracking details for the specimens are given in Fig. 2.

7.1.1 For specimens removed from material for which complete stress relief is impractical (see 5.1.4), the effect of residual stresses on the crack propagation behavior can be minimized through the careful selection of specimen shape and size. By selecting a small ratio of specimen dimensions, *B/W* the effect of a through-the-thickness distribution of residual stresses acting perpendicular to the direction of crack growth can be reduced. This choice of specimen shape minimizes crack curvature or other crack front irregularities which confuse the calculation of both d*a*/d*N* and Δ*K*. In addition, residual stresses acting parallel to the direction of crack growth can often produce clamping or opening moments about the crack-tip, which can also confound test results. This is particularly true for deep edge-notched specimens such as the C(T), which can display significant crack-mouth movement during machining of the crack starter notch. In these instances it is useful to augment both specimen preparation and subsequent testing with displacement measurements as has been recommended for fracture toughness determination in non-stress-relieved products. (**14**) In most, but not all, of these cases, the impact of residual-stress-induced clamping on crack growth property measurement can be minimized by selecting a symmetrical specimen configuration, that is, the M(T) specimen. Alternately, there can be situations where the specimen is too constrained to result in measurable post-machining movement after sharp-notch introduction. If this is so, and the crack is small enough to be wholly embedded in a field of tension or compression, then the cyclic stress ratio operating at the crack-tip will be different from that calculated from the applied cyclic loads. At this time the only recourse is to test an alternate specimen configuration or sample location to check for uniqueness of the d*a*/d*N*-Δ*K* relationship as a means to determine if residual stress is significantly biasing the measured result.

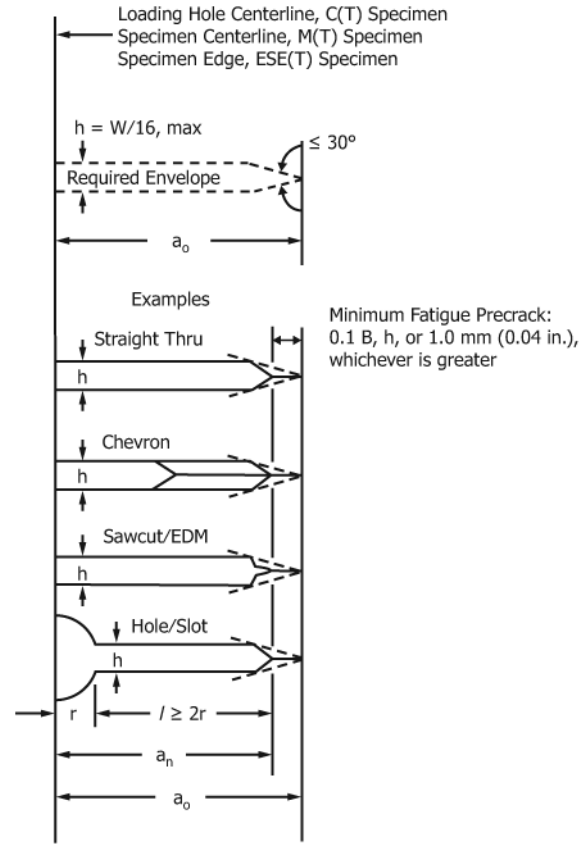

FIG. 2 Notch Details and Minimum Fatigue Precracking Requirements

7.2 *Specimen Size*—In order for results to be valid according to this test method it is required that the specimen be predominantly elastic at all values of applied force. The minimum in-plane specimen sizes to meet this requirement are based primarily on empirical results and are specific to the specimen configuration as furnished in the appropriate specimen annex (**11**).

NOTE 6—The size requirements described in the various specimen annexes are appropriate for low-strain hardening materials ($\sigma_{ULT}/\sigma_{YS} \leq 1.3$) (**15**) and for high-strain hardening materials ($\sigma_{ULT}/\sigma_{YS} \geq 1.3$) under certain conditions of force ratio and temperature (**16, 17**) (where σ_{ULT} is the ultimate tensile strength of the material). However, under other conditions of force ratio and temperature, the requirements listed in the annexes appear to be overly restrictive-that is, they require specimen sizes which are larger than necessary (**18, 19**). Currently, the conditions giving rise to each of these two regimes of behavior are not clearly defined.

7.2.1 An alternative size requirement may be employed for high-strain hardening materials as follows. The uncracked ligament requirement listed for the specific specimen geometry

AVA Documents
Document Sharing Hub

Full document details: ASTM E647-24

may be relaxed by replacing σ_{YS} with a higher, effective yield strength which accounts for the material strain hardening capacity. For purposes of this test method, this *effective* yield strength, termed flow strength, is defined as follows:

$$\sigma_{FS} = (\sigma_{YS} + \sigma_{ULT})/2 \quad (5)$$

However, it should be noted that the use of this alternative size requirement allows mean plastic deflections to occur in the specimen. These mean deflections under certain conditions, as noted previously, can accelerate growth rates by as much as a factor of two. Although these data will generally add conservatism to design or structural reliability computations, they can also confound the effects of primary variables such as specimen thickness (if *B/W* is maintained constant), force ratio, and possibly environmental effects. Thus, when the alternative size requirement is utilized, it is important to clearly distinguish between data that meet the yield strength or flow strength criteria. In this way, data will be generated that can be used to formulate a specimen size requirement of general utility.

7.3 *Notch Preparation*—The machined notch for standard specimens may be made by electrical-discharge machining (EDM), milling, broaching, or sawcutting. The following notch preparation procedures are suggested to facilitate fatigue precracking in various materials:

7.3.1 *Electric Discharge Machining*—$\rho < 0.25$ mm (0.010 in.) (ρ = notch root radius), high-strength steels ($\sigma_{YS} \geq 1175$ MPa/170 ksi), titanium and aluminum alloys.

7.3.2 *Mill or Broach*—$\rho \leq 0.075$ mm (0.003 in.), low or medium-strength steels ($\sigma_{YS} \leq 1175$ MPa/170 ksi), aluminum alloys.

7.3.3 *Grind*—$\rho \leq 0.25$ mm (0.010 in.), low or medium-strength steels.

7.3.4 *Mill or Broach*—$\rho \leq 0.25$ mm (0.010 in.), aluminum alloys.

7.3.5 *Sawcut*—Recommended only for aluminum alloys.

7.3.6 Examples of various machined-notch geometries and associated precracking requirements are given in Fig. 2 (see 8.3).

7.3.7 When residual stresses are suspected of being present (see 5.1.4), local displacement measurements made before and after machining the crack starter notch are useful for detecting the potential magnitude of the effect. A simple mechanical displacement gage can be used to measure distance between two hardness indentations at the mouth of the notch (**5, 14**). Limited data obtained during preparation of aluminum alloy C(T) specimens with the specimen width, W, ranging from 50-100 mm (2-4 in.) has shown that fatigue crack growth rates can be impacted significantly when these mechanical displacement measurements change by more than 0.05 mm (0.002 in.).(**6**)

8. Procedure

8.1 *Number of Tests*—At crack growth rates greater than 10^{-8} m/cycle, the within-lot variability (neighboring specimens) of d*a*/d*N* at a given ΔK typically can cover about a factor of two (**20**). At rates below 10^{-8} m/cycle, the variability in d*a*/d*N* may increase to about a factor of five or more due to increased sensitivity of d*a*/d*N* to small variations in ΔK. This scatter may be increased further by variables such as microstructural differences, residual stresses, changes in crack tip geometry (crack branching) or near tip stresses as influenced for example by crack roughness or product wedging, force precision, environmental control, and data processing techniques. These variables can take on added significance in the low crack growth rate regime (d*a*/d*N* < 10^{-8} m/cycle). In view of the operational definition of the threshold stress intensity (see 3.3.1 and 9.4), at or near threshold it is more meaningful to express variability in terms of ΔK rather than d*a*/d*N*. It is good practice to conduct replicate tests; when this is impractical, multiple tests should be planned such that regions of overlapping d*a*/d*N* versus ΔK data are obtained, particularly under both *K*-increasing and *K*-decreasing conditions. Since confidence in inferences drawn from the data increases with number of tests, the desired number of tests will depend on the end use of the data.

8.2 *Specimen Measurements*—The specimen dimensions shall be within the tolerances given in the appropriate specimen annex.

8.3 *Fatigue Precracking*—The importance of precracking is to provide a sharpened fatigue crack of adequate size and straightness (also symmetry for the M(T) specimen) which ensures that *1*) the effect of the machined starter notch is removed from the specimen *K*-calibration, and *2*) the effects on subsequent crack growth rate data caused by changing crack front shape or precrack load history are eliminated.

8.3.1 Conduct fatigue precracking with the specimen fully heat treated to the condition in which it is to be tested. The precracking equipment shall be such that the force distribution is symmetrical with respect to the machined notch and K_{max} during precracking is controlled to within ±5 %. Any convenient loading frequency that enables the required force accuracy to be achieved can be used for precracking. The machined notch plus the precrack must lie within the envelope, shown in Fig. 2, that has as its apex the end of the fatigue precrack. In addition the fatigue precrack shall not be less than 0.10*B*, *h*, or 1.0 mm (0.040 in.), whichever is greater Fig. 2

8.3.2 The final K_{max} during precracking shall not exceed the initial K_{max} for which test data are to be obtained. If necessary, forces corresponding to higher K_{max} values may be used to initiate cracking at the machined notch. In this event, the force range shall be stepped-down to meet the above requirement. Furthermore, it is suggested that reduction in P_{max} for any of these steps be no greater than 20 % and that measurable crack extension occur before proceeding to the next step. To avert transient effects in the test data, apply the force range in each step over a crack size increment of at least $(3/\pi)\ (K'_{max}/\sigma_{YS})^2$, where K'_{max} is the terminal value of K_{max} from the previous forcestep. If P_{min}/P_{max} during precracking differs from that used during testing, see the precautions described in 8.5.1.

8.3.3 For the *K*-decreasing test procedure, prior loading history may influence near-threshold growth rates despite the precautions of 8.3.2. It is good practice to initiate fatigue cracks at the lowest stress intensity possible. Precracking growth rates less than 10^{-8} m/cycle are suggested. A compressive force, less than or equal to the precracking force, may

AVA Documents
Document Sharing Hub

Full document details: ASTM E647-24

facilitate fatigue precracking and may diminish the influence of the *K*-decreasing test procedure on subsequent fatigue crack growth rate behavior.

8.3.4 Measure the crack sizes on the front and back surfaces of the specimen to within 0.10 mm (0.004 in.) or 0.002*W*, whichever is greater. For specimens where W > 127 mm (5 in.), measure crack size to within 0.25 mm (0.01 in.). If crack sizes measured on front and back surfaces differ by more than 0.25*B*, the pre-cracking operation is not suitable and subsequent testing would be invalid under this test method. In addition for the M(T) specimen, measurements referenced from the specimen centerline to the two cracks (for each crack use the average of measurements on front and back surfaces) shall not differ by more than 0.025*W*. If the fatigue crack departs more than the allowable limit from the plane of symmetry (see 8.8.3) the specimen is not suitable for subsequent testing. If the above requirements cannot be satisfied, check for potential problems in alignment of the loading system and details of the machined notch, or material-related problems such as residual stresses.

8.4 *Test Equipment*—The equipment for fatigue testing shall be such that the force distribution is symmetrical to the specimen notch.

8.4.1 Verify the force cell in the test machine in accordance with Practices E4 and E467. Conduct testing such that both ΔP and P_{max} are controlled to within ±2 % of the targeted values throughout the test.

8.4.2 An accurate digital device is required for counting elapsed cycles. A timer is a desirable supplement to the counter and provides a check on the counter. Multiplication factors (for example, ×10 or ×100) should not be used on counting devices when obtaining data at growth rates above 10^{-5} m/cycle since they can introduce significant errors in the growth rate determination.

8.5 *Constant-Force-Amplitude Test Procedure for da/dN > 10^{-8} m/cycle*—This test procedure is well suited for fatigue crack growth rates above 10^{-8} m/cycle. However, it becomes increasingly difficult to use as growth rates decrease below 10^{-8} m/cycle because of precracking considerations (see 8.3.3). (A *K*-decreasing test procedure which is better suited for rates below 10^{-8} m/cycle is provided in 8.6.) When using the constant-force-amplitude procedure it is preferred that each specimen be tested at a constant force range (ΔP) and a fixed set of loading variables (stress ratio and frequency). However, this may not be feasible when it is necessary to generate a wide range of information with a limited number of specimens. When loading variables are changed during a test, potential problems arise from several types of transient phenomenon (**21**). The following test procedures should be followed to minimize or eliminate transient effects while using this *K*-increasing test procedure.

8.5.1 If force range is to be incrementally varied it should be done such that P_{max} is increased rather than decreased to preclude retardation of growth rates caused by overload effects; retardation being a more pronounced effect than accelerated crack growth associated with incremental increase in P_{max}. Transient growth rates are also known to result from changes in P_{min} or *R*. Sufficient crack extension should be allowed following changes in force to enable the growth rate to establish a steady-state value. The amount of crack growth that is required depends on the magnitude of force change and on the material. An incremental increase of 10 % or less will minimize these transient growth rates.

8.5.2 When environmental effects are present, changes in force level, test frequency, or waveform can result in transient growth rates. Sufficient crack extension should be allowed between changes in these loading variables to enable the growth rate to achieve a steady-state value.

8.5.3 Transient growth rates can also occur, in the absence of loading variable changes, due to long-duration test interruptions, for example, during work stoppages. In this case, data should be discarded if the growth rates following an interruption are less than those before the interruption.

8.6 *K-Decreasing Procedure for da/dN < 10^{-8} m/cycle*—This procedure is started by cycling at a ΔK and K_{max} level equal to or greater than the terminal precracking values. Subsequently, forces are decreased (shed) as the crack grows, and test data are recorded until the lowest ΔK or crack growth rate of interest is achieved. The test may then be continued at constant force limits to obtain comparison data under *K*-increasing conditions. The *K*-decreasing procedure is not recommended at fatigue crack growth rates above 10^{-8} m/cycle since prior loading history at such associated ΔK levels may influence the near-threshold fatigue crack growth rate behavior.

NOTE 7—ASTM Subcommittee E08.06 has initiated a task group (E08.06.06) that is investigating the procedures for the determination of fatigue crack growth rates at or near threshold. The outcome of this task group may influence the procedure outlined in this section. Recent research has indicated that the use of the force-reduction procedure, in some circumstances, may result in non-steady-state conditions, specimen-width effects (**22**), specimen-type effects (**23**), and non-conservative growth rates.

8.6.1 Force shedding during the *K*-decreasing test may be conducted as decreasing force steps at selected crack size intervals, as shown in Fig. 3. Alternatively, the force may be shed in a continuous manner by an automated technique (for example, by use of an analog computer or digital computer, or both) (**24**).

8.6.2 The rate of force shedding with increasing crack size shall be gradual enough to 1) preclude anomalous data resulting from reductions in the stress-intensity factor and concomitant transient growth rates, and 2) allow the establishment of about five d*a*/d*N*, ΔK data points of approximately equal spacing per decade of crack growth rate. The above requirements can be met by limiting the normalized *K*-gradient, $C = 1/K \cdot dK/da$, to a value algebraically equal to or greater than –0.08 mm^{-1} (–2 $in.^{-1}$). That is:

$$C = \left(\frac{1}{K}\right)\cdot\left(\frac{dK}{da}\right) > -0.08\ \mathrm{mm}^{-1}\ (-2\ \mathrm{in.}^{-1}) \tag{6}$$

When forces are incrementally shed, the requirements on *C* correspond to the nominal *K*-gradient depicted in Fig. 3.

NOTE 8—Acceptable values of *C* may depend on load ratio, test material, and environment. Values of *C* algebraically greater than that indicated above have been demonstrated as acceptable for use in decreasing *K* tests of several steel alloys and aluminum alloys tested in laboratory air over a wide range of force ratios (**15**, **24**).

AVA Documents
Document Sharing Hub

Full document details: ASTM E647-24

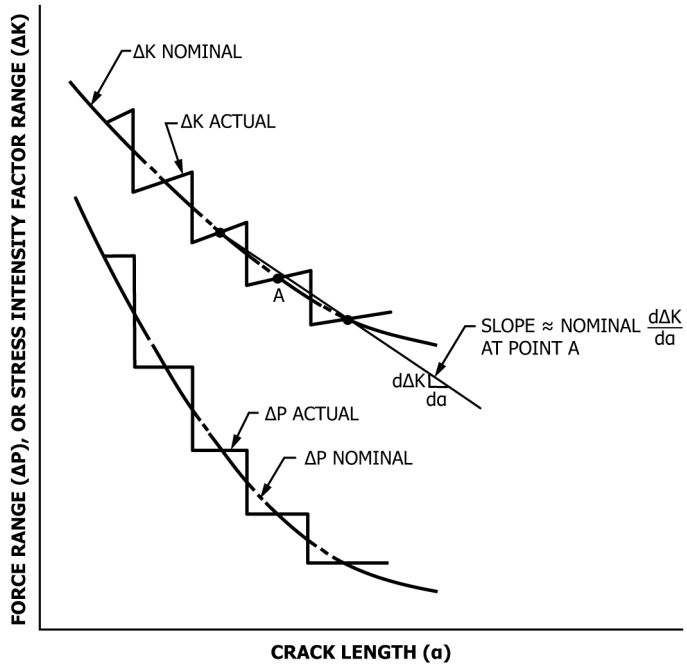

FIG. 3 Typical *K* Decreasing Test by Stepped Force Shedding

8.6.3 If the normalized *K*-gradient *C* is algebraically less than that prescribed in 8.6.2, the procedure shall consist of decreasing *K* to the lowest growth rate of interest followed by a *K*-increasing test at a constant ΔP (conducted in accordance with 8.5). Upon demonstrating that data obtained using *K*-increasing and *K*-decreasing procedures are equivalent for a given set of test conditions, the *K*-increasing testing may be eliminated from all replicate testing under these same test conditions.

NOTE 9—It is good practice to have *K*-decreasing followed by *K*-increasing data for the first test of any single material regardless of the *C* value used.

8.6.4 It is recommended that the force ratio, *R*, and *C* be maintained constant during *K*-decreasing testing (see 8.7.1 for exceptions to this recommendation).

8.6.5 The relationships between *K* and crack size and between force and crack size for a constant-*C* test are given as follows:

8.6.5.1 $\Delta K = \Delta K_o \exp[C(a - a_o)]$, where ΔK_o is the initial ΔK at the start of the test, and a_o is the corresponding crack size. Because of the identities given in 5.1.1 (Note 1) and in the Definitions 3.2.18, the above relationship is also true for K_{max} and K_{min}.

8.6.5.2 The force histories for the standard specimens of this test method are obtained by substituting the appropriate *K*-calibrations given in the respective specimen annex into the above expression.

8.6.6 When employing step shedding of force, as in Fig. 3, the reduction in P_{max} of adjacent force steps shall not exceed 10 % of the previous P_{max}. Upon adjustment of maximum force from P_{max1} to a lower value, P_{max2}, a minimum crack extension of 0.50 mm (0.02 in.) is recommended.

8.6.7 When employing continuous shedding of force, the requirement of 8.6.6 is waived. Continuous force shedding is defined as $(P_{max1} - P_{max2})/P_{max1} \leq 0.02$.

8.7 *Alternative K-control test procedures*—Ideally, it is desirable to generate d*a*/d*N*, ΔK data at *K*-gradients independent of the specimen geometry (**25**). Exercising control over this *K*-gradient allows much steeper gradients for small values of *a*/*W* without the undesirable feature of having too steep a *K*-gradient at the larger values of *a*/*W* associated with constant amplitude loading. Generating data at an appropriate *K*-gradient, using a constant and positive value of the *K*-gradient parameter, *C*, (see 8.6.2) provides numerous advantages: the test time is reduced; the d*a*/d*N*-ΔK data can be evenly distributed without using variable Δa increments; a wider range of data may be generated without incremental force increases; the *K*-gradient is independent of the specimen geometry.

8.7.1 Situations may arise where changing ΔK under conditions of constant K_{max} or constant K_{mean} may be more representative than under conditions of constant *R*. The application of the test data should be considered in choosing an appropriate mode of *K*-control. For example, a more conservative estimate of near-threshold behavior may be obtained by using this test method. This process effectively measures near-threshold data at a high stress ratio.

8.8 *Measurement of Crack Size*—Make fatigue crack size measurements as a function of elapsed cycles by means of a visual, or equivalent, technique capable of resolving crack extensions of 0.10 mm (0.004 in.), or 0.002*W*, whichever is greater. For visual measurements, polishing the test area of the specimen and using indirect lighting aid in the resolution of the crack-tip. It is suggested that, prior to testing, reference marks

AVA Documents
Document Sharing Hub

Full document details: ASTM E647-24

be applied to the test specimen at predetermined locations along the direction of cracking. Crack size can then be measured using a low power (20 to 50×) traveling microscope. Using the reference marks eliminates potential errors due to accidental movement of the traveling microscope. If precision photographic grids or polyester scales are attached to the specimen, crack size can be determined directly with any magnifying device that gives the required resolution. It is preferred that measurements be made without interrupting the test.

NOTE 10—Interruption of cyclic loading for the purpose of crack size measurement can be permitted providing strict care is taken to avoid introducing any significant extraneous damage (for example, creep deformation) or transient crack extension (for example, growth under static force). The interruption time should be minimized (less than 10 min.) and if a static force is maintained for the purpose of enhanced crack tip resolution, it should be carefully controlled. A static force equal to the fatigue mean force is probably acceptable (with high temperatures and corrosive environments, even mean levels should be questioned) but in no case should the static force exceed the maximum force applied during the fatigue test.

8.8.1 Make crack size measurements at intervals such that da/dN data are nearly evenly distributed with respect to ΔK. Recommended intervals are given in the appropriate specimen annex.

8.8.1.1 A minimum Δa of 0.25 mm (0.01 in.) is recommended. However, situations may arise where the Δa needs to be reduced below 0.25 mm (0.01 in.). Such is the case for threshold testing where it is required that at least five da/dN, ΔK data points in the near-threshold regime (see 9.4 3). In any case, the minimum Δa shall be ten times the crack size measurement precision.

NOTE 11—The crack size measurement precision is herein defined as the standard deviation on the mean value of crack size determined for a set of replicate measurements.

8.8.2 As a rule, crack size measurements should be made on both sides (front and back) of a specimen to ensure that the crack symmetry requirements of 8.8.3 are met. The average value of the measurements (two crack lengths for the C(T) specimen and four crack lengths for the M(T) specimen) should be used in all calculations of growth rate and K. If crack size measurements are not made on both sides at every crack size interval, the interval of both-side measurement must be reported. Measurement on only one side is permissible only if previous experience with a particular specimen configuration, test material, testing apparatus, and growth rate regime has shown that the crack symmetry requirements are met consistently.

8.8.3 If at any point in the test the crack deviates more than ±20° from the plane of symmetry over a distance of 0.1W or greater, the data are invalid according to this test method (**26**). A deviation between ±10 and ±20° must be reported. (See Fig. 4) In addition, data are invalid if (1) crack sizes measured on front and back surfaces differ by more than 0.25B. Additional validity requirements may be included in the specimen annexes.

NOTE 12—The requirements on out-of-plane cracking are commonly violated for large-grained or single-crystal materials. In these instances, results from anisotropic, mixed-mode stress analyses may be needed to compute K; (for example, see Ref. (**27**)).

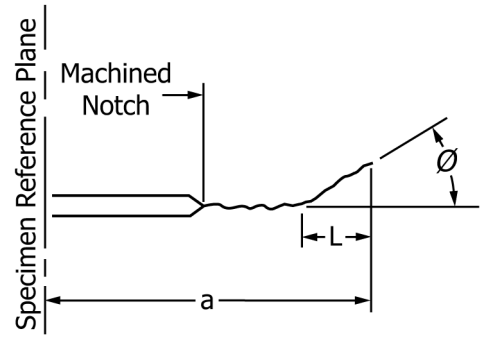

Valid if Ø ≤ 10°
Report if 10° < Ø ≤ 20°
Invalid if Ø > 20° for L ≥ 0.1W

FIG. 4 Out-of-Plane Cracking Limits

NOTE 13—Crack tip branching has been noted to occur. This characteristic is not incorporated into the computation of ΔK. As a result, crack branching, or bifurcating, may be a source of variability in measured fatigue crack growth rate data. Data recorded during branching must be noted as being for a branching crack.

8.8.3.1 If nonvisual methods for crack size measurement are used and nonsymmetric or angled cracking occurs, the nonvisual measurements derived during these periods shall be verified with visual techniques to ensure the requirements of 8.8.3 are satisfied.

9. Calculation and Interpretation of Results

9.1 *Crack Curvature Correction*—After completion of testing, examine the fracture surfaces, preferably at two locations (for example, at the precrack and terminal fatigue crack sizes), to determine the extent of through-thickness crack curvature (commonly termed *crack tunneling*). If a crack contour is visible, calculate a three-point, through-thickness average crack size in accordance with Test Method E399, sections on General Procedure related to Specimen Measurement; specifically the paragraph on crack size measurement. The difference between the average through-thickness crack size and the corresponding crack size recorded during the test (for example, if visual measurements were obtained this might be the average of the surface crack size measurements) is the crack curvature correction.

9.1.1 If the crack curvature correction results in a greater than 5 % difference in calculated stress-intensity factor at any crack size, then employ this correction when analyzing the recorded test data.

9.1.2 If the magnitude of the crack curvature correction either increases or decreases with crack size, use a linear interpolation to correct intermediate data points. Determine this linear correction from two distinct crack contours separated by a minimum spacing of 0.25W or B, whichever is greater. When there is no systematic variation of crack curvature with crack size, employ a uniform correction determined from an average of the crack contour measurements.

AVA Documents
Document Sharing Hub

Full document details: ASTM E647-24

9.1.3 When employing a crack size monitoring technique other than visual, a crack curvature correction is generally incorporated in the calibration of the technique. However, since the magnitude of the correction will probably depend on specimen thickness, the preceding correction procedures may also be necessary.

9.2 *Determination of Crack Growth Rate*—The rate of fatigue crack growth is to be determined from the crack size versus elapsed cycles data (a versus N). Recommended approaches which utilize the secant or incremental polynomial methods are given in Appendix X1. Either method is suitable for the K-increasing, constant ΔP test. For the K-decreasing tests where force is shed in decremental steps, as in Fig. 3, the secant method is recommended. A crack growth rate determination shall not be made over any increment of crack extension that includes a force step. Where shedding of K is performed continuously with each cycle by automation, the incremental polynomial technique is applicable.

NOTE 14—Both recommended methods for processing a versus N data are known to give the same average da/dN response. However, the secant method often results in increased scatter in da/dN relative to the incremental polynomial method, since the latter numerically" smooths" the data (**20, 28**). This apparent difference in variability introduced by the two methods needs to be considered, especially in utilizing da/dN versus ΔK data in design.

9.3 *Determination of Stress-Intensity Factor Range, ΔK*—Use the appropriate crack size values as described in the particular specimen annex to calculate the stress-intensity range corresponding to a given crack growth rate.

9.4 *Determination of a Fatigue Crack Growth Threshold*—The following procedure provides an operational definition of the threshold stress-intensity factor range for fatigue crack growth, ΔK_{th}, which is consistent with the general definition of 3.3.1.

9.4.1 Determine the best-fit straight line from a linear regression of log da/dN versus log ΔK using a minimum of five da/dN, ΔK data points of approximately equal spacing between growth rates of 10^{-9} and 10^{-10} m/cycle. Having specified the range of fit in terms of da/dN requires that log ΔK be the dependent variable in establishing this straight line fit.

NOTE 15—Limitations of the linear regression approach of 9.4.1 are described in Ref (**29**). Alternative nonlinear approaches and their advantages are also given in Ref (**29**).

9.4.2 Calculate the ΔK-value that corresponds to a growth rate of 10^{-10} m/cycle using the above fitted line; this value of ΔK is defined as ΔK_{th} according to the operational definition of this test method.

NOTE 16—In the event that lower da/dN data are generated, the above procedure can be used with the lowest decade of data. This alternative range of fit must then be specified according to 10.1.12.

10. Report

10.1 The report shall include the following information:

10.1.1 Specimen type, including thickness, B, and width, W. If the M(T) specimen is used, or if a specimen type not described in this test method is used, a figure of the specimen and grips shall be provided.

10.1.2 Description of the test machine and equipment used to measure crack size and the precision with which crack size measurements were made.

10.1.3 Test material characterization in terms of heat treatment, chemical composition, and mechanical properties (include at least the 0.2 % offset yield strength and either elongation or reduction in area measured in accordance with Test Methods E8/E8M). Product size and form (for example, sheet, plate, and forging) shall also be identified. Method of stress relief, if applicable, shall be reported. For thermal methods, details of time, temperature and atmosphere. For non-thermal methods, details of forces and frequencies.

10.1.4 The crack plane orientation according to the code given in Test Method E1823, Appendix A. In addition, if the specimen is removed from a large product form, its location with respect to the parent product shall be given.

10.1.5 The terminal values of ΔK, R and crack size from fatigue precracking. If precrack forces were stepped-down, the procedure employed shall be stated and the amount of crack extension at the final force level shall be given.

10.1.6 Test loading variables, including ΔP, R, cyclic frequency, and cyclic waveform.

10.1.7 Environmental variables, including temperature, chemical composition, pH (for liquids), and pressure (for gases and vacuum). For tests in air, the relative humidity shall be reported. For tests in inert reference environments, such as dry argon, estimates of residual levels of water and oxygen in the test environment (generally this differs from the analysis of residual impurities in the gas supply cylinder) shall be given. Nominal values for all of the above environmental variables, as well as maximum deviations throughout the duration of testing, shall be reported. Also, the material employed in the chamber used to contain the environment and steps taken to eliminate chemical/electrochemical reactions between the specimen-environment system and the chamber shall be described.

10.1.8 Analysis methods applied to the data, including the technique used to convert a versus N to da/dN, specific procedure used to correct for crack curvature, and magnitude of crack curvature correction.

10.1.9 The specimen K-calibration and size criterion to ensure predominantly elastic behavior (for specimens not described in this test method).

10.1.10 da/dN as a function of ΔK shall be plotted. (It is recommended that ΔK be plotted on the abscissa and da/dN on the ordinate. Log-log coordinates are commonly used. For optimum data comparisons, the size of the ΔK-log cycles should be two or three times larger than da/dN-log cycles.) All data that violate the size requirements of the appropriate specimen annex shall be identified; state whether σ_{YS} or σ_{FS} was used to determine specimen size.

NOTE 17—The definition of σ_{FS} is provided in 7.2.1.

10.1.11 Description of any occurrences that appear to be related to anomalous data (for example, transients following test interruptions or changes in loading variables).

10.1.12 For K-decreasing tests, report C and initial values of K and a. Indicate whether or not the K-decreasing data were verified by K-increasing data. For near-threshold growth rates, report ΔK_{th}, the equation of the fitted line used to

AVA Documents
Document Sharing Hub

Full document details: ASTM E647-24

establish ΔK_{th}, and any procedures used to establish ΔK_{th} which differ from the operational definition of 9.4. Also report the lowest growth rate used to establish ΔK_{th} using the operational definition of 9.4. It is recommended that these values be reported as $\Delta K_{th}(x)$ where x is the aforementioned lowest growth rate in m/cycle.

10.1.13 The following information shall be tabulated for each test: a, N, ΔK, da/dN, and, where applicable, the test variables of 10.1.3, 10.1.6, and 10.1.7. Also, all data determined from tests on specimens that violate the size requirements of the appropriate specimen annex shall be identified; state whether σ_{YS} or σ_{FS} was used to determine specimen size.

11. Precision and Bias

11.1 *Precision*—The precision of da/dN versus ΔK is a function of inherent material variability, as well as errors in measuring crack size and applied force. The required loading precision of 8.4.1 can be readily obtained with modern closed-loop electrohydraulic test equipment and results in a ±2 % variation in the applied ΔK; this translates to a ±4 % to ±10 % variation in da/dN, at a given ΔK, for growth rates above the near-threshold regime. However, in general, the crack size measurement error makes a more significant contribution to the variation in da/dN, although this contribution is difficult to isolate since it is coupled to the analysis procedure for converting a versus N to da/dN, and to the inherent material variability. Nevertheless, it is clear that the overall variation in da/dN is dependent on the ratio of crack size measurement interval to measurement error (**28, 30**). Furthermore, an optimum crack size measurement interval exists due to the fact that the interval should be large compared to the measurement error (or precision), but small compared to the K-gradient of the test specimen. These considerations form the basis for the recommended measurement intervals as given in the appropriate specimen annex. Recommendations are specified relative to crack size measurement precision: a quantity that must be empirically established for the specific measurement technique being employed.

11.1.1 Although it is often impossible to separate the contributions from each of the above-mentioned sources of variability, an overall measure of variability in da/dN versus ΔK is available from results of an interlaboratory test program in which 14 laboratories participated (**20**).[6] These data, obtained on a highly homogeneous 10 Ni steel, showed the repeatability in da/dN (within a laboratory) to average ±27 % and range from ±13 to ±50 %, depending on laboratory; the reproducibility (between laboratories) was ±32 %. Values cited are standard errors based on ±2 residual standard deviations about the mean response determined from regression analysis. In computing these statistics, abnormal results from two laboratories were not considered due to improper precracking and suspected errors in force calibration. Such problems would be avoided by complying with the current requirements of this test method as they have been upgraded since the interlaboratory test program was conducted. Because a highly homogeneous material was employed in this program, the cited variabilities in da/dN are believed to have arisen primarily from random crack size measurement errors.

11.1.1.1 A more recent interlaboratory test program (**31**)[7] in which 18 laboratories participated (141 total fatigue crack growth rate tests) examined the variability obtained on three commonly used materials: 4130 steel (normalized and heat-treated) bar, 7075 T6 sheet, and 2024 T351 sheet. The data for the steel alloy showed the reproducibility in da/dN to be ±31%, whereas an average of ±41% for the aluminum alloys. The repeatability (within a laboratory) was ±20% for the steel alloy and ±25% for the aluminum alloys. The reproducibility of a grouped population of all alloys tested ranged from a low of ±9% to typically ±43 to ±50%. This data suggests that there is little statistical change in variability between this and the previous (**20**) interlaboratory test program. However, the data suggests some effect of secondary variables on the variability levels. For instance, the influence of specimen geometry was noted with M(T) specimens exhibiting variability levels that are 30-40% less than similar C(T) specimens. A comparison between tests performed using DCPD and compliance as the continuous, non-visual crack size measurement suggests that variability levels are 20% less for DCPD when compared to compliance. Conversely, no discernable difference in variability level was noted between different load control methods (constant amplitude versus K-control).

11.1.2 For the near-threshold regime, a measure of the variability in ΔK_{th} is available from the results of an interlaboratory test program in which 15 laboratories participated (**32**).[8] These data, obtained on a homogeneous 2219 T851 aluminum alloy, show a repeatability in ΔK_{th} (within a laboratory) to average ±3 % with the reproducibility (between laboratories) of ±9 %. This observation is based on the 11 laboratories that provided valid near-threshold data. Because of the sensitivity of da/dN to small changes in ΔK, growth rates in this near threshold regime often vary by an order of magnitude, or more, at a given ΔK (**32**).[6]

11.1.3 It is important to recognize that for purposes of design or reliability assessment, inherent material variability often becomes the primary source of variability in da/dN. The variability associated with a given lot of material is caused by inhomogeneities in chemical composition, microstructure, or both. These same factors coupled with varying processing conditions give rise to further lot-to-lot variabilities. An assessment of inherent material variability, either within or between heats or lots, can only be determined by conducting a statistically planned test program on the material of interest. Thus, results cited above from the interlaboratory test programs on 10 Ni steel and 2219–T851 aluminum, materials selected to minimize material variability and therefore allow an assessment of measurement precision, are not generally applicable to questions regarding inherent variability in other materials.

[6] Supporting data have been filed at ASTM International Headquarters and may be obtained by requesting Research Report RR:E24-1001.

[7] Supporting data have been filed at ASTM International Headquarters and may be obtained by requesting Research Report RR:E08-1007.

[8] Supporting data have been filed at ASTM International Headquarters and may be obtained by requesting Research Report RR:E24-1009.

AVA Documents
Document Sharing Hub

Full document details: ASTM E647-24

11.2 *Bias*—There is no accepted "standard" value for d*a*/d*N* versus Δ*K* for any material. In the absence of such a true value, no meaningful statement can be made concerning bias of data.

12. Keywords

12.1 constant amplitude; crack size; fatigue crack growth rate; stress-intensity factor range

ANNEXES

(Mandatory Information)

A1. THE COMPACT SPECIMEN

A1.1 Introduction

A1.1.1 The compact specimen, C(T), is a single edge-notch specimen loaded in tension.

A1.1.2 The C(T) specimen has the advantage over many other specimen types in that it requires the least amount of test material to evaluate crack growth behavior.

A1.1.3 The C(T) specimen is not recommended for tension-compression testing because of uncertainties introduced into the loading experienced at the crack tip.

A1.1.4 The C(T) specimen is not recommended for materials that utilize a whisker-type of discontinuous reinforcement and are anisotropic in nature; rather, the M(T) or ESE(T) specimens should be used.[9]

A1.2 Specimen

A1.2.1 The geometry of the standard C(T) specimen is given in Fig. A1.1.

A1.2.2 The thickness, *B*, and width, *W*, may be varied independently within the following limits, which are based on specimen buckling and through-thickness crack-curvature considerations:

A1.2.2.1 For C(T) specimens it is recommended that thickness be within the range $W/20 \leq B \leq W/4$. Specimens having thicknesses up to and including *W*/2 may also be employed; however, data from these specimens will often require through-thickness crack curvature corrections as listed in Section 9.1 of the main body of E647. In addition, difficulties may be encountered in meeting the through-thickness crack straightness requirements listed in Section 8 *Procedure* section of the main body of E647.

A1.2.3 In the C(T) specimen (Fig. A1.1), *a* is measured from the line connecting the bearing points of force application.

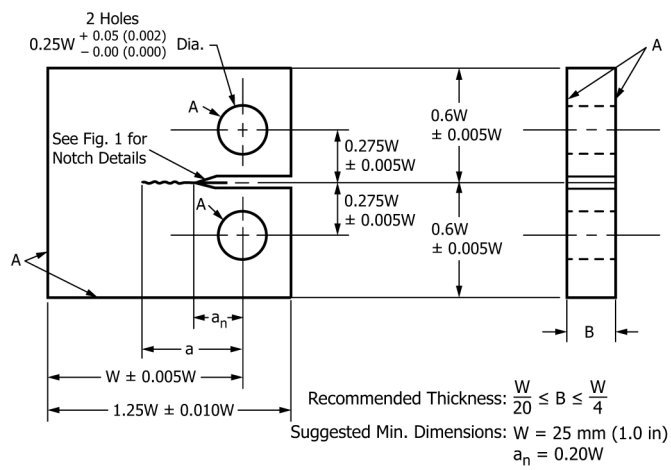

NOTE 1—Dimensions are in millimetres (inches).

NOTE 2—*A*-surfaces shall be perpendicular and parallel as applicable to within ±0.002 *W*, TIR.

NOTE 3—The intersection of the tips of the machined notch (a_n) with the specimen faces shall be equally distant from the top and bottom edges of the specimen to within 0.005 *W*.

NOTE 4—Surface finish, including holes, shall be 1.6 µm (63 µin.) or better. A surface finish of 0.8 µm (32 µin.) or better on the specimen faces may provide a better surface for making optical measurements of the crack.

FIG. A1.1 Standard Compact C(T) Specimen for Fatigue Crack Growth Rate Testing

A1.2.4 It is required that the machined notch, a_n, in the C(T) specimen be at least 0.2*W* in length so that the *K*-calibration is not influenced by small variations in the location and dimensions of the loading-pin holes.

A1.2.5 Notch and precracking details for the C(T) specimen are given in Fig. 2 of the main body of E647.

A1.2.6 *Specimen Size*—In order for results to be valid according to this test method it is required that the specimen be predominantly elastic at all values of applied force. The minimum in-plane specimen sizes to meet this requirement are

[9] Subcommittee E08.09 has performed an interlaboratory test program on a material of this type. Reference (33) provided the results of this effort.

Documents
Document Sharing Hub
Full document details: ASTM E647-24

based primarily on empirical results and are specific to specimen configuration (**11**).

A1.2.6.1 For the C(T) specimen the following is required:

$$(W - a) \geq (4/\pi)(K\max/\sigma_{YS})^2 \quad (A1.1)$$

where:

$(W - a)$ = specimen's uncracked ligament (Fig. A1.1), and
σ_{YS} = 0.2 % offset yield strength determined at the same temperature as used when measuring the fatigue crack growth rate data.

NOTE A1.1—For high-strain hardening materials, see Note 6 of the main body of E647.

A1.2.7 *Pin-Loading Holes*—For *K*-decreasing testing, if crack straightness issues are encountered or expected, the pinholes may be beveled or counter-bored (Fig. A1.3) to minimize out-of-plane bending due to pin and hole contact and to maintain straight crack fronts (**34, 35**). The parallelism of the pins in the clevises should also be checked. The centerline flat section, B_F, should be approximately 0.2B or 2.5 mm (0.1 in.), whichever is larger.

NOTE A1.2—When testing under high applied forces, care should be taken to avoid having too small a loading surface, which may lead to breaking loading pins due to excessive bending or deformation of the loading surface.

A1.3 Apparatus

A1.3.1 *Grips and Fixtures for C(T) Specimens*—A clevis and pin assembly (Fig. A1.2) is used at both the top and bottom of the specimen to allow in-plane rotation as the specimen is loaded. This specimen and loading arrangement is to be used for tension-tension loading only.

A1.3.1.1 Suggested proportions and critical tolerances of the clevis and loading pin are given (Fig. A1.2) in terms of either the specimen width, *W*, or the specimen thickness, *B*, since these dimensions may be varied independently within certain limits.

A1.3.1.2 The pin-to-hole clearances illustrated in Fig. A1.2 are designed to reduce nonlinear force vs. displacement behavior caused by rotation of the specimen and pin (**36**). Using this arrangement to test materials with relatively low yield strength may cause plastic deformation of the specimen hole. Similarly, when testing high strength materials or when the clevis opening exceeds 1.05B (or both), a stiffer loading pin (that is, >0.225*W*) may be required. In these cases, a flat bottom clevis hole or bearings may be used with the appropriate loading pins (D = 0.24*W*) as indicated in Fig. A1.4. The use of high viscosity lubricants such as grease may introduce hysteresis in the force vs. displacement behavior and is not recommended.

A1.3.1.3 Using a 1000-MPa (150-ksi) yield-strength alloy (for example, AISI 4340 steel) for the clevis and pins provides adequate strength and resistance to galling and fatigue.

A1.4 Procedure

A1.4.1 Make crack size measurements at intervals such that d*a*/d*N* data are nearly evenly distributed with respect to Δ*K*. For the C(T) specimen, the suggested intervals are:

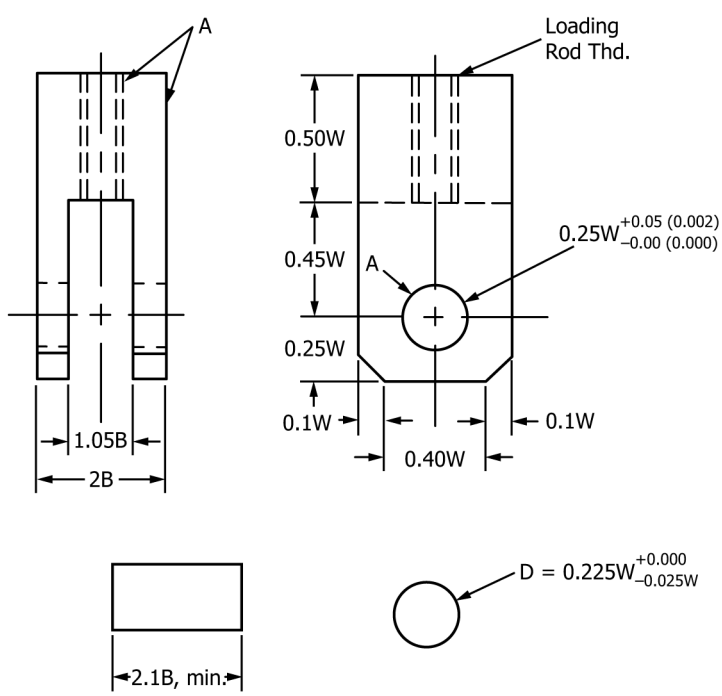

NOTE 1—Dimensions are in millimeters (inches).
A-surfaces shall be perpendicular and parallel as applicable to within ± 0.05 mm (0.002 in.) TIR.
Surface finish of holes and loading pins shall be 0.8 (32) or better.

FIG. A1.2 Clevis and Pin Assembly for Gripping C(T) Specimens

Documents
Document Sharing Hub

Full document details: ASTM E647-24

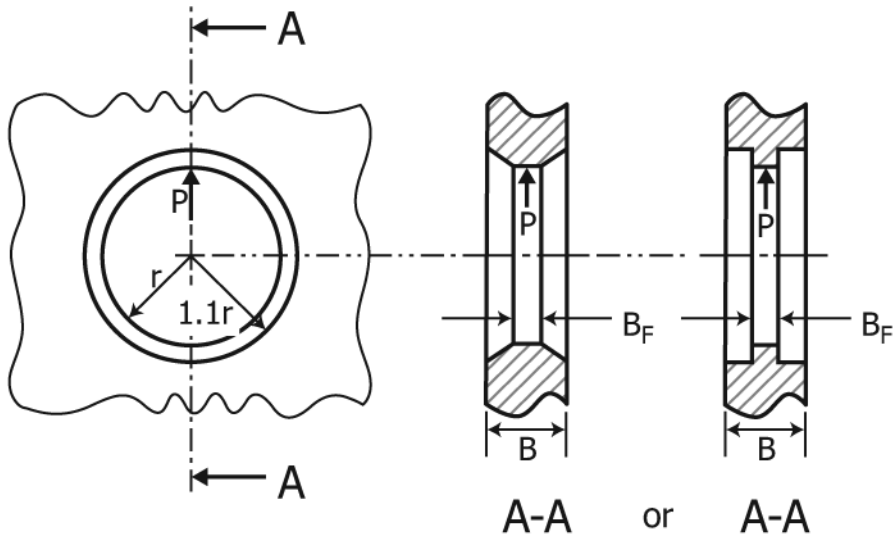

FIG. A1.3 Beveled or Counter-bored Holes in C(T) Specimen

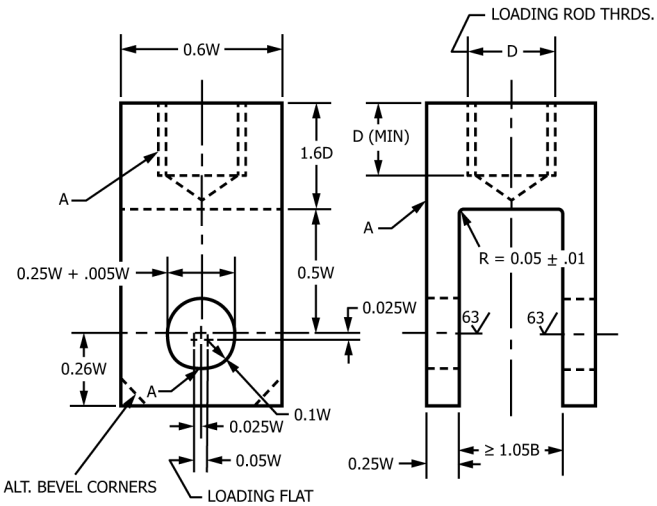

NOTE 1—Pin diameter = 0.24 W – 0.005 W.

NOTE 2—Flat bottom hole is a modified Test Method E399 design.

NOTE 3—Corners of clevis may be removed if necessary to accommodate clip gage.

A—surfaces must be flat, in-line, and perpendicular, as applicable, to within 0.05 mm.

FIG. A1.4 Two Suggested Clevis Designs for C(T) Specimen Testing

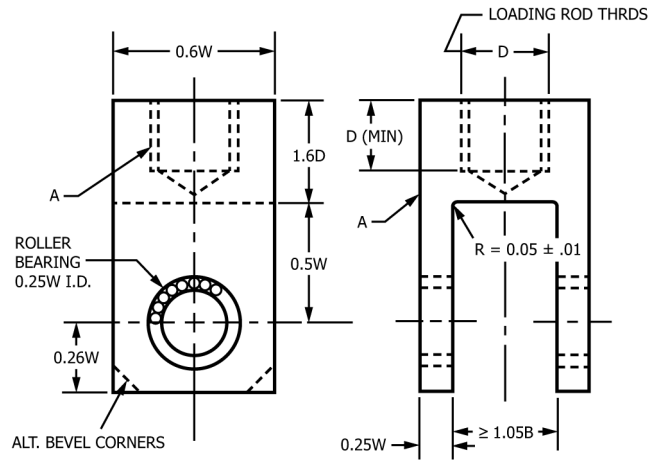

NOTE 1—Because of space requirements for the bearings, this grip is not practicable for small specimens.

A—surfaces must be flat, in-line, and perpendicular, as applicable, to within 0.05 mm.

FIG. A1.4 *(continued)*

$$\Delta a \leq 0.04\ W \text{ for } 0.25 \leq a/W \leq 0.40 \qquad (A1.2)$$

$$\Delta a \leq 0.02W \text{ for } 0.40 \leq a/W \leq 0.60$$

$$\Delta a \leq 0.01\ W \text{ for } a/W \geq 0.60$$

If crack size is measured visually, the average value of the two surface crack lengths for the C(T) specimen should be used in all calculations of growth rate and K when using the K expression listed in A1.5.1.1. Further crack symmetry requirements are given in Section 8.3.4 of the main body of E647. Out-of-plane cracking limits are given in Section 8.8.3 of the main body of E647.

A1.5 Calculation and Interpretation of Results

A1.5.1 *Determination of Stress-Intensity Factor Range, ΔK*- Use the crack size values of Section 9.1 of the main body of E647 and Appendix X1 to calculate the stress-intensity range corresponding to a given crack growth rate from the following expressions:

A1.5.1.1 For the C(T) specimen calculate ΔK as follows:

$$\Delta K = \frac{\Delta P}{B\sqrt{W}} \frac{(2+\alpha)}{(1-\alpha)^{3/2}} \left(0.886 + 4.64\alpha - 13.32\alpha^2 + 14.72\alpha^3 - 5.6\alpha^4\right) \qquad (A1.3)$$

where $\alpha = a/W$; expression valid for $a/W \geq 0.2$ (**37**, **38**).

NOTE A1.3—Implicit in the above expression is the assumption that the test material is linear-elastic, isotropic, and homogeneous.

NOTE A1.4—The above operational definition does not include potential effects of residual stress or crack closure on the computed ΔK value. Autographic force versus crack mouth opening displacement records are

AVA Documents
Document Sharing Hub

Full document details: ASTM E647-24

useful for detecting and correcting residual stress/crack closure influences (**5**).

A1.5.1.2 Check for compliance with the specimen size requirements of A1.2.6.

A1.5.2 *Determination of Crack Size by Compliance*—The crack size of a C(T) specimen can be determined by compliance procedures outlined in Annex A5.

A1.5.2.1 *Front-face compliance*—Theoretical compliance expressions for the specific measurement locations on the C(T) specimen are presented in Fig. A1.5 (**39**). Additional measurement locations are available through the use of rotation coefficients. This equation is for plane stress since this stress state is most applicable to measurements remote to the crack tip, regardless of the stress state local to the crack tip.

NOTE A1.5—For a C(T) specimen of $W = 40$ mm, a gage located at any of the four locations shown in Fig. A1.5 and calibrated to 50 µm/volt on a ±10 volt range will generally provide sufficient resolution.

A1.5.2.2 *Back-face compliance*—The following expression was derived for monitoring crack size by measuring strains at the back-face. Here, back-face strain, ε, is measured at a location along the crack plane, as shown in Fig. X2.1 of the standard. This equation is valid when the ratio of strain gage length, l, to specimen width, W, falls within $0 \leq l/W \leq 0.05$. (**41**)

$$a/W = N_0 + N_1 U + N_2 U^2 + N_3 U^3 + N_4 U^4 + N_5 U^5 \qquad \text{(A1.4)}$$

where:

U = $1/[A^{1/2} + 1]$
A = $|\varepsilon EBW/P|$
N_0 = 1.0033
N_1 = -2.35
N_2 = 1.3694
N_3 = -15.294
N_4 = 63.182
N_5 = -74.42
for $0.2 < a/W < 0.95$.

A1.5.2.3 Gripping techniques for specimens that undergo bending, such as the C(T) specimen, have been observed to affect compliance readings. The C(T) specimen may be loaded with grips that have either flat bottom holes or needle bearings, as shown in Fig. A1.4, to circumvent such problems.

A1.5.3 *Determination of Crack Size by Electric Potential Difference (EPD)*—The crack size of a C(T) specimen can be determined by electric potential difference (EPD) procedures outlined in Annex A6.

A1.5.3.1 *C(T) Geometry Voltage versus Crack Size Relationships*—An example of a voltage versus crack size relationship for the C(T) specimen geometry is shown in Eq A1.5. The expression was developed by Hicks and Pickard from finite element analysis and was verified through both analogue and experimental techniques for a/W ranging from 0.24 to 0.7 (**42**). This equation has been employed in two multi-laboratory, international co-operative testing efforts (**43, 44**).

$$V/V_r = A_o + A_1(a/W) + A_2(a/W)^2 + A_3(a/W)^3 \qquad \text{(A1.5)}$$

$$\text{for } 0.24 \leq a/W \leq 0.7$$

where:

V = the measured EPD voltage,
V_r = the reference crack voltage corresponding to a/W = 0.241,
a = the crack size (as defined in Test Method E647),
W = the specimen width,
A_o = 0.5766,
A_1 = 1.9169,
A_2 = –1.0712, and
A_3 = 1.6898

or in reverse notation:

$$a/W = B_o + B_1(V/V_r) + B_2(V/V_r)^2 + B_3(V/V_r)^3 \qquad \text{(A1.6)}$$

$$\text{for } 0.24 \leq a/W \leq 0.7$$

where:

B_o = –0.5051,
B_1 = 0.8857,
B_2 = –0.1398,
B_3 = 0.0002398.

A1.5.3.1.1 Fig. A1.6 illustrates the C(T) geometry and specific wire placement locations for this solution. The relationship is valid only for the wire locations shown, which were determined by a compromise between sensitivity and reproducibility. If alternative wire placements (current or voltage) are used, the relationship shown is no longer valid and a new relationship must be developed.

A1.5.3.1.2 Note that the first form of the equation can be used to compute the constant V_r from any reference a/W and corresponding voltage measurement V. Computing V_r in this way accounts linearly for small changes in applied current, measured specimen dimensions, and slight errors in wire placement from specimen to specimen. The computed reference voltage can then be used with the second form of the equation to determine the crack size for all voltage values V.

A1.5.3.2 *C(T) Geometry Voltage versus Crack Size Relationships*—Alternatively, a closed form analytical voltage versus crack size relationship for a C(T) specimen (**46**) has been developed by adapting the original Johnson's formulation (**47**) is shown below.

$$a = \frac{2W}{\pi}\cos^{-1}\left[\frac{\cosh\left(\frac{\pi}{2W} \times Y_o\right)}{\cosh\left[\frac{v}{v_r} \times \cosh^{-1}\left[\frac{\cosh\left(\frac{\pi}{2W} \times Y_o\right)}{\cos\left(\frac{\pi}{2W} \times a_r\right)}\right]\right]}\right] \qquad \text{(A1.7)}$$

$$for \quad 0 \leq \frac{a}{W} \leq 1$$

where:

V = the measured EPD voltage at a crack length a,
V_r = the measured EPD voltage at an initial crack length a_r
a = the crack size (as defined in Fig. A1.7),
W = the specimen width,
$2Y_o$ = the voltage measurement spacing in the loading direction (see Fig. A1.7).

Documents
Document Sharing Hub

Full document details: ASTM E647-24

A1.5.3.2.1 Fig. A1.7 illustrates the C(T) geometry and specific wire placement locations that have been demonstrated for this solution (**48**). If alternative wire placements (current) are used, the relationship must be verified.

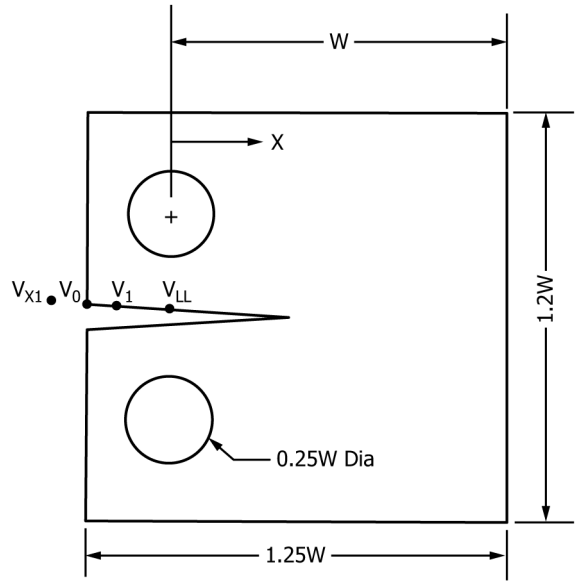

Meas. Location	X/W	C_0	C_1	C_2	C_3	C_4	C_5
			C(T) Specimen				
V_{X1}	−0.345	1.0012	−4.9165	23.057	−323.91	1798.3	−3513.2
V_0	−0.250	1.0010	−4.6695	18.460	−236.82	1214.9	−2143.6
V_1	−0.1576	1.0008	−4.4473	15.400	−180.55	870.92	−1411.3
V_{LL}	0	1.0002	−4.0632	11.242	−106.04	464.33	−650.68

$$\alpha = a/W = C_0 + C_1 u_X + C_2 u_X^2 + C_3 u_X^3 + C_4 u_X^4 + C_5 u_X^5$$

$$u_x = \left\{ \left[\frac{EvB}{P} \right]^{\frac{1}{2}} + 1 \right\}^{-1}$$

$$0.2 \leq a/W \leq 0.975$$

FIG. A1.5 Normalized Crack Size as a Function of Plane Stress Elastic Compliance for C(T) Specimens (40).

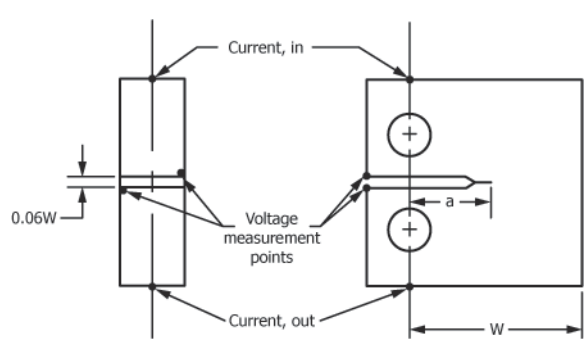

FIG. A1.6 C(T) Geometry and Electric Potential Wire Placement Locations for Eq A1.5(45)

Documents
Document Sharing Hub
Full document details: ASTM E647-24