This international standard was developed in accordance with internationally recognized principles on standardization established in the Decision on Principles for the Development of International Standards, Guides and Recommendations issued by the World Trade Organization Technical Barriers to Trade (TBT) Committee.

Designation: E670 – 09 (Reapproved 2020)

Standard Test Method for Testing Side Force Friction on Paved Surfaces Using the Mu-Meter[1]

This standard is issued under the fixed designation E670; the number immediately following the designation indicates the year of original adoption or, in the case of revision, the year of last revision. A number in parentheses indicates the year of last reapproval. A superscript epsilon (ε) indicates an editorial change since the last revision or reapproval.

1. Scope

1.1 This test method covers the measurement of the side force friction of paved surfaces utilizing a device commonly called a Mu-Meter.[2]

1.2 This test method utilizes a measurement obtained by pulling the Mu-Meter, containing two freely rotating test wheels angled to the direction of motion, over a pavement surface at a constant speed while the test wheels are under a constant static load. This method provides data of the side force friction (and other data) along the whole length of the test surface being tested which is applied to a variety of computerized algorithms enabling the production of results, including (but not limited to) rolling averages, numeric and graphical representations, friction mapping, and reports formatted in the layout approved by a wide variety of national airport regulators.

1.3 The values stated in inch-pound units are to be regarded as standard. The values given in parentheses are mathematical conversions to SI units that are provided for information only and are not considered standard.

1.4 *This standard does not purport to address all of the safety concerns, if any, associated with its use. It is the responsibility of the user of this standard to establish appropriate safety, health, and environmental practices and determine the applicability of regulatory limitations prior to use.* See also Section 6.

1.5 *This international standard was developed in accordance with internationally recognized principles on standardization established in the Decision on Principles for the Development of International Standards, Guides and Recommendations issued by the World Trade Organization Technical Barriers to Trade (TBT) Committee.*

2. Referenced Documents

2.1 *ASTM Standards:*[3]

D297 Test Methods for Rubber Products—Chemical Analysis

D412 Test Methods for Vulcanized Rubber and Thermoplastic Elastomers—Tension

D1054 Test Method for Rubber Property—Resilience Using a Goodyear-Healey Rebound Pendulum (Withdrawn 2010)[4]

D1765 Classification System for Carbon Blacks Used in Rubber Products

D2240 Test Method for Rubber Property—Durometer Hardness

D3182 Practice for Rubber—Materials, Equipment, and Procedures for Mixing Standard Compounds and Preparing Standard Vulcanized Sheets

E178 Practice for Dealing With Outlying Observations

E303 Test Method for Measuring Surface Frictional Properties Using the British Pendulum Tester

E1551 Specification for a Size 4.00-8 Smooth Tread Friction Test Tire

3. Summary of Test Method

3.1 The Mu-Meter consists of a trailer similar to the one in Fig. 1, which is towed by a vehicle.[2]

3.2 The test tires are positioned in the test mode. The Mu-Meter is brought to the desired test speed. Water (if applicable) is delivered ahead of the test tires and the beginning of the test is marked. The resulting sideways friction force acting between the test tires and the pavement surface is digitized and recorded in the volatile memory of the processor mounted on the trailer and subsequently displayed on the

[1] This test method is under the jurisdiction of ASTM Committee E17 on Vehicle - Pavement Systems and is the direct responsibility of Subcommittee E17.21 on Field Methods for Measuring Tire Pavement Friction.

Current edition approved June 1, 2020. Published June 2020. Originally approved in 1985. Last previous edition approved in 2015 as E670 – 09 (2015). DOI: 10.1520/E0670-09R20.

[2] The sole source of supply of the apparatus known to the committee at this time is Douglas Equipment Ltd, Douglas House, Village Road, Arle, Cheltenham, Gloucestershire UK GL51 0AB and Douglas Equipment International, 8305 Cherokee Boulevard, Douglasville, Douglas County, Atlanta, GA 30134 USA. If you are aware of alternative suppliers, please provide this information to ASTM International Headquarters. Your comments will receive careful consideration at a meeting of the responsible technical committee,[1] which you may attend.

[3] For referenced ASTM standards, visit the ASTM website, www.astm.org, or contact ASTM Customer Service at service@astm.org. For *Annual Book of ASTM Standards* volume information, refer to the standard's Document Summary page on the ASTM website.

[4] The last approved version of this historical standard is referenced on www.astm.org.

Copyright © ASTM International, 100 Barr Harbor Drive, PO Box C700, West Conshohocken, PA 19428-2959. United States

Documents
Document Sharing Hub

Full document details: ASTM E670-09(2020)

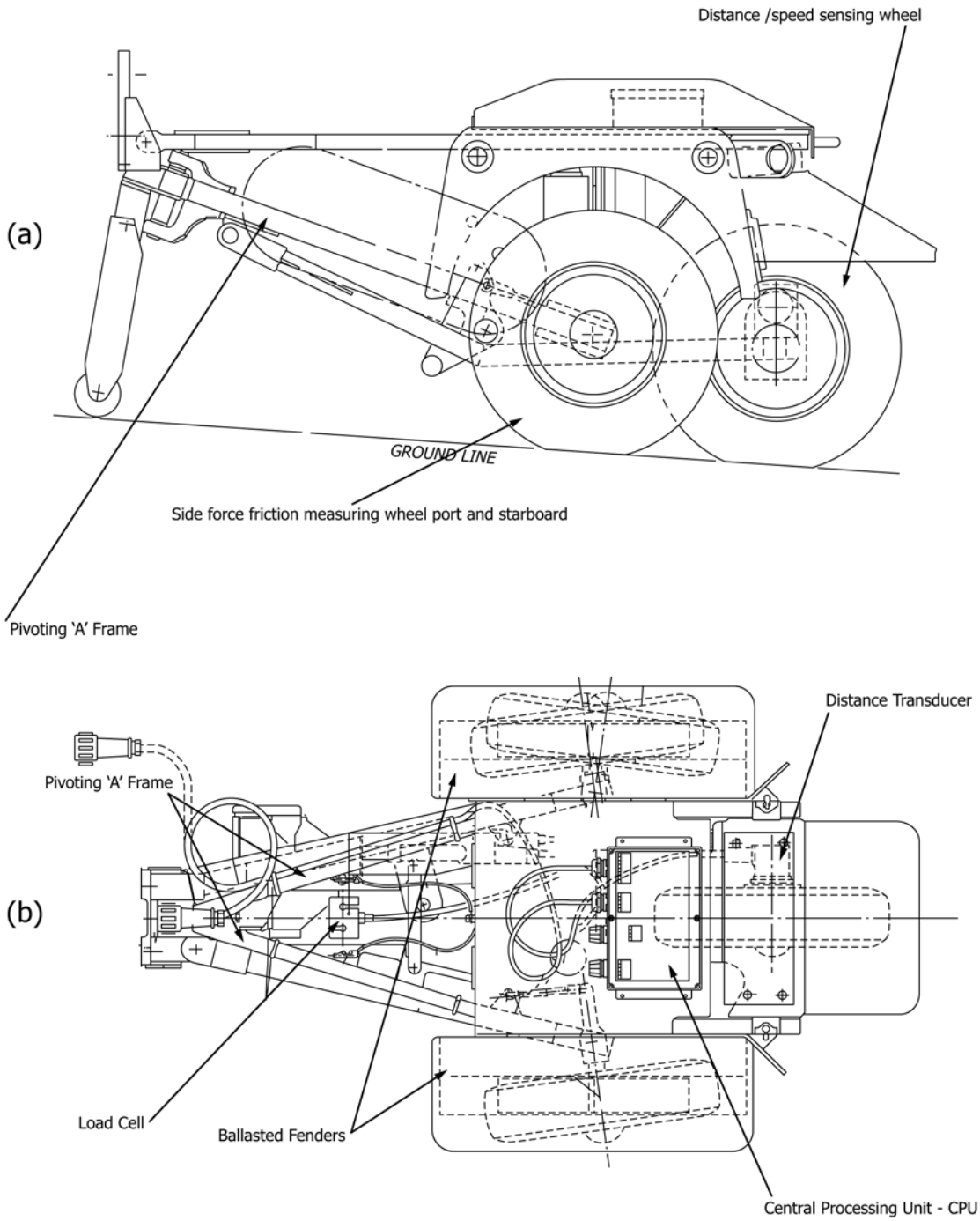

FIG. 1 Mu-Meter Schematics

in-cab monitor (usually a laptop or tablet computer) for subsequent display or downloading. The speed and distance traveled by the test vehicle are also recorded by integrated on-board systems.

Documents
Document Sharing Hub
Full document details: ASTM E670-09(2020)

3.3 The friction analysis is displayed on the in-cab monitor and can be downloaded to other PCs as required by the client for analysis utilizing the software provided. Results report the Mu number (MuN).[5]

4. Significance and Use

4.1 The knowledge of side force friction serves as an additional tool in characterizing pavement surfaces. Side force friction data alone may be of limited value in determining the suitability of paving materials or finishing techniques. However, when used in conjunction with other physical and chemical tests, the side force friction may contribute to characterization of pavement surfaces.

4.2 The values measured with the equipment and procedures stated herein do not necessarily agree or correlate directly with those obtained by other paved surface friction measuring methods.

5. Apparatus

5.1 *Tow Vehicle*—The tow vehicle shall be capable of towing the Mu-Meter at a speed of at least 40 mph (65 km/h) and maintaining this speed within ±0.5 mph (0.8 km/h). If tests are conducted at speeds greater than 40 mph, the vehicle shall be capable of maintaining these speeds within ±1 mph (1.5 km/h). The vehicle shall have a suitable towing hitch of either ring eye or ball hitch design. The towing ball/hook shall be placed so that the standard datum line on the Mu-Meter is 12 ± 0.5 in. (305 ± 13 mm) from the ground. In either case, the hitch height shall not vary more than 2 in. (51 mm) between the loaded and unloaded towing vehicle condition.

5.2 *General Requirements for Measuring System*—The instrumentation system shall conform to the following overall requirements at ambient temperatures between 40 and 100 °F (4 and 38 °C) as follows:

-Overall system accuracy ±3 % of full scale
-Time stability calibration 10 h minimum
-The exposed portions of the measuring system shall tolerate 100 % relative humidity (rain or spray) and all other adverse conditions such as dust, shock, and vibrations that may be encountered in pavement test operations.

5.2.1 *Trailer*—The trailer configuration for testing shall be essentially as shown in Fig. 1 with the two test wheels, each mounted so that when the measuring position is selected the front of each wheel shall be splayed out to angle of 7.50° ± 0.75° (15.00° inclusive angle) relative to the centerline of the Mu-Meter. The two test wheels are mounted on frames joined at the towbar on a needle bearing which allows them to pivot relative to each other, such travel limited by sensitive strain gauge, which senses the side force friction, generated between the wheels. The rear-centralized wheel operates a distance encoder, which is utilized by the system to measure distance traveled and via an internal clock speed.

5.2.2 *Force Cell*—The geometry of the chassis structure within the measuring A-frame fabrication ensures that the load cell is mounted in a position such that 500 lbf (2225 N) of tensile force is equivalent to the side force exerted by the wheels on a pavement having a MuN (Mu number) of 100. The extension of the load cell during a test shall be sufficiently small to limit the movement of the measuring wheels in such a way that the total included angle between the test tires does not change by more than 0.5° during the test. The load cell shall provide an output directly proportional to the force with hysteresis less than 2 % of the applied load up to the maximum expected loading, and sensitivity to any expected cross-axis loading less than 2 % of the applied load. The load cell shall be mounted in such a manner as to experience less than 1° angular rotation from the horizontal plane at the maximum expected loading.

5.2.3 *Wheel Load*—The apparatus shall have the following vertical static loads when the unit is in the toe-out position ready for testing and when the tires are inflated to their proper pressures:

Each test wheel 171 ± 2 lbf (761 ± 9 N)
Rear wheel 118 to 138 lbf (525 to 614 N)
Towing hitch 80 lbf (360 N)

5.2.4 *Tires (see Annex A1 – Annex A3):*

5.2.4.1 The Mu-Meter will be fitted with tires manufactured to Specification E1551. The tire pressure in the two test wheels shall be 10 ± 0.5 psi (69 ± 3 kPa) measured at ambient temperature (cold).

5.2.4.2 The rear-stabilizing tire shall be treaded and shall be the same size as the test tires. Tire pressure in the rear-stabilizing tire shall be 30 ± 2 psi (207 ± 14 kPa) measured at ambient temperature (cold).

5.2.5 *Processor CPU*—The CPU shall record and interpret the data output of the load cell over the range 0 to 500 lbf (0 to 2225 N) and store the processed data within its volatile memory and on the cab laptop nominated drive. The CPU shall also store unlimited event markers (dependant on display definition and pixilation). The CPU will also store and process the start and end position of each run, the time of start, and other information inputted manually by the operator for run referencing at a later date.

5.2.6 *Vehicle Speed Measuring Encoder*—The distance and speed encoders shall provide speed resolution and accuracy of ±1.5 % of the indicated speed or ±0.5 mph (±0.8 km/h), whichever is greater. The output shall be directly viewable by the operator. The speed shall be recorded.

5.3 *Pavement Wetting System:*

5.3.1 The water shall be applied to the pavement ahead of the test tires utilizing a nozzle manufactured to the dimensions conforming to Fig. 2. For airport runways, the recommended quantity of water applied shall be proportional to test speed and to provide a depth of 0.020 in. (0.5 mm) over a width at least 1 in. (25 mm) wider than the toed-out test tire pavement width and applied so the tire is centrally located between the wetted edges during the actual testing.

5.3.2 The nozzle configuration and position shall ensure that the nozzle centerline is pointed toward the paved surface at an angle of 25 ± 2°. The water shall strike the paved surface 6 to 8 in. (150 to 200 mm) ahead of the vertical centerline of the Mu-Meter test tire. The nozzle shall be of such a height that it clears all obstacles that the Mu-Meter is expected to encounter

[5] Refer to manufacturers operational manual (SEDP316 Iss.10) for method of interpreting Mu numbers from the data.

AVA Documents
Document Sharing Hub

Full document details: ASTM E670-09(2020)

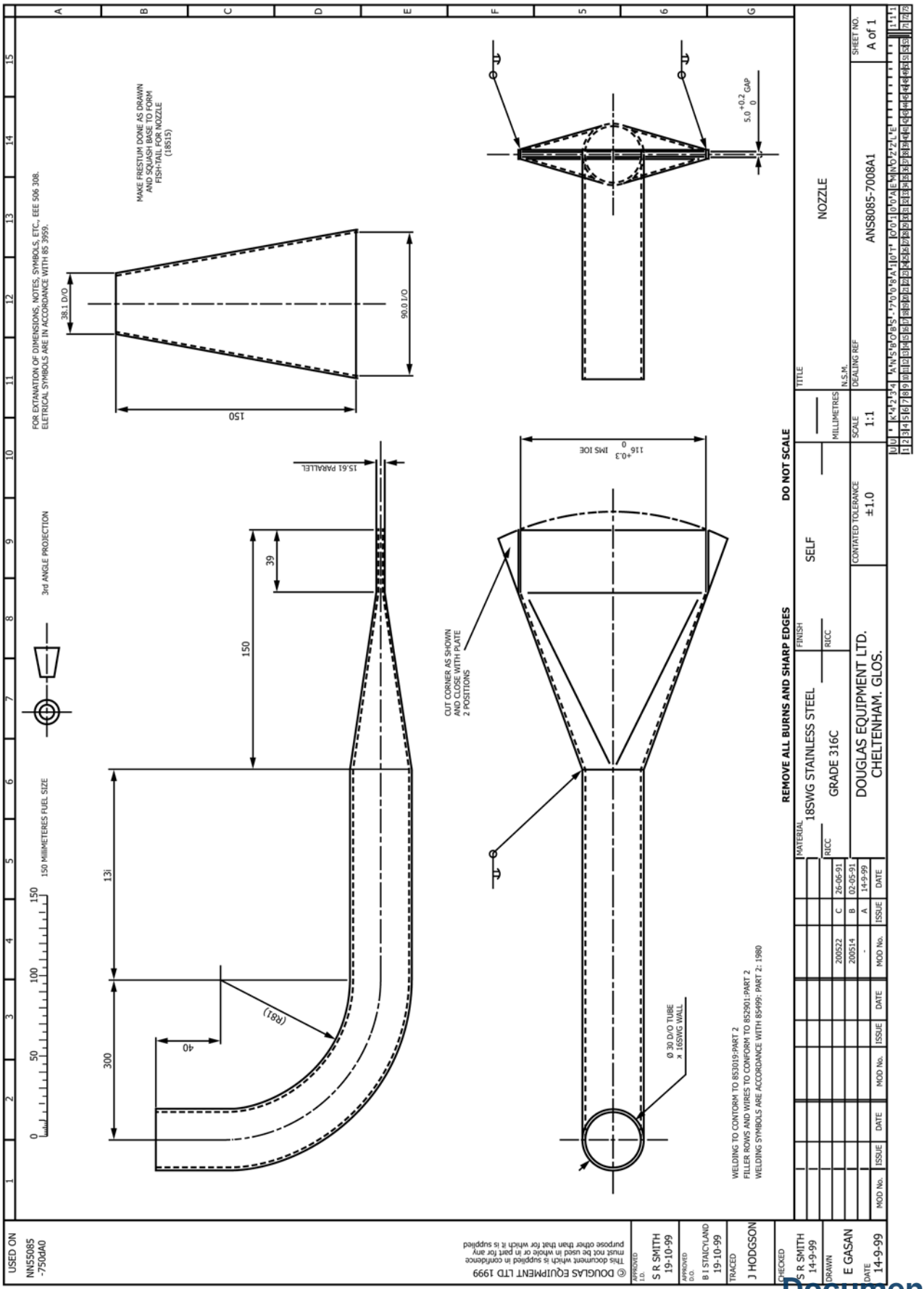

FIG. 2 Pavement Wetting

AVA Documents
Document Sharing Hub

Full document details: ASTM E670-09(2020)