This international standard was developed in accordance with internationally recognized principles on standardization established in the Decision on Principles for the Development of International Standards, Guides and Recommendations issued by the World Trade Organization Technical Barriers to Trade (TBT) Committee.

Designation: E709 – 21

Standard Guide for Magnetic Particle Testing[1]

This standard is issued under the fixed designation E709; the number immediately following the designation indicates the year of original adoption or, in the case of revision, the year of last revision. A number in parentheses indicates the year of last reapproval. A superscript epsilon (ε) indicates an editorial change since the last revision or reapproval.

1. Scope*

1.1 This guide[2] covers techniques for both dry and wet magnetic particle testing, a nondestructive method for detecting cracks and other discontinuities at or near the surface in ferromagnetic materials. Magnetic particle testing may be applied to raw material, semifinished material (billets, blooms, castings, and forgings), finished material and welds, regardless of heat treatment or lack thereof. It is useful for preventive maintenance testing.

1.1.1 This guide is intended as a reference to aid in the preparation of specifications/standards, procedures and techniques.

1.2 This guide is also a reference that may be used as follows:

1.2.1 To establish a means by which magnetic particle testing, procedures recommended or required by individual organizations, can be reviewed to evaluate their applicability and completeness.

1.2.2 To aid in the organization of the facilities and personnel concerned in magnetic particle testing.

1.2.3 To aid in the preparation of procedures dealing with the examination of materials and parts. This guide describes magnetic particle testing techniques that are recommended for a great variety of sizes and shapes of ferromagnetic materials and widely varying examination requirements. Since there are many acceptable differences in both procedure and technique, the explicit requirements should be covered by a written procedure (see Section 21).

1.3 This guide does not indicate, suggest, or specify acceptance standards for parts/pieces examined by these techniques. It should be pointed out, however, that after indications have been produced, they must be interpreted or classified and then evaluated. For this purpose there should be a separate code, specification, or a specific agreement to define the type, size, location, degree of alignment and spacing, area concentration, and orientation of indications that are unacceptable in a specific part versus those which need not be removed before part acceptance. Conditions where rework or repair is not permitted should be specified.

1.4 This guide describes the use of the following magnetic particle method techniques.

1.4.1 Dry magnetic powder (see 8.4),

1.4.2 Wet magnetic particle (see 8.5),

1.4.3 Magnetic slurry/paint magnetic particle (see 8.5.7), and

1.4.4 Polymer magnetic particle (see 8.5.8).

1.5 *Personnel Qualification*—Personnel performing examinations in accordance with this guide should be qualified and certified in accordance with ASNT Recommended Practice No. SNT-TC-1A, ANSI/ASNT Standard CP-189, NAS 410, or as specified in the contract or purchase order.

1.6 *Nondestructive Testing Agency*—If a nondestructive testing agency as described in Specification E543 is used to perform the examination, the nondestructive testing agency should meet the requirements of Specification E543.

1.7 *Units*—The values stated in inch-pound units are to be regarded as standard. The values given in parentheses are mathematical conversions to SI units that are provided for information only and are not considered standard.

1.8 **Warning—**Mercury has been designated by many regulatory agencies as a hazardous material that can cause serious medical issues. Mercury, or its vapor, has been demonstrated to be hazardous to health and corrosive to materials. Caution should be taken when handling mercury and mercury containing products. See the applicable product Safety Data Sheet (SDS) for additional information. Users should be aware that selling mercury or mercury containing products, or both, into your state or country may be prohibited by law.

1.9 *This standard does not purport to address all of the safety concerns, if any, associated with its use. It is the responsibility of the user of this standard to establish appropriate safety, health, and environmental practices and determine the applicability of regulatory limitations prior to use.*

1.10 *This international standard was developed in accordance with internationally recognized principles on standardization established in the Decision on Principles for the*

[1] This guide is under the jurisdiction of ASTM Committee E07 on Nondestructive Testing and is the direct responsibility of Subcommittee E07.03 on Liquid Penetrant and Magnetic Particle Methods.

Current edition approved June 1, 2021. Published July 2021. Originally approved in 1980. Last previous edition approved in 2015 as E709 – 15. DOI: 10.1520/E0709-21.

[2] For ASME Boiler and Pressure Vessel Code Applications, see related Guide SE-709 in Section II of that Code.

*A Summary of Changes section appears at the end of this standard

Copyright © ASTM International, 100 Barr Harbor Drive, PO Box C700, West Conshohocken, PA 19428-2959. United States

Documents
Document Sharing Hub
Full document details: ASTM E709-21

Development of International Standards, Guides and Recommendations issued by the World Trade Organization Technical Barriers to Trade (TBT) Committee.

2. Referenced Documents

2.1 *ASTM Standards:*[3]

D93 Test Methods for Flash Point by Pensky-Martens Closed Cup Tester

D445 Test Method for Kinematic Viscosity of Transparent and Opaque Liquids (and Calculation of Dynamic Viscosity)

E165/E165M Practice for Liquid Penetrant Testing for General Industry

E543 Specification for Agencies Performing Nondestructive Testing

E1316 Terminology for Nondestructive Examinations

E1444/E1444M Practice for Magnetic Particle Testing

E3024/E3024M Practice for Magnetic Particle Testing for General Industry

2.2 *SAE: Aerospace Materials Specifications:*[4]

AMS 2300 Premium Aircraft Quality Steel Cleanliness Magnetic Particle Inspection Procedure

AMS 2301 Aircraft Quality Steel Cleanliness Magnetic Particle Inspection Procedure

AMS 2303 Aircraft Quality Steel Cleanliness Martensitic Corrosion Resistant Steels Magnetic Particle Inspection Procedure

AMS 2641 Vehicle Magnetic Particle Inspection

AMS 3040 Magnetic Particles, Non-fluorescent, Dry Method

AMS 3041 Magnetic Particles, Non-fluorescent, Wet Method, Oil Vehicle, Ready to Use

AMS 3042 Magnetic Particles, Non-fluorescent, Wet Method, Dry Powder

AMS 3043 Magnetic Particles, Non-fluorescent, Oil Vehicle, Aerosol Packaged

AMS 3044 Magnetic Particles, Fluorescent, Wet Method, Dry Powder

AMS 3045 Magnetic Particles, Non-fluorescent, Wet Method, Oil Vehicle, Ready to Use

AMS 3046 Magnetic Particles, Non-fluorescent, Wet Method, Oil Vehicle, Aerosol Packaged

AMS 5062 Steel, Low Carbon Bars, Forgings, Tubing, Sheet, Strip, and Plate 0.25 Carbon, Maximum

AMS 5355 Investment Castings

AMS-I-83387 Inspection Process, Magnetic Rubber

AS 4792 Water Conditioning Agents for Aqueous Magnetic Particle Inspection

AS 5282 Tool Steel Ring Standard for Magnetic Particle Inspection

AS 5371 Reference Standards Notched Shims for Magnetic Particle Inspection

2.3 *ASNT Documents:*[5]

SNT-TC-1A Personnel Qualification and Certification in Nondestructive Testing

CP-189 ASNT Qualification and Certification of Nondestructive Testing Personnel

2.4 *Federal Standards:*[6]

A-A-59230 Fluid, Magnetic Particle Inspection, Suspension

FED-STD-313 Material Safety Data Sheets Preparation and the Submission of

2.5 *OSHA Document:*[7]

29 CFR 1910.1200 Hazard Communication

2.6 *AIA Documents:*[8]

NAS 410 Nondestructive Testing Personnel Qualification and Certification

2.7 *ISO Standard:*[9]

ISO 7810 Identification Cards—Physical Characteristics

3. Terminology

3.1 For definitions of terms used in the practice, refer to Terminology E1316.

4. Summary of Guide

4.1 *Principle*—The magnetic particle method is based on establishing a magnetic field with high flux density in a ferromagnetic material. The flux lines must spread out when they pass through non-ferromagnetic material such as air in a discontinuity or an inclusion. Because flux lines can not cross, this spreading action may force some of the flux lines out of the material (flux leakage). Flux leakage is also caused by reduction in ferromagnetic material (cross-sectional change), a sharp dimensional change, or the end of the part. If the flux leakage is strong enough, fine magnetic particles will be held in place and an accumulation of particles will be visible under the proper lighting conditions. While there are variations in the magnetic particle method, they all are dependent on this principle, that magnetic particles will be retained at the locations of magnetic flux leakage. The amount of flux leakage at discontinuities depends primarily on the following factors: flux density in the material, and size, orientation, and proximity to the surface of a discontinuity. With longitudinal fields, all of the flux lines must complete their loops though air and an excessively strong magnetic field may interfere with examination near the flux entry and exit points due to the high flux-density present at these points.

[3] For referenced ASTM standards, visit the ASTM website, www.astm.org, or contact ASTM Customer Service at service@astm.org. For *Annual Book of ASTM Standards* volume information, refer to the standard's Document Summary page on the ASTM website.

[4] Available from Society of Automotive Engineers (SAE), 400 Commonwealth Dr., Warrendale, PA 15096-0001, http://www.sae.org.

[5] Available from American Society for Nondestructive Testing (ASNT), P.O. Box 28518, 1711 Arlingate Ln., Columbus, OH 43228-0518, http://www.asnt.org.

[6] Available from Standardization Documents Order Desk, DODSSP, Bldg. 4, Section D, 700 Robbins Ave., Philadelphia, PA 19111-5098, http://www.dodssp.daps.mil.

[7] Available from Occupational Safety and Health Administration (OSHA), 200 Constitution Ave., NW, Washington, DC 20210, http://www.osha.gov.

[8] Available from Aerospace Industries Association of America, Inc. (AIA), 1000 Wilson Blvd., Suite 1700, Arlington, VA 22209-3928, http://www.aia-aerospace.org.

[9] Available from International Organization for Standardization (ISO), ISO Central Secretariat, Chemin de Blandonnet 8, CP 401, 1214 Vernier, Geneva, Switzerland, https://www.iso.org.

AVA Documents
Document Sharing Hub

Full document details: ASTM E709-21

4.2 *Method*—While this practice permits and describes many variables in equipment, materials, and procedures, there are three steps essential to the method:

4.2.1 The part must be magnetized.

4.2.2 Magnetic particles of the type designated in the contract/purchase order/specification should be applied while the part is magnetized or immediately thereafter.

4.2.3 Any accumulation of magnetic particles must be observed, interpreted, and evaluated.

4.3 *Magnetization:*

4.3.1 *Ways to Magnetize*—A ferromagnetic material can be magnetized either by passing an electric current through the material or by placing the material within a magnetic field originated by an external source. The entire mass or a portion of the mass can be magnetized as dictated by size and equipment capacity or need. As previously noted, in order to be detectable, the discontinuity must interrupt the normal path of the magnetic field lines. If a discontinuity is open to the surface, the flux leakage attracting the particles will be at the maximum value for that particular discontinuity. When that same discontinuity is below the surface, flux leakage evident on the surface will be a lesser value.

4.3.2 *Field Direction*—If a discontinuity is oriented parallel to the magnetic field lines, it may be essentially undetectable. Therefore, since discontinuities may occur in any orientation, it may be necessary to magnetize the part or the area of interest twice or more sequentially in different directions by the same method or a combination of different methods (see Section 13) to induce magnetic field lines in a suitable direction in which to perform an adequate examination.

4.3.3 *Field Strength*—The magnetic field must be of sufficient strength to indicate those discontinuities which are unacceptable, yet must not be so strong that an excess of local particle accumulation masks relevant indications (see Section 14).

4.4 *Types of Magnetic Particles and Their Use*—There are various types of magnetic particles available for use in magnetic particle testing. They are available as dry powders (fluorescent and nonfluorescent) ready for use as supplied (see 8.4), powder concentrates (fluorescent and nonfluorescent) for dispersion in water or suspending in light petroleum distillates (see 8.5), magnetic slurries/paints (see 8.5.7), and magnetic polymer dispersions (see 8.5.8).

4.5 *Evaluation of Indications*—When the material to be examined has been properly magnetized, the magnetic particles have been properly applied, and the excess particles properly removed, there will be accumulations of magnetic particles remaining at the points of flux leakage. These accumulations show the distortion of the magnetic field and are called indications. Without disturbing the particles, the indications must be examined, classified, compared with the acceptance standards, and a decision made concerning the disposition of the material that contains the indication.

4.6 *Typical Magnetic Particle Indications:*

4.6.1 *Surface Discontinuities*—Surface discontinuities, with few exceptions, produce sharp, distinct patterns (see Annex A1).

4.6.2 *Near-surface Discontinuities*—Near-surface discontinuities produce less distinct indications than those open to the surface. The patterns tend to be broad, rather than sharp, and the particles are less tightly held (see Annex A1).

5. Significance and Use

5.1 The magnetic particle method of nondestructive testing indicates the presence of surface and near-surface discontinuities in materials that can be magnetized (ferromagnetic). This method can be used for production examination of parts/components or structures and for field applications where portability of equipment and accessibility to the area to be examined are factors. The ability of the method to find small discontinuities can be enhanced by using fluorescent particles suspended in a suitable vehicle and by introducing a magnetic field of the proper strength whose orientation is as close as possible to 90° to the direction of the suspected discontinuity (see 4.3.2). A smoother surface or a pulsed current improves mobility of the magnetic particles under the influence of the magnetic field to collect on the surface where magnetic flux leakage occurs.

6. Equipment

6.1 *Types*—There are a number of types of equipment available for magnetizing ferromagnetic parts and components.

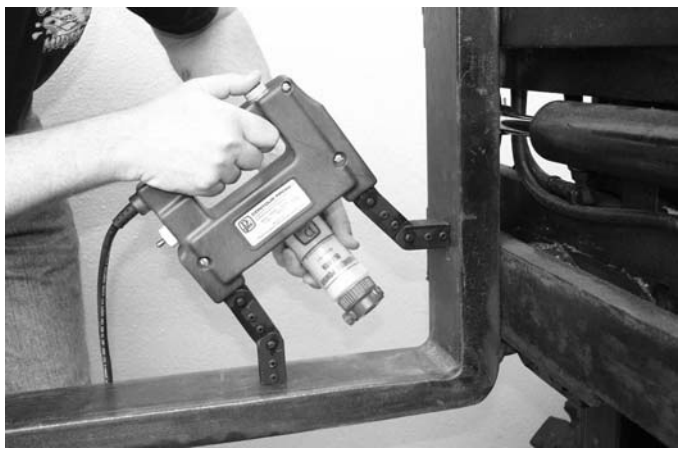

FIG. 1 (a) Articulating Yoke Method of Part Magnetization

Documents
Document Sharing Hub

Full document details: ASTM E709-21

With the exception of a permanent magnet, all equipment requires a power source capable of delivering the required current levels to produce the magnetic field. The current used dictates the sizes of cables and the capability of relays, switching contacts, meters and rectifier if the power source is alternating current.

6.2 *Portability*—Portability, which includes the ability to hand carry the equipment, can be obtained from yokes, portable coils with power supplies, and capacitor discharge power supplies with cables. Generally, portable coils provide high magnetizing forces by using higher numbers of turns to compensate for their lower current flow. Capacitor discharge units use high current storage capacity and provide these high current levels for only a very short duration.

6.3 *Yokes*—Yokes are usually C-shaped electromagnets which induce a magnetic field between the poles (legs) and are used for local magnetization (Fig. 1(a)). Many portable yokes have articulated legs (poles) that allow the legs to be adjusted to contact irregular surfaces or two surfaces that join at an angle.

6.3.1 *Permanent Magnets*—Permanent magnets (Fig. 1(b)) are available but their use may be restricted for many applications. This restriction may be due to application impracticality, or due to the specifications governing the examination. Permanent magnets can lose their magnetic field generating capacity by being partially demagnetized by a stronger flux field, being damaged, or dropped. In addition, the particle mobility created by AC current or HW current pulsations produced by electromagnetic yokes are not present. Particles, steel filings, chips, and scale clinging to the poles can create a housekeeping problem.

6.4 *Prods*—Prods are used for local magnetizations, see Fig. 2. The prod tips that contact the piece should be aluminum, copper braid, or copper pads rather than solid copper. With solid copper tips, accidental arcing during prod placement or removal can cause copper penetration into the surface which may result in metallurgical damage (softening, hardening, cracking, etc.). Open-circuit voltages should not exceed 25 V.

FIG. 1 (b) Permanent Magnet Yoke Method of Part Magnetization *(continued)*

6.4.1 *Remote Control Switch*—A remote-control switch, which may be built into the prod handles, should be provided to permit the current to be turned on after the prods have been properly placed and to turn it off before the prods are removed in order to prevent arcing (arc burns).

6.5 *Bench Unit*—A typical bench type unit is shown in Fig. 3. The unit normally is furnished with a head/tailstock combination along with a fixed coil (see Fig. 4).

6.6 *UV-A Lamps,* which are portable, hand-held, permanently mounted or fixed, and used to examine parts, should be checked for output at the verification intervals specified in Table 2 and after bulb or filter replacement. A longer period may be used if a plan justifying this extension is prepared by the NDT facility or its delegate. Minimum acceptable intensity is 1000 μW/cm^2 at the examination surface.

NOTE 1—When using a mercury vapor style lamp, a change in line voltage greater than ±10 % can cause a change in output and consequential loss of inspection performance. A constant voltage transformer may be used where there is evidence of voltage changes greater than 10 %.

6.6.1 UV-A lamps that use a UV-A LED source shall produce a peak wavelength at 360 to 370 nanometers as measured with a spectroradiaometer. When requested, the manufacturer shall provide a certification thereof.

6.6.2 Battery-powered UV-A lamps used to examine parts shall have their intensity measured prior to use and after each use.

6.7 *Equipment Verification*—See Section 20.

7. Examination Area

7.1 *UV-A Intensity for Examination*—Magnetic indications found using nonfluorescent particles are examined under visible light. Indications found using fluorescent particles must be examined under UV-A irradiance. This requires a darkened area with accompanying control of the visible light intensity.

7.1.1 *Visible Light Intensity*—The intensity of the visible light at the surface of the part/work piece undergoing nonfluorescent particle examination is recommended to be a minimum of 100 foot candles (1076 lux).

7.1.1.1 *Field Examinations—For some field examinations* using nonfluorescent particles, visible light intensities as low as 50 foot candles (538 lux) may be used when agreed on by the contracting agency.

7.1.1.2 *Ambient Visible Light*—The intensity of ambient visible light in the darkened area where fluorescent magnetic particle testing is performed is recommended to not exceed 2 foot candles (21.5 lux).

7.1.2 *UV-A Irradiance:*

7.1.2.1 *UV-A Intensity*—The UV-A irradiance at the examination surface is recommended to not be less than 1000 μW/cm^2 when measured with a suitable UV-A radiometer.

7.1.2.2 *UV-A Lamp Warm-up*—When using a mercury vapor bulb, allow the UV-A lamp to warm up for a minimum of five minutes prior to its use or measurement of the intensity of the ultraviolet light UV-A emitted. When using LED UV-A lamps,

AVA Documents
Document Sharing Hub

Full document details: ASTM E709-21

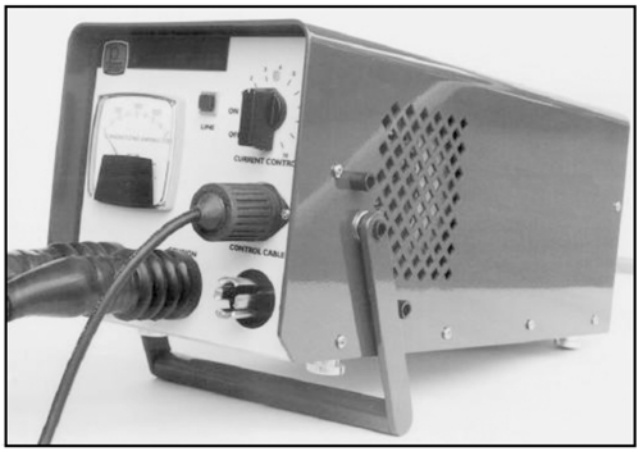

Typical portable power pack for prods

Typical Single Prod Set

Typical Double Prod Set

FIG. 2 Prods

FIG. 3 Bench Unit

it is recommended to allow the lamp to stabilize in accordance with the manufacturer's recommendations prior to use or measurement.

7.1.3 *Dark Area Eye Adaptation*—The generally accepted practice is that an inspector be in the darkened area at least one (1) minute so that his or her eyes will adapt to dark viewing prior to examining parts under UV irradiance. (**Warning—** Photochromic or permanently tinted lenses should not be worn during examination.)

7.2 *Housekeeping*—The examination area should be kept free of interfering debris. If fluorescent materials are involved, the area should also be kept free of fluorescent objects not related to the part/piece being examined.

8. Magnetic Particle Materials

8.1 *Magnetic Particle Properties:*

8.1.1 *Dry Particle Properties*—AMS 3040 describes the generally accepted properties of dry method particles.

8.1.2 *Wet Particle Properties*—The following documents describe the generally accepted properties of wet method particles in their various forms:

AMS 3041 Magnetic Particles, Non-fluorescent, Wet Method, Oil Vehicle, Ready to Use

AMS 3042 Magnetic Particles, Non-fluorescent, Wet Method, Dry Powder

AMS 3043 Magnetic Particles, Non-fluorescent, Oil Vehicle, Aerosol Packaged

AMS 3044 Magnetic Particles, Fluorescent, Wet Method, Dry Powder

AVA Documents
Document Sharing Hub

Full document details: ASTM E709-21

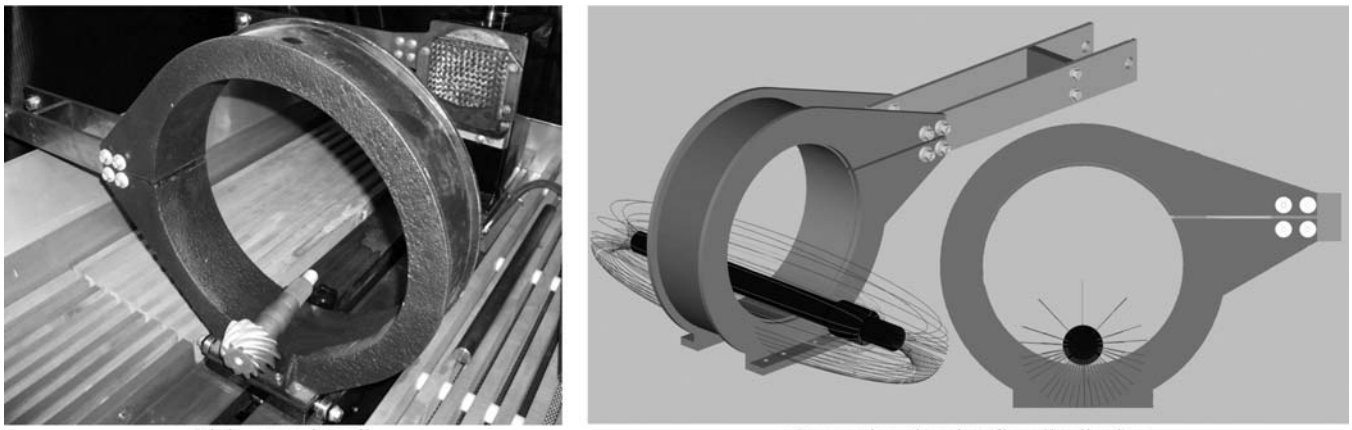

Pinion gear in coil

Conception showing flux distribution with part in the bottom of the coil

FIG. 4 Bench Fixed Coil and Field Distribution

AMS 3045 Magnetic Particles, Non-fluorescent, Wet Method, Oil Vehicle, Ready to Use

AMS 3046 Magnetic Particles, Non-fluorescent, Wet Method, Oil Vehicle, Aerosol Packaged

8.1.3 *Suspension Vehicle*—The suspension vehicle for wet-method examination may be either a light oil distillate fluid (refer to AMS 2641 or A-A-52930) or a conditioned water vehicle (refer to AS 4792).

8.2 *Particle Types*—The particles used in either dry or wet magnetic particle testing techniques are basically finely divided ferromagnetic materials which have been treated to impart color (fluorescent and nonfluorescent) in order to make them highly visible (contrasting) against the background of the surface being examined. The particles are designed for use either as a free flowing dry powder or for suspension at a given concentration in a suitable liquid medium.

8.3 *Particle Characteristics*—The magnetic particles must have high permeability to allow ease of magnetizing and attraction to the site of the flux leakage and low retentivity so they will not be attracted (magnetic agglomeration) to each other. Control of particle size and shape is required to obtain consistent results. The particles should be nontoxic, free from rust, grease, paint, dirt, and other deleterious materials that might interfere with their use; see 20.5 and 20.6. Both dry and wet particles are considered safe when used in accordance with the manufacturer's instructions. They generally afford a very low hazard potential with regard to flammability and toxicity.

8.4 *Dry Particles*—Dry magnetic powders are designed to be used as supplied and are applied by spraying or dusting directly onto the surface of the part being examined. They are generally used on an expendable basis because of the requirement to maintain particle size and control possible contamination. Reuse is not a normal practice. Dry powders may also be used under extreme environmental conditions. They are not affected by cold; therefore examination can be carried out at temperatures that would thicken or freeze wet baths. They are also heat resistant; some powders may be usable at temperatures up to 600 °F (315 °C). Some colored, organic coatings applied to dry particles to improve contrast lose their color at temperatures this high, making the contrast less effective. Fluorescent dry particles cannot be used at this high a temperature; the manufacturer should be contacted for the temperature limitations (see 15.1.2).

8.4.1 *Advantages*—The dry magnetic particle technique is generally superior to the wet technique for detection of near-surface discontinuities on parts with a gross indication size. Refer to 8.5.1: (a) for large objects when using portable equipment for local magnetization; (b) superior particle mobility is obtained for relatively deep-seated flaws using half-wave rectified current as the magnetizing source; (c) ease of removal.

8.4.2 *Disadvantages*—The dry magnetic particle technique; (a) cannot be used in confined areas without proper safety breathing apparatus; (b) can be difficult to use in overhead magnetizing positions; (c) does not always leave evidence of complete coverage of part surface as with the wet technique; (d) is likely to have lower production rates than the wet technique; and (e) is difficult to adapt to any type of automatic system.

8.4.3 *Nonfluorescent Colors*—Although dry magnetic particle powder can be almost any color, the most frequently employed colors are light gray, black, red, or yellow. The choice is generally based on maximum contrast with the surface to be examined. The examination is done under visible light.

8.4.4 *Fluorescent*—Fluorescent dry magnetic particles are also available, but are not in general use primarily because of their higher cost and use limitations. They require a UV-A source and a darkened work area. These requirements are not often available in the field-type locations where dry magnetic particle examinations are especially suitable.

8.4.5 *Dual Response*—Dual response particles are available that are readily detectable in visible light and also display fluorescence when viewed under UV-A or a combination visible and UV-A. Use in accordance with the manufacturer's recommendations.

8.5 *Wet Particle Systems*—Wet magnetic particles are designed to be suspended in a vehicle such as water or light

AVA Documents
Document Sharing Hub

Full document details: ASTM E709-21

petroleum distillate at a given concentration for application to the examination surface by flowing, spraying, or pouring. They are available in both fluorescent and nonfluorescent concentrates. In some cases the particles are premixed with the suspending vehicle by the supplier, but usually the particles are supplied as a dry concentrate or paste concentrate which is mixed with the distillate or water by the user. The suspensions are normally used in wet horizontal magnetic particle equipment in which the suspension is retained in a reservoir and recirculated for continuous use. The suspension may also be used on an expendable basis dispensed from an aerosol or other suitable dispensers.

8.5.1 *Primary Use*—Because the particles used are smaller, wet method techniques are generally used to locate smaller discontinuities than the dry method is used for. The liquid vehicles used may not perform satisfactorily when their viscosity exceeds 5cSt (5 mm^2/s) at the operating temperature. If the suspension vehicle is a hydrocarbon, its flash point limits the top temperature of usage. Mixing equipment for bulk reservoirs or manual agitation for portable dispensers is usually required to keep wet method particles uniformly in suspension.

8.5.2 *Where Used*—The wet fluorescent method usually is performed indoors or in areas where shelter and ambient light level can be controlled and where proper application equipment is available.

8.5.3 *Color*—The color chosen for any given examination should be one that best contrasts with the test surface. Because contrast is invariably higher with fluorescent materials, these are utilized in most wet process examinations. Fluorescent wet method particles normally glow a bright yellow-green when viewed under UV-A irradiance, although other colors are available. Non-fluorescent particles are usually black or reddish brown, although other colors are available. Dual response particles are available that are readily detectable in visible light and also display fluorescence when viewed under UV-A or a combination visible illumination and UV-A irradiance. Refer to 8.5.5.

8.5.4 *Suspension Vehicles*—Generally the particles are suspended in a light petroleum (low-viscosity) distillate or conditioned water. (If sulfur or chlorine limits are specified, use Test Methods E165/E165M, Annex A2 or A4 to determine their values.

8.5.4.1 *Petroleum Distillates*—Low-viscosity light petroleum distillates vehicles (AMS 2641 Type 1 or equal) are ideal for suspending both fluorescent and nonfluorescent magnetic particles and are commonly employed.

(1) Advantages—Two significant advantages for the use of petroleum distillate vehicles are: (a) the magnetic particles are suspended and dispersed in petroleum distillate vehicles without the use of conditioning agents; and (b) the petroleum distillate vehicles provide a measure of corrosion protection to parts and the equipment used.

(2) Disadvantages—Principal disadvantages are flammability, fumes, and availability. It is essential, therefore, to select and maintain readily available sources of supply of petroleum distillate vehicles that have as high a flash point as practicable to avoid possible flammability problems and provide a work area with proper ventilation.

(3) Characteristics—Petroleum distillate vehicles to be used in wet magnetic particle testing should possess the following: (*a*) viscosity should not exceed 3.0 cSt (3 mm^2/s) at 100 °F (38 °C) and not more than 5.0 cSt (5 mm^2/s) at the lowest temperature at which the vehicle will be used; when verified in accordance with Test Method D445, in order not to impede particle mobility (see 20.7.3), (*b*) minimum flash point, when verified in accordance with Test Methods D93, should be 200 °F (93 °C) in order to minimize fire hazards (see 20.7.4), (*c*) odorless; not objectionable to user, (*d*) low inherent fluorescence if used with fluorescent particles; that is, it should not interfere significantly with the fluorescent particle indications (see 20.6.4.1), and (*e*) nonreactive; should not degrade suspended particles.

8.5.4.2 *Water Vehicles with Conditioning Agents*—Water may be used as a suspension vehicle for wet magnetic particles provided suitable conditioning agents are added which provide proper wet dispersing, in addition to corrosion protection for the parts being examined and the equipment in use. Plain water does not disperse some types of magnetic particles, does not wet all surfaces, and is corrosive to parts and equipment. On the other hand, conditioned water suspensions of magnetic particles are safer to use since they are nonflammable. The selection and concentration of the conditioning agent should be as recommended by the particle manufacturer. The following are recommended properties for water vehicles containing conditioning agents for use with wet magnetic particle testing:

(1) Wetting Characteristics—The vehicle should have good wetting characteristics; that is, wet the surface to be examined, give even, complete coverage without evidence of dewetting the examination surface. The surface tension (coverage) should be observed independently under both UV-A irradiance and visible light. Smooth examination surfaces require that a greater percentage of wetting agent be added than is required for rough surface. Nonionic wetting agents are recommended (see 20.7.5).

(2) Suspension Characteristics—Impart good dispersibility; that is, thoroughly disperse the magnetic particles without evidence of particle agglomeration.

(3) Foaming—Minimize foaming; that is, it should not produce excessive foam which would interfere with indication formation or cause particles to form scum with the foam.

(4) Corrosiveness—It should not corrode parts to be examined or the equipment in which it is used.

(5) Viscosity Limit—The viscosity of the conditioned water should not exceed a maximum viscosity of 3 cSt (3 mm^2/s) at 100 °F (38 °C) (see 20.7.3).

(6) Fluorescence—The conditioned water should not produce excessive fluorescence if intended for use with fluorescent particles.

(7) Nonreactiveness—The conditioned water should not cause deterioration of the suspended magnetic particles.

(8) Water pH—The pH of the conditioned water should not be less than 7.0 or exceed 10.5.

(9) Odor—The conditioned water should be essentially odorless.

AVA Documents
Document Sharing Hub

Full document details: ASTM E709-21

8.5.5 *Concentration of Wet Magnetic Particle Suspension*—The initial bath concentration of suspended magnetic particles should be as specified or as recommended by the manufacturer and should be checked by settling volume measurements and maintained at the specified concentration on a daily basis. If the concentration is not maintained properly, examination results can vary greatly. The concentration of dual response particles in the wet-method bath suspension may be adjusted to best perform in the desired lighting environment. Higher particle concentration is recommended for visible light areas and lower particle concentration is recommended for UV-A areas. Use in accordance with the particle manufacturer's recommendations.

8.5.6 *Application of Wet Magnetic Particles* (see 15.2).

8.5.7 *Magnetic Slurry/Paint Systems*—Another type of examination vehicle is the magnetic slurry/paint type consisting of a heavy oil in which flake-like particles are suspended. The material is normally applied by brush before the part is magnetized. Because of the high viscosity, the material does not rapidly run off surfaces, facilitating the examination of vertical or overhead surfaces. The vehicles may be combustible, but the fire hazard is very low. Other hazards are very similar to those of the oil and water vehicles previously described.

8.5.8 *Polymer-Based Systems*—The vehicle used in the magnetic polymer is basically a liquid polymer which disperses the magnetic particles and which cures to an elastic solid in a given period of time, forming fixed indications. Viscosity limits of standard wet technique vehicles do not apply. Care should be exercised in handling these polymer materials. Use in accordance with manufacturer's instructions and precautions. This technique is particularly applicable to examination areas of limited visual accessibility, such as bolt holes.

9. Part Preparation

9.1 *General*—The surface of the ferromagnetic part to be examined should be essentially clean, dry, and free of contaminants such as dirt, oil, grease, loose rust, loose mill sand, loose mill scale, lint, thick paint, welding flux/slag, and weld splatter that might restrict particle movement. See 15.1.2 about applying dry particles to a damp/wet surface. When examining a local area, such as a weld, the areas adjacent to the surface to be examined, as agreed by the contracting parties, must also be cleaned to the extent necessary to permit detection of indications. See Appendix X6 for more information on steels.

9.1.1 *Nonconductive Coatings*—Thin nonconductive coatings, such as paint in the order of 1 or 2 mil (0.02 to 0.05 mm) will not normally interfere with the formation of indications, but they must be removed at all points where electrical contact is to be made for direct magnetization. Indirect magnetization does not require electrical contact with the part/piece. See Section 12.2. If a nonconducting coating/plating is left on the area to be examined that has a thickness greater than 2 mil (0.05 mm), it must be demonstrated that unacceptable discontinuities can be detected through the maximum thickness applied.

9.1.2 *Conductive Coatings*—A conductive coating (such as chrome plating and heavy mill scale on wrought products resulting from hot forming operations) can mask discontinuities. As with nonconductive coatings, it must be demonstrated that the unacceptable discontinuities can be detected through the coating.

9.1.3 *Residual Magnetic Fields*—If the part/piece holds a residual magnetic field from a previous magnetization that will interfere with the examination, the part must be demagnetized. See Section 18.

9.2 *Cleaning Examination Surface*—Cleaning of the examination surface may be accomplished by detergents, organic solvents, or mechanical means. As-welded, as-rolled, as-cast, or as-forged surfaces are generally satisfactory, but if the surface is unusually nonuniform, as with burned-in sand, a very rough weld deposit, or scale, interpretation may be difficult because of mechanical entrapment of the magnetic particles. In case of doubt, any questionable area should be recleaned and reexamined (see 9.1).

9.2.1 *Plugging and Masking Small Holes and Openings*—Unless prohibited by the purchaser, small openings and oil holes leading to obscure passages or cavities can be plugged or masked with a suitable nonabrasive material which is readily removed. In the case of engine parts, the material must be soluble in oil. Effective masking must be used to protect components that may be damaged by contact with the particles or particle suspension.

10. Sequence of Operations

10.1 *Sequencing Particle Application and Establishing Magnetic Flux Field*—The sequence of operation in magnetic particle examination applies to the relationship between the timing and application of particles and establishing the magnetizing flux field. Two basic techniques apply, that is, continuous (see 10.1.1 and 10.1.2) and residual (see 10.1.3), both of which are commonly employed in industry.

10.1.1 *Continuous Magnetization*—Continuous magnetization is employed for most applications utilizing either dry or wet particles and will provide higher magnetic field strengths, to aid indication formation better, than residual magentic fields. The continuous method must be used when performing multidirectional magnetization. The sequence of operation for the dry and the wet continuous magnetization techniques are significantly different and are discussed separately in 10.1.1.1 and 10.1.1.2.

10.1.1.1 *Dry Continuous Magnetization Technique*—Unlike a wet suspension, dry particles lose most of their mobility when they contact the surface of a part. Therefore, it is imperative that the part/area of interest be under the influence of the applied magnetic field while the particles are still airborne and free to be attracted to leakage fields. This dictates that the flow of magnetizing current be initiated prior to the application of dry magnetic particles and terminated after the application of powder has been completed and any excess has been blown off. Magnetizing with HW current and AC current provide additional particle mobility on the surface of the part. Examination with dry particles is usually carried out in conjunction with prod-type or yoke localized magnetizations, and buildup of indications is observed as the particles are being applied.

AVA Documents
Document Sharing Hub

Full document details: ASTM E709-21

10.1.1.2 *Wet Continuous Magnetization Technique*—The wet continuous magnetization technique involves bathing the part with the examination medium to provide an abundant source of suspended particles on the surface of the part and terminating the bath application immediately prior to the termination of the magnetizing current. The duration of the magnetizing current is typically on the order of 0.5 second for each magnetizing pulse (shot), with two or more shots given to the part. To ensure that indications are not washed away, the subsequent shots should follow the first while the particles are still mobile on the surface of the part.

10.1.1.3 *Polymer or Slurry Continuous Magnetization Technique*—Prolonged or repeated periods of magnetization are often necessary for polymer- or slurry-base suspensions because of slower inherent magnetic particle mobility in the high-viscosity suspension vehicles.

10.1.2 *True Continuous Magnetization Technique*—In this technique, the magnetizing current is sustained throughout both the processing and examination of the part.

10.1.3 *Residual Magnetization Techniques:*

10.1.3.1 *Residual Magnetization*—In this technique, the examination medium is applied after the magnetizing force has been discontinued. It can be used only if the material being examined has relatively high retentivity so the residual leakage field will be of sufficient strength to attract and hold the particles and produce indications. This technique may be advantageous for integration with production or handling requirements or when higher than residual field strengths are not required to achieve satisfactory results. When inducing circular fields and longitudinal fields of long pieces, residual fields are normally sufficient to meet magnetizing requirements consistent with the requirements of Section 14. The residual method has found wide use examining pipe and tubular goods. For magnetization requirements of oilfield tubulars, refer to Appendix X8. Unless demonstrations with typical parts indicate that the residual field has sufficient strength to produce relevant indications of discontinuities (see 20.8) when the field is in proper orientation, the continuous method should be used.

11. Types of Magnetizing Currents

11.1 *Basic Current Types*—The four basic types of current used in magnetic particle testing to establish part magnetization are alternating current (AC), half-wave rectified current (HW), full-wave rectified current (FW), and for a special application, DC.

11.1.1 *Alternating Current (AC)*—Part magnetization with alternating current is preferred for those applications where examination requirements call for the detection of discontinuities, such as fatigue cracks, that are open to the surface to which the magnetizing force is applied. Associated with AC is a "skin effect" that confines the magnetic field at or near to the surface of a part. In contrast, both HW current and FW current produce a magnetic field having penetrating capabilities proportional to the amount of applied current, which should be used when near-surface or inside surface discontinuities are of concern.

11.1.2 *Half-Wave Rectified Current (HW)*—Half-wave current is frequently used in conjunction with wet and dry particles because the current pulses provide more mobility to the particles. This waveform is used with prods, yokes, mobile and bench units. Half-wave rectified current is used to achieve depth of penetration for detection of typical discontinuities found in weldments, forgings, and ferrous castings. As with AC for magnetization, single-phase current is utilized and the average value measured as "magnetizing current."

11.1.3 *Full-Wave Rectified Current (FW)*—Full-wave current may utilize single- or three-phase current. Three-phase current has the advantage of lower line amperage draws, whereas single-phase equipment is less expensive. Full-wave rectified current is commonly used when the residual method is to be employed. Because particle movement, either dry or wet is noticeably less, precautions must be taken to ensure that sufficient time is allowed for formation of indications.

11.1.4 *Direct Current (DC)*—A bank of batteries, full-wave rectified AC filtered through capacitors or a DC generator produce direct magnetizing current. They have largely given way to half-wave rectified or full-wave rectified DC except for a few specialized applications, primarily because of broad application advantages when using other types of equipment.

11.1.5 *Capacitor Discharge (CD) Current*—A bank of capacitors are used to store energy and when triggered the energy reaches high amperage with a very short duration (normally less than 25 milliseconds). Because of the short pulse duration the current requirements are affected by the amount of material to be magnetized as well as the applied amperage. The capacitor discharge technique is widely used to establish a residual magnetic field in tubing, casing, line pipe, and drill pipe. For specific requirements, see Appendix X8.

12. Part Magnetization Techniques

12.1 *Examination Coverage*—All examinations should be conducted with sufficient area overlap to assure the required coverage at the specified sensitivity has been obtained.

12.2 *Direct and Indirect Magnetization*—A part can be magnetized either directly or indirectly. For direct magnetization the magnetizing current is passed directly through the part creating a magnetic field oriented 90 degrees to current flow in the part. With indirect magnetization techniques a magnetic field is induced in the part, which can create a circular/toroidal, longitudinal, or multidirectional magnetic field in the part. The techniques described in 20.8 for verifying that the magnetic fields have the anticipated direction and strength should be employed. This is especially important when using multidirectional techniques to examine complex shapes.

12.3 *Choosing Magnetization Technique*—The choice of direct or indirect magnetization will depend on such factors as size, configuration, or ease of processing. Table 1 compares the advantages and limitations of the various methods of part magnetization.

AVA Documents
Document Sharing Hub

Full document details: ASTM E709-21

TABLE 1 Advantages and Limitations of the Various Ways of Magnetizing a Part

Magnetizing Technique and Material Form	Advantages	Limitations
I. Direct Contact Part Magnetization (see 12.3.1)		
Head/Tailstock Contact		
Solid, relatively small parts (castings, forgings, machined pieces) that can be processed on a horizontal wet unit	1. Fast, easy technique.	1. Possibility of arc burns if poor contact conditions exist.
	2. Circular magnetic field surrounds current path.	2. Long parts should be examined in sections to facilitate bath application without resorting to an overly long current shot.
	3. Good sensitivity to surface and near-surface discontinuities.	
	4. Simple as well as relatively complex parts can usually be easily processed with one or more shots.	
	5. Complete magnetic path is conducive to maximizing residual characteristics of material.	
Large castings and forgings	1. Large surface areas can be processed and examined in relatively short time.	1. High amperage requirements (16 000 to 20 000 A) dictate costly DC power supply.
Cylindrical parts such as tubing, pipe, hollow shafts, etc.	1. Entire length can be circularly magnetized by contacting, end to end.	1. Effective field limited to outside surface and cannot be used for inside diameter examination.
		2. Ends must be conductive to electrical contacts and capable of carrying required current without excessive heat. Cannot be used on oilfield tubulars because of possibility of arc burns.
Long solid parts such as billets, bars, shafts, etc.	1. Entire length can be circularly magnetized by contacting, end to end.	1. Output voltage requirements increase as the part length increases, due to greater value of the impedance or resistance as the cables and part length grows, or both.
	2. Current requirements are independent of length.	2. Ends must be conductive to electrical contact and capable of carrying required current without excessive heat.
	3. No end loss.	
Prods: Welds	1. Circular field can be selectively directed to weld area by prod placement.	1. Only small area can be examined at one time.
	2. In conjunction with half-wave rectified alternating current and dry powder, provides excellent sensitivity to subsurface discontinuities as well as surface type.	2. Arc burns due to poor contact.
	3. Flexible, in that prods, cables, and power packs can be brought to examination site.	3. Surface must be dry when dry powder is being used.
		4. Prod spacing must be in accordance with the magnetizing current level.
Large castings or forgings	1. Entire surface area can be examined in small increments using nominal current values.	1. Coverage of large surface area require a multiplicity of shots that can be very time-consuming.
	2. Circular field can be concentrated in specific areas that historically are prone to discontinuities.	2. Possibility of arc burns due to poor contact. Surface should be dry when dry powder is being used.
	3. Equipment can be brought to the location of parts that are difficult to move.	3. Large power packs (over 6000A) often require a large capacity voltage source to operate.
	4. In conjunction with half-wave rectified alternating current and dry powder, provides excellent sensitivity to near surface subsurface type discontinuities that are difficult to locate by other methods.	4. When using HW current or FW current on retentive materials, it is often necessary that the power pack be equipped with a reversing DC demagnetizing option.
II. Indirect Part Magnetization (see 12.3.3)		
Internal Conductor		
Miscellaneous parts having holes through which a conductor can be placed such as: Bearing race Hollow cylinder Gear Large nut	1. When used properly, no electrical contact is made with the part and possibility of arc burns eliminated.	1. Size of conductor must be ample to carry required current.
	2. Circumferentially directed magnetic field is generated in all surfaces, surrounding the conductor (inside diameter, faces, etc.).	2. Larger diameters require repeated magnetization with conductor against inside diameter and rotation of part between processes. Where continuous magnetization technique is being employed, examination is required after each magnetization step.
	3. Ideal for those cases where the residual method is applicable.	
	4. Light weight parts can be supported by the internal conductor.	
	5. Smaller internal conductor and multiple coil wraps may be used to reduce current requirements.	
Large clevis Pipe coupling, casing/tubing		

Documents
Document Sharing Hub

Full document details: ASTM E709-21

TABLE 1 *Continued*

Magnetizing Technique and Material Form	Advantages	Limitations
Tubular type parts such as: Pipe/Casting Tubing Hollow shaft	1. When used properly, no electrical contact is made with the part and possibility of arc burns eliminated. 2. Inside diameter as well as outside diameter examination. 3. Entire length of part circularly magnetized.	1. Outside surface sensitivity may be somewhat less than that obtained on the inside surface for large diameter and extremely heavy wall sections.
Large valve bodies and similar parts	1. Provides good sensitivity for detection of discontinuities located on internal surfaces.	1. Outside surface sensitivity may be somewhat less than that obtained on the inside diameter for heavy wall sections.
Coil/Cable Wrap Miscellaneous medium-sized parts where the length predominates such as a crankshaft	1. All generally longitudinal surfaces are longitudinally magnetized to effectively locate transverse discontinuities.	1. Length may dictate multiple shot as coil is repositioned. 2. Longitudinal magnetization of complex parts with upsets such as crankshafts will lead to dead spots where the magnetic field is cancelled out. Care must be taken to assure magnetization of all areas in perpendicular directions.
Large castings, forgings, or shafting	1. Longitudinal field easily attained by means of cable wrapping.	1. Multiple magnetization may be required due to configuration of part.
Miscellaneous small parts	1. Easy and fast, especially where residual magnetization is applicable. 2. No electrical contact. 3. Relatively complex parts can usually be processed with same ease as those with simple cross section.	1. L/D (length/diameter) ratio important consideration in determining adequacy of ampere-turns. 2. Effective L/D ratio can be altered by utilizing pieces of similar cross-sectional area. 3. Use smaller coil for more intense field. 4. Sensitivity diminishes at ends of part due to general leakage field pattern. 5. Quick break desirable to minimize end effect on short parts with low L/D ratio.
Induced Current Fixtures		
Examination of ring-shaped part for circumferential-type discontinuities.	1. No electrical contact. 2. All surface of part subjected to toroidal-type mag- netic field. 3. Single process for 100 % coverage. 4. Can be automated.	1. Laminated core required through ring. 2. Type of magnetizing current must be compatible with method. 3. Other conductors encircling field must be avoided. 4. Large diameters require special consideration.
Ball examination	1. No electrical contact. 2. 100 % coverage for discontinuities in any direction with three-step process and proper orientation between steps. 3. Can be automated.	1. For small-diameter balls, limited to residual magnetization.
Disks and gears	1. No electrical contact. 2. Good sensitivity at or near periphery or rim. 3. Sensitivity in various areas can be varied by core or pole-piece selection.	1. 100 % coverage may require two-step process with core or pole-piece variation, or both. 2. Type of magnetizing current must be compatible with part geometry.
Yokes:		
Examination of large surface areas for surface-type discontinuities.	1. No electrical contact. 2. Highly portable. 3. Can locate discontinuities in any direction with proper orientation.	1. Time consuming. 2. Must be systematically repositioned in view of random discontinuity orientation.
Miscellaneous parts requiring examination of localized areas.	1. No electrical contact. 2. Good sensitivity to direct surface discontinuities. 3. Highly portable. 4. Wet or dry technique. 5. Alternating-current type can also serve as demagnetizer in some instances.	1. Must be properly positioned relative to orientation of discontinuities. 2. Relatively good contact must be established between part and poles. 3. Complex part geometry may cause difficulty. 4. Poor sensitivity to subsurface-type discontinuities except in isolated areas.

12.3.1 *Direct Contact Magnetization*—For direct magnetization, physical contact must be made between the ferromagnetic part and the current carrying electrodes connected to the power source. Both localized area magnetization and overall part magnetization are direct contact means of part magnetization, and can be achieved through the use of prods, head and tailstock, clamps, and magnetic leeches.

12.3.2 *Localized Area Magnetization:*

12.3.2.1 *Prod Technique*—The prod electrodes are first pressed firmly against the part under examination (see Fig. 2). The magnetizing current is then passed through the prods and into the area of the part in contact with the prods. This establishes a circular magnetic field in the part around and between each prod electrode, sufficient to cause local

AVA Documents
Document Sharing Hub
Full document details: ASTM E709-21

magnetic particle examination (see Fig. 2). (**Warning—** Extreme care should be taken to maintain clean prod tips, to minimize heating at the point of contact and to prevent arc burns and local overheating on the surface being examined since these may cause adverse effects on material properties. Arc burns may cause metallurgical damage; if the tips are solid copper, copper penetration into the part may occur. Prods should not be used on machined surfaces or on aerospace component parts.)

(1) Unrectified AC limits the prod technique to the detection of surface discontinuities. Half-wave rectified AC is most desirable since it will detect both surface and near-surface discontinuities. The prod technique generally utilizes dry magnetic particle materials due to better particle mobility. Wet magnetic particles are not generally used with the prod technique because of potential electrical and flammability hazards.

(2) Proper prod examination requires a second placement with the prods rotated approximately 90° from the first placement to assure that all existing discontinuities are revealed. Depending on the surface coverage requirements, overlap between successive prod placements may be necessary. On large surfaces, it is good practice to layout a grid for prod/yoke placement.

12.3.2.2 *Manual Clamp/Magnetic Leech Technique*—Local areas of complex components may be magnetized by electrical contacts manually clamped or attached with magnetic leeches to the part (Fig. 5). As with prods, sufficient overlap may be necessary if examination of the contact location is required.

FIG. 5 Direct Contact Magnetization Through Magnetic Leech Clamp of Part

12.3.2.3 *Overall Magnetization:*

(*1*) *Head and Tailstock Contact*—Parts may be clamped between two electrodes (such as a head and tailstock of horizontal wet magnetic particle equipment) and the magnetizing current applied directly through the part (Fig. 6). The size and shape of the part will determine whether both field directions can be obtained with such equipment.

(*2*) *Clamps*—The magnetizing current may be applied to the part under examination by clamping (Fig. 7) the current carrying electrodes to the part, producing a circular magnetic field.

(*3*) *Multidirectional Magnetization Technique*—With suitable circuitry, it is possible to produce a multidirectional (oscillating) field in a part by selectively switching the magnetic field within the part between electrode contacts/clamps positioned approximately 90° apart or by using a combination of switched direct and indirect methods, such as contact and coil. This permits building up indications in all possible directions and may be considered the equivalent of magnetizing in two or more directions (Fig. 8). On some complex shapes as many as 16 to 20 steps may be required with conventional equipment. With multidirectional magnetization, it is usually possible to reduce the magnetizing steps required by more than half. In many instances, the number of steps may be reduced to one. It is essential that the wet continuous method, be used and that the magnetic field direction and relative intensity be determined by AS 5371 shims as described in Appendix X2 or with an identical part with discontinuities in all areas of interest.

Documents
Document Sharing Hub
Full document details: ASTM E709-21

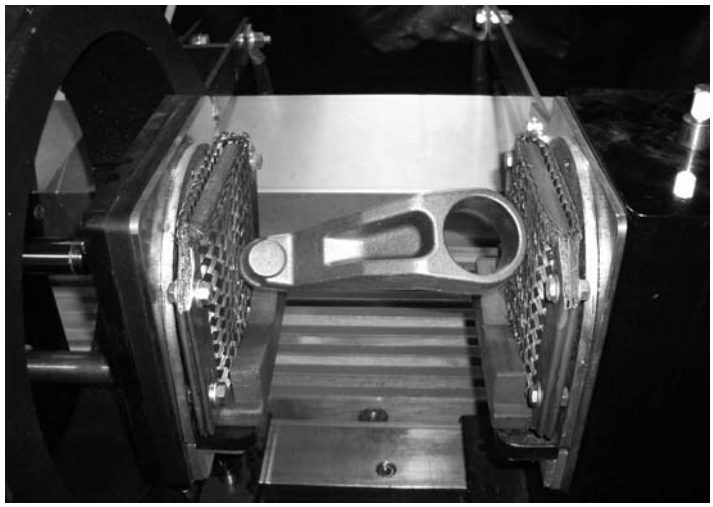

FIG. 6 Direct Contact Shot

FIG. 7 Spring Loaded Contact Clamp

12.3.3 *Indirect Magnetization*—Indirect part magnetization involves the use of a preformed coil, cable wrap, yoke, or a internal conductor to induce a magnetic field. Coil, cable wrap, and yoke magnetization are referred to as longitudinal magnetization in the part (see 13.5).

12.3.3.1 *Coil and Cable Magnetization*—When coil (Fig. 4) or cable wrap (Fig. 9a and b) techniques are used, the magnetizing force is proportional to ampere turns (see X3.2.2).

12.3.3.2 *Internal Conductor, Induced Current Magnetization*—Indirect circular magnetization of hollow pieces/parts can be performed by passing the magnetizing current through an internal conductor (Fig. 10(a) and Fig. 10(b)) or cable used as an internal conductor or through an induced current fixture (Fig. 8(a)). Internal conductors may be solid or hollow and are ideally made from non-ferrous material. Ferrous internal conductors will function as well, but will generate substantial heat due to magnetic domain movement and a reduced magnetic field outside the conductor when compared to a non-ferrous conductor. Additionally, when using ferro-magnetic conductors, the inspector must be made aware of the possibility of magnetic writing. When using internal conductors, the distance along the part circumference, which may be effectively examined should be taken as approximately four times the diameter of the internal conductor, as illustrated in Fig. 10(b). The presence of suitable fields in the effective region of examination should be verified. The entire circumference should be examined by rotating the part on the conductor, allowing for approximately a 10 % magnetic field overlap. Internal conductors are widely used in magnetic particle examination to provide:

(1) A circular field on both the inside surface and outside surface of tubular pieces that cannot be duplicated by the direct current technique.

(2) A non-contact means of part magnetization virtually eliminating the possibility of arc burning the material, as can be the case with current flow through contacts, such as prods or clamps.

(3) Substantial processing advantages over direct contact techniques on ring-shaped parts.

(4) In general it is not important for the internal conductor to be centered because the flux lines follow the path of least resistance through the ferromagnetic material. On large diameter materials, the internal conductor should be within 6 in. of the center. The resulting field is concentric relative to the axis of the piece and is maximum at the inside surface.

12.3.3.3 *Pole Pieces, Coil Magnetization*—It is recommended that parts being positioned in a magnetizing coil have a minimum L/D of 3 to 1. One may artificially lengthen the part by placing magnetic "pole pieces" on either side of the part or by stacking low L/D parts side by side in the coil as shown in Fig. 11(a). For ring shaped parts, one or more parts may be placed on a steel pipe/rod or on a laminated core in the coil as illustrated in Fig. 11(b).

12.3.3.4 *Yoke Magnetization*—A magnetic field can be induced into a part by means of an electromagnet (see Fig. 1), where the part or a portion thereof becomes the magnetic path between the poles (acts as a keeper) and discontinuities preferentially transverse to the alignment of the pole pieces are indicated. Most yokes are energized by an input of AC and produce a magnetizing field of AC, half-wave DC, or full-wave DC. A permanent magnet can also introduce a magnetic field in the part, but its use is restricted (see 6.3.10).

AVA Documents
Document Sharing Hub

Full document details: ASTM E709-21

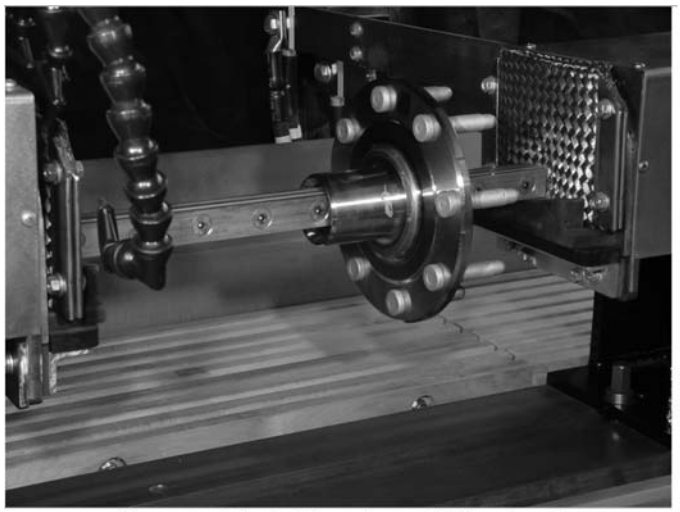

Figure A - Typical 2-vector multidirectional wet horizontal using laminated core

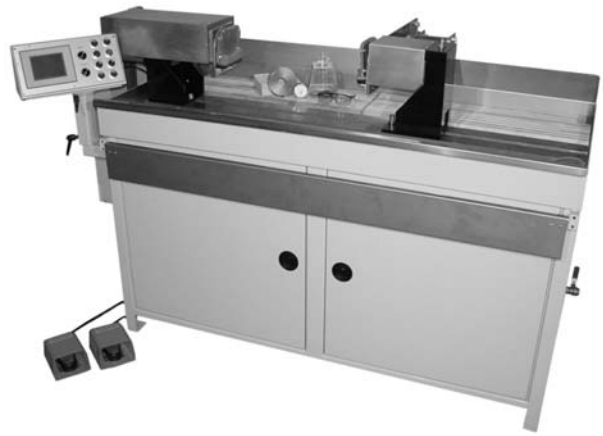

Figure B - Typical 2-vector multidirectional wet horizontal

FIG. 8 Multidirectional Magnetic Particle Units

FIG. 9 Cable Wrap Magnetization Examples (9a – Low Fill Factor Example)

FIG. 9 Cable Wrap Magnetization Examples (9b – High Fill Factor Example) *(continued)*

13. Direction of Magnetic Fields

13.1 *Discontinuity Orientation vs. Magnetic Field Direction*—Since indications are not normally obtained when discontinuities are parallel to the magnetic field, and since indications may occur in various or unknown directions in a part, each part must be magnetized in at least two directions approximately at right angles to each other as noted in 4.3.2. On some parts circular magnetization may be used in two or more directions, while on others both circular and longitudinal magnetization are used to achieve the same result. For purposes of demagnetization verification, circular magnetism normally precedes longitudinal magnetization. A multidirectional field can also be employed to achieve part magnetization in more than one direction.

13.2 *Circular Magnetization*—Circular magnetization (Fig. 12) is the term used when electric current is passed through a part, or by use of an internal conductor (see 12.3.3.2) through an internal opening in the part, inducing a magnetic field at right angles to the current flow. Circular fields normally produce strong residual fields, but are not measurable because the flux is contained within the part.

13.3 *Transverse Magnetization*—Transverse magnetization is the term used when the magnetic field is established across the part and the lines of flux complete their loop outside the part. Placing a yoke across a bar normal to the bar axis would produce a transverse field.

13.4 *Toroidal Magnetization*—When magnetizing a part with a toroidal shape, such as a solid wheel or the disk with a center opening, an induced field that is radial to the disk is most useful for the detection of discontinuities in a circumferential direction. In such applications this field may be more effective than multiple shots across the periphery, but requires special equipment.

AVA Documents
Document Sharing Hub

Full document details: ASTM E709-21

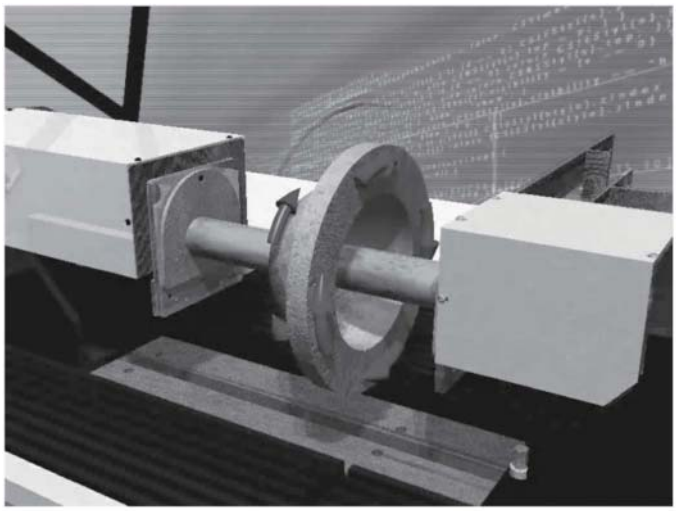

Figure A

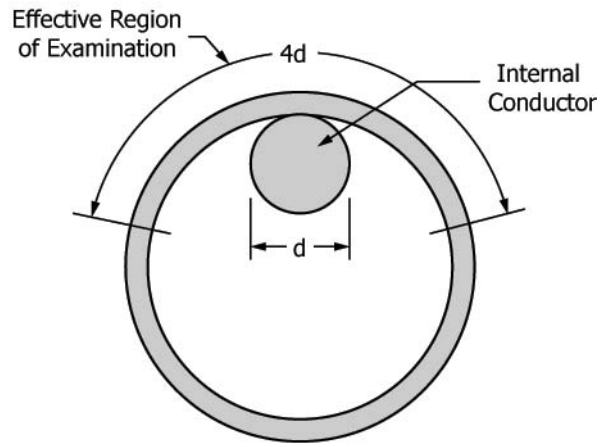

Figure B

FIG. 10 Internal Bar Conductors

FIG. 11 (a) Magnetic Pole Pieces by Stacking Parts

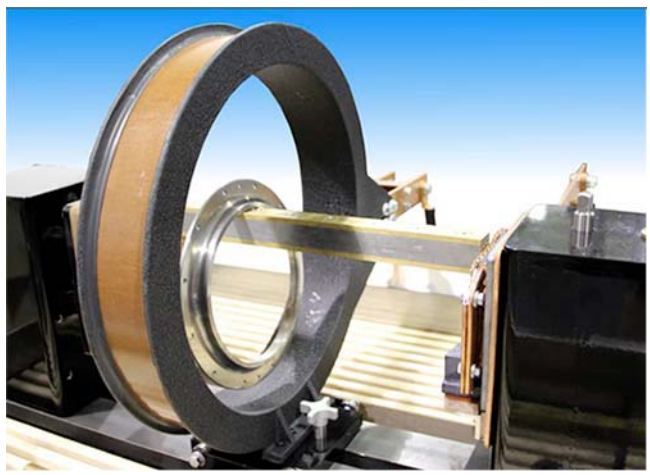

FIG. 11 (b) Magnetic Pole Piece Inserted Through Hollow Part *(continued)*

13.5 *Longitudinal Magnetization*—Longitudinal magnetization (Fig. 13) is the term used when a magnetic field is generated by an electric current passing through a multiturn, which encloses the part or section of the part to be examined.

13.6 *Multidirectional Magnetization*—Multidirectional magnetization may be used to fulfill the requirement for magnetization in two directions if it is demonstrated that it is effective in all areas of interest. Examine parts in accordance with 20.8.2 or shims manufactured to the requirements of AS 5371 (see Appendix X2), or as otherwise approved by the Level III (3) and the Cognizant Engineering Organization, may be used to verify field direction, strength, and balance in multidirectional magnetization. Balance of the field intensity is critical. The field intensity should be balanced in all directions. The particle application must be timed so that the magnetization levels reach full value in all directions, while the particles are mobile on the surface under examination.

13.6.1 When actual parts with known defects are used, the number and orientation(s) of the defects (for example, axial, longitudinal, circumferential, etc.) should be noted. The magnetic field intensity can be considered as being properly balanced when all noted defects can be readily identified with particle indications.

13.7 *Flexible Laminated Strips for Magnetic Particle Testing*

13.7.1 Flexible laminated strips as described in Appendix X1 may be used to ensure proper field direction during magnetic particle examination. The longitudinal axis of the strip should be placed perpendicular to the direction of the magnetic field of interest in order to generate the strongest particle indications on the strip. Flexible laminated strips may only be used as a tool to demonstrate the direction of the external magnetic field.

14. Magnetic Field Strength

14.1 *Magnetizing Field Strengths*—To produce interpretable indications, the magnetic field in the part must have sufficient strength and proper orientation. For the indications to be

AVA Documents
Document Sharing Hub

Full document details: ASTM E709-21