This international standard was developed in accordance with internationally recognized principles on standardization established in the Decision on Principles for the Development of International Standards, Guides and Recommendations issued by the World Trade Organization Technical Barriers to Trade (TBT) Committee.

Designation: E750 – 15 (Reapproved 2020)

Standard Practice for Characterizing Acoustic Emission Instrumentation[1]

This standard is issued under the fixed designation E750; the number immediately following the designation indicates the year of original adoption or, in the case of revision, the year of last revision. A number in parentheses indicates the year of last reapproval. A superscript epsilon (ε) indicates an editorial change since the last revision or reapproval.

1. Scope*

1.1 This practice is recommended for use in testing and measuring operating characteristics of acoustic emission electronic components or units. (See Appendix X1 for a description of components and units.) It is not intended that this practice be used for routine checks of acoustic emission instrumentation, but rather for periodic evaluation or in the event of a malfunction. The sensor is not addressed in this document other than suggesting methods for standardizing system gains (equalizing them channel to channel) when sensors are present.

1.2 Where the manufacturer provides testing and measuring details in an operating and maintenance manual, the manufacturer's methods should be used in conjunction with the methods described in this practice.

1.3 The methods (techniques) used for testing and measuring the components or units of acoustic emission instrumentation, and the results of such testing and measuring should be documented. Documentation should consist of photographs, screenshots, charts or graphs, calculations, and tabulations where applicable.

1.4 AE systems that use computers to control the collection, storage, display, and data analysis, might include waveform collection as well as a wide selection of measurement parameters (features) relating to the AE signal. The manufacturer provides a specification for each system that specifies the operating range and conditions for the system. All calibration and acceptance testing of computer-based AE systems must use the manufacturer's specification as a guide. This practice does not cover testing of the computer or computer peripherals.

1.5 The values stated in SI units are to be regarded as standard. No other units of measurement are included in this standard.

1.6 *This standard does not purport to address all of the safety concerns, if any, associated with its use. It is the responsibility of the user of this standard to establish appropriate safety, health, and environmental practices and determine the applicability of regulatory limitations prior to use.*

1.7 *This international standard was developed in accordance with internationally recognized principles on standardization established in the Decision on Principles for the Development of International Standards, Guides and Recommendations issued by the World Trade Organization Technical Barriers to Trade (TBT) Committee.*

2. Referenced Documents

2.1 *ASTM Standards:*[2]

E1316 Terminology for Nondestructive Examinations

2.2 *ANSI Standard:*[3]

ANSI/IEEE 100-1984 Dictionary of Electrical and Electronic Terms

2.3 *Other Documents:*

Manufacturer's Operating and Maintenance Manuals pertinent to the specific instrumentation or component

3. Terminology

3.1 *Definitions*—For definitions of additional terms relating to acoustic emission, refer to Terminology E1316.

4. Summary of Practice

4.1 Tests and measurements should be performed to determine the instrumentation bandwidth, frequency response, gain, noise level, threshold level, dynamic range, signal overload point, dead time, and counter accuracy.

4.2 Where acoustic emission test results depend upon the reproduced accuracy of the temporal, spatial, or spectral histories, additional measurements of instrumentation parameters should be performed to determine the specific limits of instrumentation performance. Examples of such measurements may include amplifier slew rate, gate window width and position, and spectral analysis.

[1] This practice is under the jurisdiction of ASTM Committee E07 on Nondestructive Testing and is the direct responsibility of Subcommittee E07.04 on Acoustic Emission Method.

Current edition approved June 1, 2020. Published July 2020. Originally approved in 1980. Last previous edition approved in 2015 as E750 – 15. DOI: 10.1520/E0750-15R20.

[2] For referenced ASTM standards, visit the ASTM website, www.astm.org, or contact ASTM Customer Service at service@astm.org. For *Annual Book of ASTM Standards* volume information, refer to the standard's Document Summary page on the ASTM website.

[3] Available from American National Standards Institute (ANSI), 25 W. 43rd St., 4th Floor, New York, NY 10036.

*A Summary of Changes section appears at the end of this standard

Copyright © ASTM International, 100 Barr Harbor Drive, PO Box C700, West Conshohocken, PA 19428-2959. United States

Documents
Document Sharing Hub
Full document details: ASTM E750-15(2020)

4.3 Tests and measurements should be performed to determine the loss in effective sensor sensitivity resulting from the capacitive loading of the cable between the preamplifier and the sensor. The cable and preamplifier should be the same as that used for the acoustic emission tests without substitution. (See also Appendix Appendix X2.)

4.3.1 Important tests of a computer-based AE system include the evaluation of limits and linearity of the available parameters such as:

(a) Amplitude,
(b) Duration,
(c) Rise Time,
(d) Energy, and
(e) AE Arrival Time.

4.3.2 The processing speed of these data should be measured as described in 7.4.3 for both single- and multiple-channel operation.

4.3.3 The data storage capability should be tested against the specification for single- and multiple-channel operation. Processing speed is a function of number of channels, parameters being measured, timing parameter settings, AE signal duration, front-end filtering, storage device (RAM, disk), and on-line analysis settings (number of graphs, data listings, location algorithms, and more). If waveform recording is used, this may influence the processing speed further.

5. Significance and Use

5.1 This practice provides information necessary to document the accuracy and performance of an Acoustic Emission system. This information is useful for reference purposes to assure that the instrumentation performance remains consistent with time and use, and provides the information needed to adjust the system to maintain its consistency.

5.2 The methods set forth in this practice are not intended to be either exclusive or exhaustive.

5.3 Difficult or questionable instrumentation measurements should be referred to electronics engineering personnel.

5.4 It is recommended that personnel responsible for carrying out instrument measurements using this practice should be experienced in instrumentation measurements, as well as all the required test equipment being used to make the measurements.

6. Apparatus

6.1 The basic test instruments required for measuring the operating characteristics of acoustic emission instrumentation include:

6.1.1 *Variable Sine Wave Generator or Oscillator,*
6.1.2 *True RMS Voltmeter,*
6.1.3 *Oscilloscope,*
6.1.4 *Variable Attenuator, graduated in decibels,* and
6.1.5 *Tone Burst Generator.*

6.2 Additional test instruments may be used for more specialized measurements of acoustic emission instrumentations or components. They are as follows:

6.2.1 *Variable-Function Generator,*
6.2.2 *Time Interval Meter,*
6.2.3 *Frequency Meter, or Counter,*
6.2.4 *Random Noise Generator,*
6.2.5 *Spectrum Analyzer,*
6.2.6 *D-C Voltmeter,*
6.2.7 *Pulse-Modulated Signal Generator,*
6.2.8 *Variable Pulse Generator,*
6.2.9 *Phase Meter,* and
6.2.10 *Electronic AE Simulator* (or an Arbitrary Waveform Generator (AWG) can be used providing an automated evaluation).

6.3 An electronic AE simulator (or AWG) is necessary to evaluate the operation of computer-based AE instruments. A detailed example of the use of an electronic AE simulator (or AWG) is given in 7.4.3 under dead time measurement. The instruction manual for the electronic AE simulator provides details on the setup and adjustment of the simulator. Control of pulse frequency, rise time, decay, repetition rate, and peak amplitude in the simulator makes it possible to simulate a wide range of AE signal conditions.

7. Measurement Procedure

7.1 *Frequency Response and Bandwidth Measurements:*

7.1.1 The instrumentation, shown in Fig. 1, includes the preamplifier with amplification and signal filters, possibly connected to the AE system which might have additional signal filters, amplification, and interconnecting cables. All measurements and tests should be documented. If the preamplifier is to be tested without the AE system connected, it should be

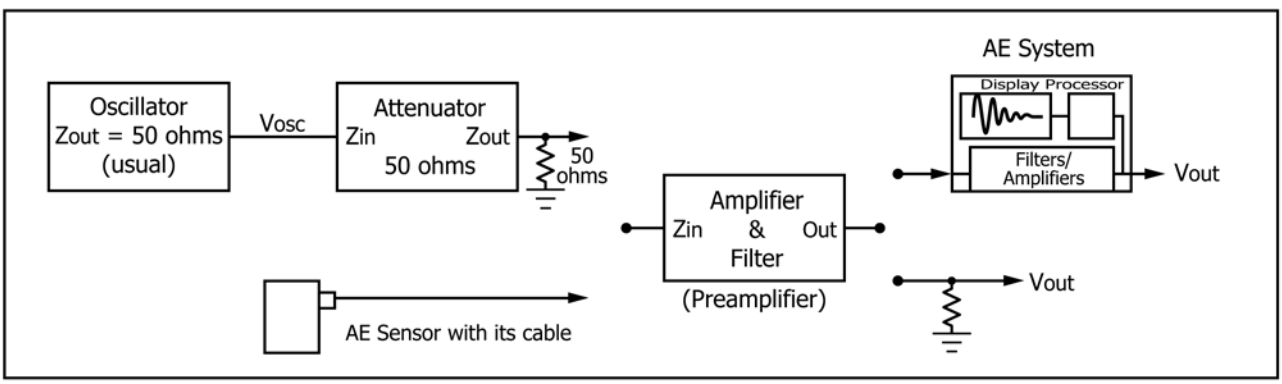

FIG. 1 Component Configuration Used for Testing and Measuring the Frequency Response, Amplification, Noise, Signal Overload, Recovery Time, and Threshold of Acoustic Emission Instrumentation

AVA Documents
Document Sharing Hub

Full document details: ASTM E750-15(2020)

terminated with the normal working load as shown on the bottom right of Fig. 1.

7.1.2 An acceptable frequency response should be flat between cutoff frequencies within 3 dB of the reference frequency. The reference frequency is the geometric mean of the nominal bandwidth of the instrumentation. The mean frequency is calculated as follows:

$$f_M = (f_L f_H)^{\frac{1}{2}}$$

where:

f_M = mean frequency,
f_L = nominal lower cutoff, and
f_H = nominal upper cutoff.

7.1.3 The bandwidth should include all contiguous frequencies with amplitude variations as specified by the manufacturer. Instruments that include signal processing of amplitude as a function of frequency should have bandwidth amplitude variations as specified by the manufacturer.

7.1.4 With the instrumentation connected to the oscillator and attenuator, see Fig. 1 and the sine wave oscillator set well within the instrumentation's specified dynamic range, the frequency response should be measured between frequency limits specified in 7.1.2. The oscillator is maintained at a fixed amplitude and the frequency is swept through the frequency limits. The preamplifier or AE system voltage output is monitored with an RMS voltmeter. Values of amplitude are recorded for each of several frequencies within and beyond the nominal cutoff frequencies. The recorded values should be plotted. The amplitude scale may be converted to decibels. The frequency scale may be plotted either linearly or logarithmically. Appendix X2 provides further discussion of wave shaping components.

7.1.5 A spectrum analyzer may be used in conjunction with a white noise source or an oscilloscope may be used in conjunction with a sweep frequency oscillator to determine bandwidth. With a white noise source connected to the input, a spectrum analyzer connected to the output will record the frequency response.

7.1.6 The measured bandwidth is the difference between the corner frequencies at which the response is 3 dB less than the response at the reference frequency.

7.2 *Gain Measurements:*

7.2.1 The electronic amplification is comprised of the preamplifier gain, the wave filters insertion gains or losses and the AE system's gains or losses. (See Appendix X2 for an explanation of gain measurements.)

7.2.2 The electronic amplification may be measured with the test setup shown in Fig. 1, with the oscillator and attenuator connected. The sine wave oscillator is set to the reference frequency. The oscillator amplitude is set well within the dynamic range of the instrumentation to avoid distortion due to overload. With the voltmeter at V_{osc}, oscillator amplitude is set to 1 V. The attenuator is set for a value greater than the anticipated electronic amplification. Next, the voltmeter is moved to V_{out} (preamplifier or AE system voltage output depending on the test being performed). The attenuator is now adjusted until the voltmeter again reads 1 V. The electronic amplification is equal to the new setting on the attenuator. A white noise generator or sweep generator and spectrum or FFT analyzer may be used in place of the oscillator and RMS voltmeter.

NOTE 1—If the input impedance of the preamplifier is not both resistive and equal to the required load impedance of the attenuator, proper compensation should be made.

7.3 *Dynamic Range Measurements:*

7.3.1 The criterion used for establishing dynamic range should be documented as the signal overload point, referenced to the instrumentation noise amplitude, while keeping like measurements for both readings (for example, peak voltage to peak voltage, peak-peak voltage or RMS to RMS readings). Alternatively, the reference amplitude may be the threshold level if the instrumentation includes a voltage comparator for signal detection. The total harmonic distortion criterion should be used for signal processing involving spectrum analysis. All other signal processing may be performed with the signal overload point criterion.

7.3.2 The dynamic range (DR) in decibels should be determined as follows:

$$\mathrm{DR} = 20\log_{10}(\text{signal overload point voltage/background noise voltage})$$

7.3.2.1 The dynamic range of instrumentation exclusive of threshold or voltage comparator circuits, is a ratio of the signal overload level to the noise amplitude. (A brief description of noise sources appears in Appendix X4). An oscilloscope is usually required as an adjunct to determine the characteristics of noise and to monitor the signal overload point.

7.3.2.2 A field measurement of dynamic range may produce substantially different results when compared with a laboratory measurement. This difference is caused by an increase in the reference voltage output, and may result from noise impulses of electrical origin, or ground faults.

7.3.2.3 For an amplifier that has a threshold comparator as its output device, the dynamic range is the ratio of maximum threshold level to input noise level at the comparator. Excess amplitude range in the amplifier contributes to overload immunity but not to the dynamic range. The following measurement will give the effective dynamic range:

$$DR_e = 20\log_{10}(\mathrm{MaxTh/MinTh})$$

where:

DR_e = the effective dynamic range of the system,
MaxTh = the highest settable threshold value that just passes the largest undistorted peak signal input, and
MinTh = the threshold value that passes less than 1 count/s with no input signal.

This dynamic range is the difference between the largest and the smallest AE input that can be reliably detected by the system.

7.3.3 Measurement of instrument electronic noise is accomplished by replacing the oscillator/attenuator of Fig. 1, with the sensor that will be used, including its cable (or with a lumped equivalent capacitance). A lumped capacitance represents the electrical characteristic of the sensor and cable combination without adding mechanical noise interference. The RMS noise voltage is measured with a true RMS voltmeter (see 6.1.7) at

AVA Documents
Document Sharing Hub

Full document details: ASTM E750-15(2020)