NOTICE: This standard has either been superseded and replaced by a new version or withdrawn.
Contact ASTM International (www.astm.org) for the latest information

Designation: E 767 – 96 (Reapproved 2001)

Standard Test Method for Shear Strength Properties of Metal Connector Plates[1]

This standard is issued under the fixed designation E 767; the number immediately following the designation indicates the year of original adoption or, in the case of revision, the year of last revision. A number in parentheses indicates the year of last reapproval. A superscript epsilon (ϵ) indicates an editorial change since the last revision or reapproval.

INTRODUCTION

The use of prepunched metal connector plates with or without integral projecting teeth as well as solid metal connector plates, usually fabricated from structural quality sheet coils, such as described in Specification A 653/A 653M, to fasten wood members together is a widely accepted practice. In many applications, these plates must resist shear forces, in one or two planes.

These plates must resist the force to be transferred from the wood member into the plate at the interface of the connection and wood members. The plate's resistance to a shear force in this plane is a measure of the ability of the teeth or nails to transmit forces from the wood member to the plate. This shear force is developed as the force per unit area of the plate, or force per tooth or nail. The method for arriving at the unit plate value is described in Test Methods D 1761.

These plates must resist shear forces through their cross sections in a plane perpendicular to the face of the plate. This resistance to shear is a measure of the ability of the connection to transmit forces within the connection. This test method is to be used for the determination of unit design values for pairs of plates (one pair on each side of the connection of the three-member specimen) subject to a shear force through their cross section.

During manufacture and subsequent loading of these plates, stress concentrations develop around the teeth and nail holes. Because of these stress concentrations and the difficulty of predicting the path of failure, design values for plates shall be based on tests rather than analytical methods. The shear resistance of the perforated plate is compared to the theoretical shear resistance of a solid metal-coupon control specimen to arrive at the effective shear resistance ratio of the perforated plate in the orientation tested.

If a given section taken through the length of a plate differs in a geometric character from a section taken in an alternative orientation, the effective shear resistance ratio of the plate, that is, the ratio of perforated-plate shear stress and matched solid-section shear stress, shall be a function of the alternative orientation. If this is the case, the test method presented here requires that the net section of the plate be evaluated at six different orientations.

If the net cross section of the plate is identical for all orientations, testing only along its length shall be necessary. The resulting effective shear resistance ratio of the plate is then applicable to all orientations of the plate.

If the effective shear resistance ratio is desired for any specific angle of plate orientation, it shall be evaluated by this test method.

If the plate is without prepunched (or predrilled) holes immediately prior to assembly of the wood members and teeth or nails are not to be located along the shear plane, tests on specimens, following the manufacturer's recommended minimum edge spacing, shall be used to determine the effective shear resistance ratio by this test method.

Since shear tests are difficult to perform on the solid metal-coupon control specimens, tension tests on these control specimens shall be substituted. Such tests shall be conducted in accordance with Test Methods E 8.

Tensile values are related to shear values by the Von Mises yield theory which indicates that the theoretical yielding in shear occurs at a stress equal to 0.577 of the yield stress in tension. For purposes of this test evaluation, the ultimate shear stress and ultimate tensile stress are in the same ratio.

Copyright © ASTM International, 100 Barr Harbor Drive, PO Box C700, West Conshohocken, PA 19428-2959, United States.

Documents
Document Sharing Hub
Full document details: ASTM E767-96(2001)

The test specimens can be used for the evaluation of metal connector plates with integral teeth projecting from one plate side or both plate sides. In the former case, the plates are located along the sides of the test specimen. In the latter case, the plates are located along the interfaces of the test specimen.

An example of determining the shear resistance of metal connector plates is presented in Appendix X1.

Alternate static (monotonic) and dynamic (cyclic) compression and tension tests on two-member test specimens are described in Appendix X2. The selection of the type of test specimen and test setup depends on the specific requirements for test data.

1. Scope

1.1 This test method provides a basic procedure for evaluating the effective shear resistance of the net section of finished metal connector plates.

1.2 The determination of the tensile properties of metal connector plates is covered in Test Method E 489.

1.3 Test Methods D 1761 covers the performance of the teeth and nails in the wood members during the use of metal connector plates.

1.4 This test method serves as a basis for determining the comparative performance of different types and sizes of metal connector plates resisting shear forces.

1.5 This test method provides a procedure for quantifying shear strength properties of metal connector plates and is not intended to establish design values for connections fabricated with these plates.

1.6 This test method does not provide for the corrosion testing of metal connector plates exposed to long-term adverse environmental conditions where plate deterioration occurs as a result of exposure. Under such conditions, special provisions shall be introduced for the testing for corrosion resistance.

1.7 In the case of dispute, the inch-pound units, shown in parentheses, shall be governing.

1.8 *This standard does not purport to address all of the safety concerns, if any, associated with its use. It is the responsibility of the user of this standard to establish appropriate safety and health practices and determine the applicability of regulatory limitations prior to use.*

2. Referenced Documents

2.1 *ASTM Standards:*

A 591/A 591M Specification for Steel Sheet, Electrolytic Zinc-Coated, for Light Coating Mass Applications[2]

A 653/A 653M Specification for Steel Sheet, Zinc-Coated (Galvanized) or Zinc-Iron Alloy-Coated (Galvannealed) by the Hot-Dip Process[2]

A 924/A 924M Specification for General Requirements for Steel Sheet, Metallic-Coated by the Hot-Dip Process[2]

D 1761 Test Methods for Mechanical Fasteners in Wood[3]

E 4 Practices for Force Verification of Testing Machines[4]

E 8 Test Methods for Tension Testing of Metallic Materials[4]

E 489 Test Method for Tensile Strength Properties of Metal Connector Plates[5]

E 575 Practice for Reporting Data from Structural Tests of Building Constructions, Elements, Connections, and Assemblies[5]

E 631 Terminology of Building Constructions[5]

F 680 Test Methods for Nails[6]

2.2 *ANSI Standard:*[7]

ANSI/TPI 1—1995 National Design Standard for Metal-Plate-Connected Wood Truss Construction

2.3 *CSA Standard:*[8]

S 347-M-1980 Methods of Test for Evaluation of Truss Plates Used in Lumber Joints

3. Terminology

3.1 *Definitions*—For general definitions of terms used in this test method, see Terminology E 631. For specific definitions of terms, see the terminology section of Test Method E 489.

3.2 *Symbols Specific to This Standard:*

3.2.1 A—base-metal cross-sectional area (width times base-metal thickness) of solid metal-coupon control specimen.

3.2.2 α—angle of placement for plates tested at a specific orientation (see 8.3 and Figs. 1-4).

3.2.3 F_s—theoretical ultimate shear stress of the solid metal-coupon control specimen (0.577 F_t).

3.2.4 F_t—ultimate tensile stress of solid metal-coupon control specimen.

3.2.5 F_v—basic allowable shear stress in metal.

3.2.6 $f_{s\alpha}$—ultimate shear stress of plate at angle α to lengthwise axis of plate.

3.2.7 f_t—ultimate shear stress of plate at angle α to lengthwise axis of plate, based on thickness of plate with coating thickness deducted.

3.2.8 L—gross length of plate.

3.2.9 l—calculated shear length of plate oriented at angleα to lengthwise axis of plate.

3.2.10 P_α—ultimate shear force resisted by test specimen assembled with plates oriented at angle α to lengthwise axis of plate.

3.2.11 $R_{s\alpha}$—effective shear resistance ratio at angle α, $f_{s\alpha}/F_s$.

[1] This test method is under the jurisdiction of ASTM Committee E06 on Performance of Buildings and is the direct responsibility of Subcommittee E06.13 on Structural Performance of Connections in Building Constructions.

Current edition approved March 10, 1996. Published May 1996.

[2] *Annual Book of ASTM Standards*, Vol 01.06.

[3] *Annual Book of ASTM Standards*, Vol 04.10.

[4] *Annual Book of ASTM Standards*, Vol 03.01.

[5] *Annual Book of ASTM Standards*, Vol 04.07.

[6] *Annual Book of ASTM Standards*, Vol 15.08.

[7] Available from the American National Standards Institute, 11 W. 42nd St., 13th Floor, New York, NY 10036.

[8] Available from the Canadian Standard Association, 178 Rexdale Blvd., Rexdale, ON M9W 1R3, Canada.

Documents
Document Sharing Hub

Full document details: ASTM E767-96(2001)

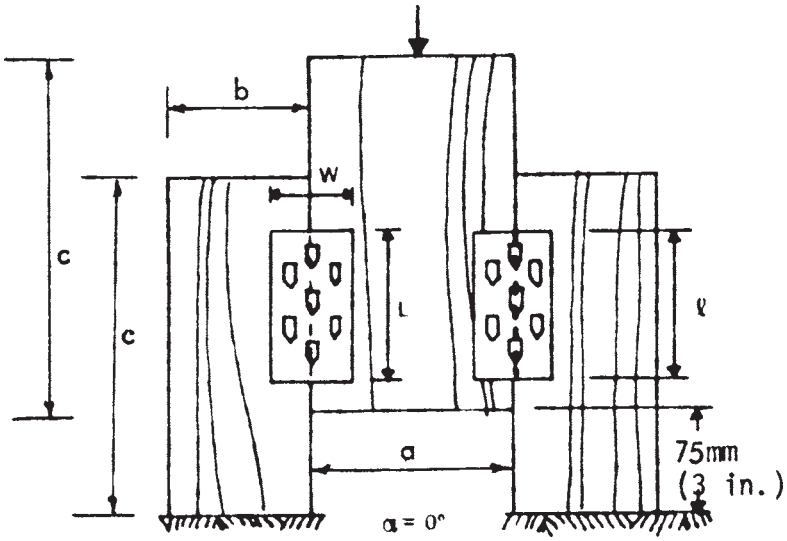

NOTE 1—In Figs. 1-4, outside members of the test specimen must be maintained in a parallel and vertical orientation by suitable means of restraint, using, for example, horizontal wood slats nailed to the front and back edges at top and bottom of the two legs of the two side members, without applying any friction to the three connection members.

FIG. 1 Zero Degree Orientation

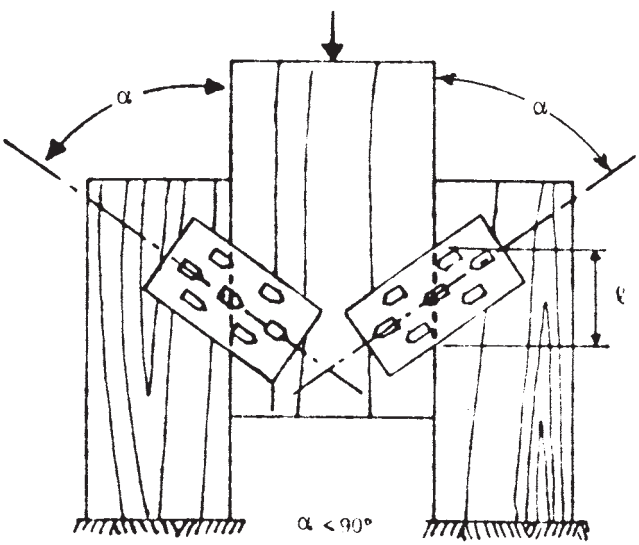

NOTE 1—See Note 1, Fig. 1.

FIG. 2 Acute Angle Orientation

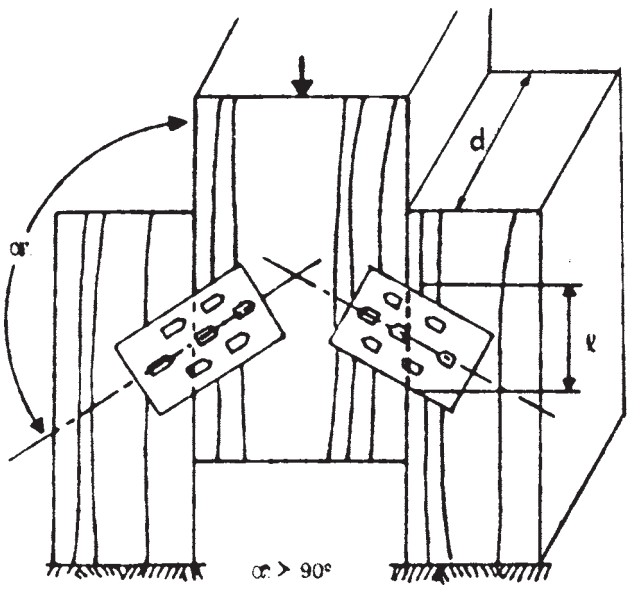

NOTE 1—See Note 1, Fig. 1.

FIG. 3 Obtuse Angle Orientation

3.2.12 *T*—ultimate tensile force resisted by metal-coupon control specimen.

3.2.13 *t*—gross thickness of plate and solid metal-coupon control specimen.

3.2.14 t_l—base-metal thickness of plate and solid metal-coupon control specimen after deducting coating thickness.

3.2.15 *V*—allowable plate shear design value for single plate at angle α to lengthwise axis of plate, based on thickness of plate with coating thickness deducted, in force per unit length.

3.2.16 *w*—gross width of plate.

4. Summary of Test Method

4.1 This test method provides procedures for (*1*) shear tests of finished metal connector plates, (*2*) tension tests of solid metal-coupon control specimens of the same material used in the manufacture of the plates, and (*3*) a comparison of the plates with the solid metal-coupon control specimens in terms of effectiveness.

4.2 When determining the allowable load for a single plate in shear, multiply the effective shear resistance ratio (for applicable orientation) by the basic allowable shear stress for the plate times the base-metal gross cross-sectional area of the plate (for applicable orientation), that is,

AVA Documents
Document Sharing Hub

Full document details: ASTM E767-96(2001)