This international standard was developed in accordance with internationally recognized principles on standardization established in the Decision on Principles for the Development of International Standards, Guides and Recommendations issued by the World Trade Organization Technical Barriers to Trade (TBT) Committee.

Designation: E8/E8M – 24

American Association State
Highway and Transportation Officials Standard
AASHTO No.: T68
An American National Standard

Standard Test Methods for Tension Testing of Metallic Materials[1]

This standard is issued under the fixed designation E8/E8M; the number immediately following the designation indicates the year of original adoption or, in the case of revision, the year of last revision. A number in parentheses indicates the year of last reapproval. A superscript epsilon (ε) indicates an editorial change since the last revision or reapproval.

This standard has been approved for use by agencies of the U.S. Department of Defense.

1. Scope*

1.1 These test methods cover the tension testing of metallic materials in any form at room temperature, specifically, the methods of determination of yield strength, yield point elongation, tensile strength, elongation, and reduction of area.

1.2 The gauge lengths for most round specimens are required to be 4D for E8 and 5D for E8M. The gauge length is the most significant difference between E8 and E8M test specimens. Test specimens made from powder metallurgy (P/M) materials are exempt from this requirement by industry-wide agreement to keep the pressing of the material to a specific projected area and density.

1.3 Exceptions to the provisions of these test methods may need to be made in individual specifications or test methods for a particular material. For examples, see Test Methods and Definitions A370 and Test Methods B557, and B557M.

1.4 Room temperature shall be considered to be 10 °C to 38 °C [50 °F to 100°F] unless otherwise specified.

1.5 The values stated in SI units are to be regarded as separate from inch/pound units. The values stated in each system are not exact equivalents; therefore each system must be used independently of the other. Combining values from the two systems may result in non-conformance with the standard.

1.6 *This standard does not purport to address all of the safety concerns, if any, associated with its use. It is the responsibility of the user of this standard to establish appropriate safety, health, and environmental practices and determine the applicability of regulatory limitations prior to use.*

1.7 *This international standard was developed in accordance with internationally recognized principles on standardization established in the Decision on Principles for the Development of International Standards, Guides and Recommendations issued by the World Trade Organization Technical Barriers to Trade (TBT) Committee.*

2. Referenced Documents

2.1 *ASTM Standards:*[2]

A356/A356M Specification for Steel Castings, Carbon, Low Alloy, and Stainless Steel, Heavy-Walled for Steam Turbines
A370 Test Methods and Definitions for Mechanical Testing of Steel Products
B557 Test Methods for Tension Testing Wrought and Cast Aluminum- and Magnesium-Alloy Products
B557M Test Methods for Tension Testing Wrought and Cast Aluminum- and Magnesium-Alloy Products (Metric)
E4 Practices for Force Calibration and Verification of Testing Machines
E6 Terminology Relating to Methods of Mechanical Testing
E29 Practice for Using Significant Digits in Test Data to Determine Conformance with Specifications
E83 Practice for Verification and Classification of Extensometer Systems
E345 Test Methods of Tension Testing of Metallic Foil
E691 Practice for Conducting an Interlaboratory Study to Determine the Precision of a Test Method
E1012 Practice for Verification of Testing Frame and Specimen Alignment Under Tensile and Compressive Axial Force Application
D1566 Terminology Relating to Rubber
E1856 Guide for Evaluating Computerized Data Acquisition Systems Used to Acquire Data from Universal Testing Machines
E2658 Practices for Verification of Speed for Material Testing Machines

[1] These test methods are under the jurisdiction of ASTM Committee E28 on Mechanical Testing and are the direct responsibility of Subcommittee E28.04 on Uniaxial Testing.

Current edition approved Jan. 1, 2024. Published March 2024. Originally approved in 1924. Last previous edition approved 2022 as E8/E8M – 22.
DOI: 10.1520/E0008_E0008M-24.

[2] For referenced ASTM standards, visit the ASTM website, www.astm.org, or contact ASTM Customer Service at service@astm.org. For *Annual Book of ASTM Standards* volume information, refer to the standard's Document Summary page on the ASTM website.

*A Summary of Changes section appears at the end of this standard

Copyright © ASTM International, 100 Barr Harbor Drive, PO Box C700, West Conshohocken, PA 19428-2959. United States

Documents
Document Sharing Hub
Full document details: ASTM E8/E8M-24

2.2 *ISO/ASTM Standard:*[3]

ISO/ASTM 52909:2024(en) Additive manufacturing of metals — Finished part properties — Orientation and location dependence of mechanical properties for metal parts

3. Terminology

3.1 *Definitions of Terms Common to Mechanical Testing*—

3.1.1 The definitions of mechanical testing terms that appear in the Terminology E6 apply to this test method.

3.1.1.1 These terms include bending strain, constraint, elongation, extensometer, force, gauge length, necking, reduced section, stress-strain diagram, testing machine, and modulus of elasticity.

3.1.2 In addition, the following common terms from Terminology E6 are defined:

3.1.3 *discontinuous yielding, n—in a uniaxial test*, a hesitation or fluctuation of force observed at the onset of plastic deformation, due to localized yielding.

3.1.3.1 *Discussion*—The stress-strain curve need not appear to be discontinuous.

3.1.4 *elongation after fracture, n*—the elongation measured by fitting the two halves of the broken specimen together.

3.1.5 *elongation at fracture, n*—the elongation measured just prior to the sudden decrease in force associated with fracture.

3.1.6 *lower yield strength, LYS [FL^{-2}]—in a uniaxial test*, the minimum stress recorded during discontinuous yielding, ignoring transient effects.

3.1.7 *reduced parallel section, A, n*—the central portion of the specimen that has a nominally uniform cross section, with an optional small taper toward the center, that is smaller than that of the ends that are gripped, not including the fillets.

3.1.7.1 *Discussion*—This term is often called the parallel length in other standards.

3.1.7.2 *Discussion*—Previous versions of E8/E8M defined this term as "reduced section."

3.1.8 *reduction of area, n*—the difference between the original cross-sectional area of a tension test specimen and the area of its smallest cross section.

3.1.8.1 *Discussion*—The reduction of area is usually expressed as a percentage of the original cross-sectional area of the specimen.

3.1.8.2 *Discussion*—The smallest cross section may be measured at or after fracture as specified for the material under test.

3.1.8.3 *Discussion*—The term reduction of area when applied to metals generally means measurement after fracture; when applied to plastics and elastomers, measurement at fracture. Such interpretation is usually applicable to values for reduction of area reported in the literature when no further qualification is given. **(E28.04)**

3.1.9 *tensile strength,* S_u [FL^{-2}], *n*—the maximum tensile stress that a material is capable of sustaining.

3.1.9.1 *Discussion*—Tensile strength is calculated from the maximum force during a tension test carried to rupture and the original cross-sectional area of the specimen.

3.1.10 *uniform elongation,* El_u, *[%]*—the elongation determined at the maximum force sustained by the test specimen just prior to necking or fracture, or both.

3.1.10.1 *Discussion*—Uniform elongation includes both elastic and plastic elongation.

3.1.11 *upper yield strength, UYS [FL^{-2}]—in a uniaxial test*, the first stress maximum (stress at first zero slope) associated with discontinuous yielding at or near the onset of plastic deformation.

3.1.12 *yield point elongation, YPE, n—in a uniaxial test*, the strain (expressed in percent) separating the stress-strain curve's first point of zero slope from the point of transition from discontinuous yielding to uniform strain hardening.

3.1.12.1 *Discussion*— If the transition occurs over a range of strain, the YPE end point is the intersection between *(a)* a horizontal line drawn tangent to the curve at the last zero slope and *(b)* a line drawn tangent to the strain hardening portion of the stress-strain curve at the point of inflection. If there is no point at or near the onset of yielding at which the slope reaches zero, the material has 0 % YPE.

3.1.13 *yield strength, YS* or S_y [FL^{-2}], *n*—the engineering stress at which, by convention, it is considered that plastic elongation of the material has commenced.

3.1.13.1 *Discussion*—This stress may be specified in terms of (*a*) a specified deviation from a linear stress-strain relationship, (*b*) a specified total extension attained, or (*c*) maximum or minimum engineering stresses measured during discontinuous yielding.

3.2 *Definitions of Terms Specific to This Standard:*

3.2.1 *referee test, n*—test made to settle a disagreement as to the conformance to specified requirements, or conducted by a third party to arbitrate between conflicting results. **D1566, D11.08**

4. Significance and Use

4.1 Tension tests provide information on the strength and ductility of materials under uniaxial tensile stresses. This information may be useful in comparisons of materials, alloy development, quality control, and design under certain circumstances.

4.2 The results of tension tests of specimens machined to standardized dimensions from selected portions of a part or material may not totally represent the strength and ductility properties of the entire end product or its in-service behavior in different environments.

4.3 These test methods are considered satisfactory for acceptance testing of commercial shipments. The test methods have been used extensively in the trade for this purpose.

5. Apparatus

5.1 *Testing Machines*—Machines used for tension testing shall conform to the requirements of Practices E4. The forces used in determining tensile strength and yield strength shall be

[3] Available from International Organization for Standardization (ISO), ISO Central Secretariat, Chemin de Blandonnet 8, CP 401, 1214 Vernier, Geneva, Switzerland, https://www.iso.org.

AVA Documents Document Sharing Hub

Full document details: ASTM E8/E8M-24

within the verified force application range of the testing machine as defined in Practices E4. Where verification of the testing machine speed is required, Practices E2658 shall be used unless otherwise specified.

5.2 *Gripping Devices:*

5.2.1 *General*—Various types of gripping devices may be used to transmit the measured force applied by the testing machine to the test specimens. To ensure axial tensile stress within the gauge length, the axis of the test specimen should coincide with the center line of the heads of the testing machine. Any departure from this requirement may introduce bending stresses that are not included in the usual stress computation (force divided by cross-sectional area).

NOTE 1—The effect of this eccentric force application may be illustrated by calculating the bending moment and stress thus added. For a standard 12.5 mm [0.500 in.] diameter specimen, the stress increase is 1.5 percentage points for each 0.025 mm [0.001 in.] of eccentricity. This error increases to 2.5 percentage points/ 0.025 mm [0.001 in.] for a 9 mm [0.350 in.] diameter specimen and to 3.2 percentage points/ 0.025 mm [0.001 in.] for a 6 mm [0.250 in.] diameter specimen.

NOTE 2—Alignment methods are given in Practice E1012.

5.2.2 *Wedge Grips*—Testing machines usually are equipped with wedge grips. These wedge grips generally furnish a satisfactory means of gripping long specimens of ductile metal and flat plate test specimens such as those shown in Fig. 1. If, however, for any reason, one grip of a pair advances farther than the other as the grips tighten, an undesirable bending stress may be introduced. When liners are used behind the wedges, they must be of the same thickness and their faces must be flat and parallel. For best results, the wedges should be supported over their entire lengths by the heads of the testing machine. This requires that liners of several thicknesses be available to cover the range of specimen thickness. For proper gripping, it is desirable that the entire length of the serrated face of each wedge be in contact with the specimen. Proper alignment of wedge grips and liners is illustrated in Fig. 2. For short specimens and for specimens of many materials it is generally necessary to use machined test specimens and to use a special means of gripping to ensure that the specimens, when under load, shall be as nearly as possible in uniformly distributed pure axial tension (see 5.2.3, 5.2.4, and 5.2.5).

5.2.3 *Grips for Threaded and Shouldered Specimens and Brittle Materials*—A schematic diagram of a gripping device for threaded-end specimens is shown in Fig. 3, while Fig. 4 shows a device for gripping specimens with shouldered ends. Both of these gripping devices should be attached to the heads of the testing machine through properly lubricated spherical-seated bearings. The distance between spherical bearings should be as great as feasible.

5.2.4 *Grips for Sheet Materials*—The self-adjusting grips shown in Fig. 5 have proven satisfactory for testing sheet materials that cannot be tested satisfactorily in the usual type of wedge grips.

5.2.5 *Grips for Wire*—Grips of either the wedge or snubbing types as shown in Fig. 5 and Fig. 6 or flat wedge grips may be used.

5.3 *Dimension-Measuring Devices*—Micrometers and other devices used for measuring linear dimensions shall be accurate and precise to at least one half the smallest unit to which the individual dimension is required to be measured.

5.4 *Extensometers*—Extensometers used in tension testing shall conform to the requirements of Practice E83 for the classifications specified by the procedure section of this test method. Extensometers shall be used and verified to include the strains corresponding to the yield strength and elongation at fracture (if determined).

5.4.1 Extensometers with gauge lengths equal to or shorter than the nominal gauge length of the specimen (dimension shown as "*G*-Gauge Length" in the accompanying figures) may be used to determine the yield behavior. For specimens without a reduced section (for example, full cross sectional area specimens of wire, rod, or bar), the extensometer gauge length for the determination of yield behavior shall not exceed 80 % of the distance between grips. For measuring elongation at fracture with an appropriate extensometer, the gauge length of the extensometer shall be equal to the nominal gauge length required for the specimen being tested.

6. Test Specimens

6.1 *General:*

6.1.1 *Specimen Size*—Test specimens shall be either substantially full size or machined, as prescribed in the product specifications for the material being tested.

6.1.2 *Location*—Unless otherwise specified, the axis of the test specimen shall be located within the parent material as follows:

6.1.2.1 At the center for products 40 mm [1.500 in.] or less in thickness, diameter, or distance between flats.

6.1.2.2 Midway from the center to the surface for products over 40 mm [1.500 in.] in thickness, diameter, or distance between flats.

6.1.3 *Specimen Machining*—Improperly prepared test specimens often are the reason for unsatisfactory and incorrect test results. It is important, therefore, that care be exercised in the preparation of specimens, particularly in the machining, to maximize precision and minimize bias in test results.

6.1.3.1 The reduced section including the fillets of prepared specimens should be free of cold work, notches, chatter marks, grooves, gouges, burrs, rough surfaces or edges, overheating, or any other condition which can deleteriously affect the properties to be measured.

NOTE 3—Punching or blanking of the reduced section may produce significant cold work or shear burrs, or both, along the edges which should be removed by machining.

6.1.3.2 Within the reduced parallel section of rectangular specimens, edges or corners should not be ground or abraded in a manner which could cause the actual cross-sectional area of the specimen to be significantly different from the calculated area.

6.1.3.3 For brittle materials, large radius fillets at the ends of the reduced parallel section should be used.

6.1.3.4 The cross-sectional area of the specimen should be smallest at the center of the reduced parallel section to ensure fracture within the gauge length. For this reason, a small taper is permitted in the reduced parallel section of each of the specimens described in the following sections.

AVA Documents
Document Sharing Hub

Full document details: ASTM E8/E8M-24

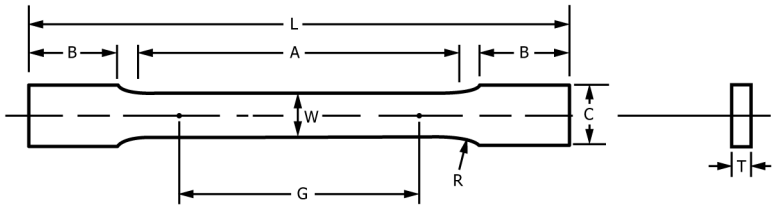

	Dimensions		
	Standard Specimens		Subsize Specimen
	Plate-Type, 40 mm [1.500 in.] Wide	Sheet-Type, 12.5 mm [0.500 in.] Wide	6 mm [0.250 in.] Wide
	mm [in.]	mm [in.]	mm [in.]
G—Gauge length (Note 1 and Note 2)	200.0 ± 0.2 [8.00 ± 0.01]	50.0 ± 0.1 [2.000 ± 0.005]	25.0 ± 0.1 [1.000 ± 0.003]
W—Width (Note 3 and Note 4)	40.0 ± 2.0 [1.500 + 0.125, -0.250]	12.5 ± 0.2 [0.500 ± 0.010]	6.0 ± 0.1 [0.250 ± 0.005]
T—Thickness (Note 5)		thickness of material	
R—Radius of fillet, min (Note 6)	25 [1]	12.5 [0.500]	6 [0.250]
L—Overall length, min (Note 2, Note 7, and Note 8)	450 [18]	200 [8]	100 [4]
A—Length of reduced parallel section, min	225 [9]	57 [2.25]	32 [1.25]
B—Length of grip section, min (Note 9)	75 [3]	50 [2]	30 [1.25]
C—Width of grip section, approximate (Note 4 and Note 9)	50 [2]	20 [0.750]	10 [0.375]

NOTE 1—For the 40 mm [1.500 in.] wide specimen, punch marks for measuring elongation after fracture shall be made on the flat or on the edge of the specimen and within the reduced parallel section. Either a set of nine or more punch marks 25 mm [1 in.] apart, or one or more pairs of punch marks 200 mm [8 in.] apart may be used.

NOTE 2—When elongation measurements of 40 mm [1.500 in.] wide specimens are not required, a minimum length of reduced parallel section (*A*) of 75 mm [2.25 in.] may be used with all other dimensions similar to those of the plate-type specimen.

NOTE 3—For the three sizes of specimens, the ends of the reduced parallel section shall not differ in width by more than 0.10 mm, 0.05 mm or 0.02 mm [0.004 in., 0.002 in. or 0.001 in.], respectively. Also, there may be a gradual decrease in width from the ends to the center, but the width at each end shall not be more than 1 % larger than the width at the center.

NOTE 4—For each of the three sizes of specimens, narrower widths (*W* and *C*) may be used when necessary. In such cases the width of the reduced parallel section should be as large as the width of the material being tested permits; however, unless stated specifically, the requirements for elongation in a product specification shall not apply when these narrower specimens are used.

NOTE 5—The dimension *T* is the thickness of the test specimen as provided for in the applicable material specifications. Minimum thickness of 40 mm [1.500 in.] wide specimens shall be 5 mm [0.188 in.]. Maximum thickness of 12.5 mm and 6 mm [0.500 in. and 0.250 in.] wide specimens shall be 19 and 6 mm [0.750 and 0.250 in.], respectively.

NOTE 6—For the 40 mm [1.500 in.] wide specimen, a 13 mm [0.500 in.] minimum radius at the ends of the reduced parallel section is permitted for steel specimens under 690 MPa [100 000 psi] in tensile strength when a profile cutter is used to machine the reduced section.

NOTE 7—The dimension shown is suggested as a minimum. In determining the minimum length, the grips must not extend in to the transition section between Dimensions *A* and *B*, see Note 9.

NOTE 8—To aid in obtaining axial force application during testing of 6 mm [0.250 in.] wide specimens, the overall length should be as large as the material will permit, up to 200 mm [8.00 in.].

NOTE 9—It is desirable, if possible, to make the length of the grip section large enough to allow the specimen to extend into the grips a distance equal to two thirds or more of the length of the grips. If the thickness of 12.5 mm [0.500 in.] wide specimens is over 10 mm [0.375 in.], longer grips and correspondingly longer grip sections of the specimen may be necessary to prevent failure in the grip section.

NOTE 10—For the three sizes of specimens, the ends of the specimen shall be symmetrical in width with the center line of the reduced parallel section within 2.5 mm, 1.25 mm and 0.13 mm [0.10 in., 0.05 in. and 0.005 in.], respectively. However, for referee testing and when required by product specifications, the ends of the 12.5 mm [0.500 in.] wide specimen shall be symmetrical within 0.2 mm [0.01 in.].

NOTE 11—For each specimen type, the radii of all fillets shall be equal to each other within a tolerance of 1.25 mm [0.05 in.], and the centers of curvature of the two fillets at a particular end shall be located across from each other (on a line perpendicular to the centerline) within a tolerance of 2.5 mm [0.10 in.].

NOTE 12—Specimens with sides parallel throughout their length are permitted, except for referee testing, provided: *(a)* the above tolerances are used; *(b)* an adequate number of marks are provided for determination of elongation; and *(c)* when yield strength is determined, a suitable extensometer is used. If the fracture occurs at a distance of less than 2 W from the edge of the gripping device, the tensile properties determined may not be representative of the material. In acceptance testing, if the properties meet the minimum requirements specified, no further testing is required, but if they are less than the minimum requirements, discard the test and retest.

FIG. 1 Rectangular Tension Test Specimens

AVA Documents
Document Sharing Hub

Full document details: ASTM E8/E8M-24

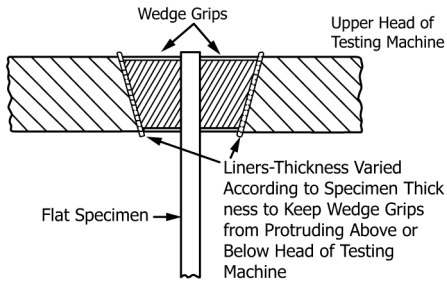

FIG. 2 Wedge Grips with Liners for Flat Specimens

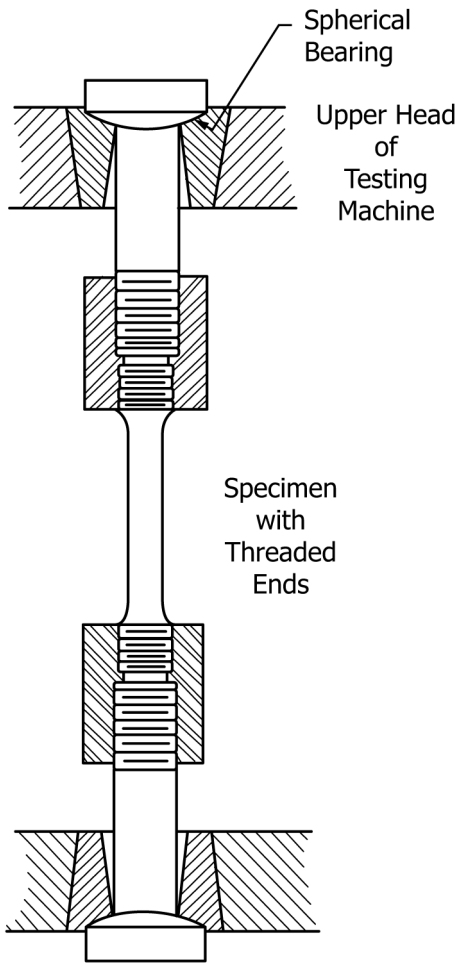

FIG. 3 Gripping Device for Threaded-End Specimens

6.1.4 *Specimen Surface Finish*—When materials are tested with surface conditions other than as manufactured, the surface finish of the test specimens should be as provided in the applicable product specifications.

NOTE 4—Particular attention should be given to the uniformity and quality of surface finish of specimens for high strength and very low ductility materials since this has been shown to be a factor in the variability of test results.

6.1.5 *Specimen Grip Section Symmetry*—Symmetry tolerances for grip sections of specimens (relative to centerlines of reduced parallel sections) are given within Fig. 1 and Fig. 7.

NOTE 5—Symmetry of grip sections of machined specimens relative to the centerlines of reduced parallel sections can affect alignment, stress-strain curves, and test results, especially when the grip [illegible] of

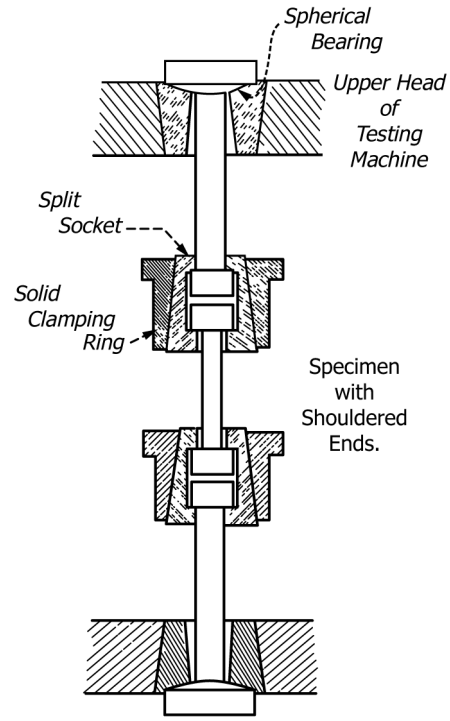

FIG. 4 Gripping Device for Shouldered-End Specimens

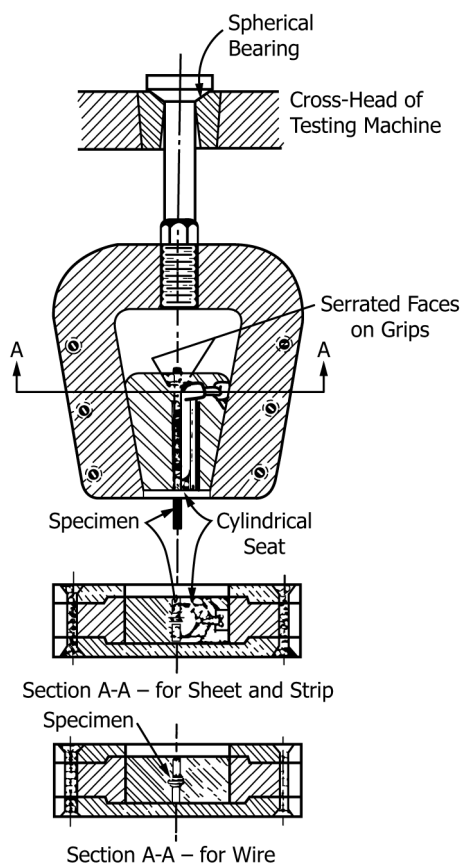

FIG. 5 Gripping Devices for Sheet and Wire Specimens

Documents
Document Sharing Hub
Full document details: ASTM E8/E8M-24

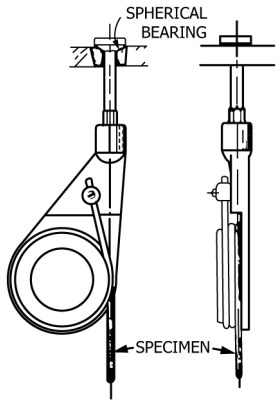

FIG. 6 Snubbing Device for Testing Wire

rectangular specimens are used to locate the specimens within the testing machine. Tighter tolerances, such as those given by Note 10 of Fig. 1 for referee testing, can be used to maintain alignment where asymmetry of specimen grip sections could otherwise result in the reduced parallel section being offset, oriented at an angle, or both, relative to the axis of force application.

NOTE 6—Effects of specimen symmetry and misalignment errors can be minimized by use of certain types of gripping systems or backstops.

6.2 *Plate-Type Specimens*—The standard plate-type test specimen is shown in Fig. 1. This specimen is used for testing metallic materials in the form of plate, shapes, and flat material having a nominal thickness of 5 mm [0.188 in.] or over. When product specifications so permit, other types of specimens may be used, as provided in 6.3, 6.4, and 6.5.

6.3 *Sheet-Type Specimens:*

6.3.1 The standard sheet-type test specimen is shown in Fig. 1. This specimen is used for testing metallic materials in the form of sheet, plate, flat wire, strip, band, hoop, rectangles, and shapes ranging in nominal thickness from 0.13 mm to 19 mm [0.005 in. to 0.750 in.]. When product specifications so permit, other types of specimens may be used, as provided in 6.2, 6.4, and 6.5.

NOTE 7—Test Methods E345 may be used for tension testing of materials in thicknesses up to 0.15 mm [0.0059 in.].

6.3.2 Pin ends as shown in Fig. 8 may be used. In order to avoid buckling in tests of thin and high-strength materials, it may be necessary to use stiffening plates at the grip ends.

6.4 *Round Specimens:*

6.4.1 The standard 12.5 mm [0.500 in.] diameter round test specimen shown in Fig. 9 is used quite generally for testing metallic materials, both cast and wrought.

6.4.2 Fig. 9 also shows small-size specimens proportional to the standard specimen. These may be used when it is necessary to test material from which the standard specimen or specimens shown in Fig. 1 cannot be prepared. Other sizes of small round specimens may be used. In any such small-size specimen it is important that the gauge length for measurement of elongation be four times the diameter of the specimen when following E8 and five times the diameter of the specimen when following E8M.

6.4.3 The shape of the ends of the specimen outside of the gauge length shall be suitable to the material and of a shape to fit the holders or grips of the testing machine so that the forces may be applied axially. Fig. 10 shows specimens with various types of ends that have given satisfactory results.

6.5 *Specimens for Sheet, Strip, Flat Wire, and Plate*—In testing sheet, strip, flat wire, and plate, use a specimen type appropriate for the nominal thickness of the material, as described in the following:

6.5.1 For material with a nominal thickness of 0.13 mm to 5 mm [0.005 in. to 0.1875 in.], use the sheet-type specimen described in 6.3.

6.5.2 For material with a nominal thickness of 5 mm to 12.5 mm [0.1875 in. to 0.500 in.], use either the sheet-type specimen of 6.3 or the plate-type specimen of 6.2.

6.5.3 For material with a nominal thickness of 12.5 mm to 19 mm [0.500 in. to 0.750 in.], use either the sheet-type specimen of 6.3, the plate-type specimen of 6.2, or the largest practical size of round specimen described in 6.4.

6.5.4 For material with a nominal thickness of 19 mm [0.750 in.], or greater, use the plate-type specimen of 6.2 or the largest practical size of round specimen described in 6.4.

6.5.4.1 If the product specifications permit, material of a thickness of 19 mm [0.750 in.], or greater may be tested using a modified sheet-type specimen conforming to the configuration shown by Fig. 1. The thickness of this modified specimen must be machined to 10 mm ± 0.5 mm [0.400 in. ± 0.020 in.], and must be uniform within 0.1 mm [0.004 in.] throughout the reduced parallel section. In the event of disagreement, a round specimen shall be used as the referee test (comparison) specimen.

6.6 *Specimens for Wire, Rod, and Bar:*

6.6.1 For round wire, rod, and bar, test specimens having the full cross-sectional area of the wire, rod, or bar shall be used wherever practicable. The gauge length for the measurement of elongation of wire less than 4 mm [0.125 in.] in diameter shall be as prescribed in product specifications. When testing wire, rod, or bar having a diameter of 4 mm [0.125 in.] or larger, a gauge length equal to four times the diameter shall be used when following E8 and a gauge length equal to five times the diameter shall be used when following E8M unless otherwise specified. The total length of the specimens shall be at least equal to the gauge length plus the length of material required for the full use of the grips employed.

6.6.2 For wire of octagonal, hexagonal, or square cross section, for rod or bar of round cross section where the specimen required in 6.6.1 is not practicable, and for rod or bar of octagonal, hexagonal, or square cross section, one of the following types of specimens shall be used:

6.6.2.1 *Full Cross Section* (Note 8)—It is permissible to reduce the test section slightly with abrasive cloth or paper, or machine it sufficiently to ensure fracture within the gauge marks. For material not exceeding 5 mm [0.188 in.] in diameter or distance between flats, the cross-sectional area may be reduced to not less than 90 % of the original area without changing the shape of the cross section. For material over 5 mm [0.188 in.] in diameter or distance between flats, the diameter or distance between flats may be reduced by not more than 0.25 mm [0.010 in.] without changing the shape of the cross section. Square, hexagonal, or octagonal wire or rod not exceeding 5 mm [0.188 in.] between flats may be machined to a

AVA Documents
Document Sharing Hub

Full document details: ASTM E8/E8M-24

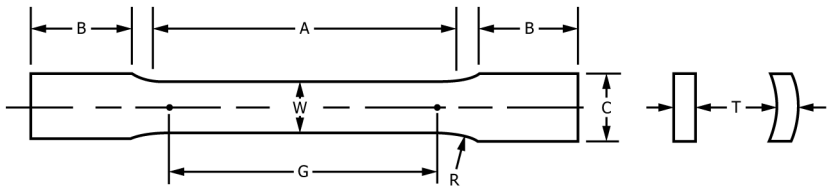

	Dimensions						
	Specimen 1	Specimen 2	Specimen 3	Specimen 4	Specimen 5	Specimen 6	Specimen 7
	mm [in.]	mm [in.]	mm [in.]	mm [in.]	mm [in.]	mm [in.]	mm [in.]
G—Gauge length	50.0 ± 0.1 [2.000 ± 0.005]	50.0 ± 0.1 [2.000 ± 0.005]	200.0 ± 0.2 [8.00 ± 0.01]	50.0 ± 0.1 [2.000 ± 0.005]	100.0 ± 0.1 [4.000 ± 0.005]	50.0 ± 0.1 [2.000 ± 0.005]	100.0 ± 0.1 [4.000 ± 0.005]
W—Width (Note 1)	12.5 ± 0.2 [0.500 ± 0.010]	40.0 ± 2.0 [1.500 + 0.125, -0.250]	40.0 ± 2.0 [1.500 + 0.125, -0.250]	20.0 ± 0.7 [0.750 ± 0.031]	20.0 ± 0.7 [0.750 ± 0.031]	25.0 ± 1.5 [1.000 ± 0.062]	25.0 ± 1.5 [1.000 ± 0.062]
T—Thickness	measured thickness of specimen						
R—Radius of fillet, min	12.5 [0.5]	25 [1]	25 [1]	25 [1]	25 [1]	25 [1]	25 [1]
A—Length of reduced parallel section, min	60 [2.25]	60 [2.25]	230 [9]	60 [2.25]	120 [4.5]	60 [2.25]	120 [4.5]
B—Length of grip section, min (Note 2)	75 [3]	75 [3]	75 [3]	75 [3]	75 [3]	75 [3]	75 [3]
C—Width of grip section, approximate (Note 3)	20 [0.75]	50 [2]	50 [2]	25 [1]	25 [1]	40 [1.5]	40 [1.5]

NOTE 1—The ends of the reduced parallel section shall differ from each other in width by not more than 0.5 %. There may be a gradual taper in width from the ends to the center, but the width at each end shall be not more than 1 % greater than the width at the center.

NOTE 2—It is desirable, if possible, to make the length of the grip section great enough to allow the specimen to extend into the grips a distance equal to two thirds or more of the length of the grips.

NOTE 3—The ends of the specimen shall be symmetrical with the center line of the reduced parallel section within 1 mm [0.05 in.] for specimens 1, 4, and 5, and 2.5 mm [0.10 in.] for specimens 2, 3, 6, and 7.

NOTE 4—For each specimen type, the radii of all fillets shall be equal to each other within a tolerance of 1.25 mm [0.05 in.], and the centers of curvature of the two fillets at a particular end shall be located across from each other (on a line perpendicular to the centerline) within a tolerance of 2.5 mm [0.10 in.].

NOTE 5—For circular segments, the cross-sectional area may be calculated by multiplying *W* and *T*. If the ratio of the dimension *W* to the diameter of the tubular section is larger than about ⅙ the error in using this method to calculate the cross-sectional area may be appreciable. In this case, the exact equation (see 7.2.2.4) must be used to determine the area.

NOTE 6—Specimens with *G/W* less than 4 should not be used for determination of elongation.

NOTE 7—Specimens with sides parallel throughout their length are permitted, except for referee testing, provided: *(a)* the above tolerances are used; *(b)* an adequate number of marks are provided for determination of elongation; and *(c)* when yield strength is determined, a suitable extensometer is used. If the fracture occurs at a distance of less than 2 W from the edge of the gripping device, the tensile properties determined may not be representative of the material. If the properties meet the minimum requirements specified, no further testing is required, but if they are less than the minimum requirements, discard the test and retest.

FIG. 7 Tension Test Specimens for Large-Diameter Tubular Products

round having a cross-sectional area not smaller than 90 % of the area of the maximum inscribed circle. Fillets, preferably with a radius of 10 mm [0.375 in.], but not less than 3 mm [0.125 in.], shall be used at the ends of the reduced parallel sections. Square, hexagonal, or octagonal rod over 5 mm [0.188 in.] between flats may be turned to a round having a diameter no smaller than 0.25 mm [0.010 in.] less than the original distance between flats.

NOTE 8—The ends of copper or copper alloy specimens may be flattened 10 % to 50 % from the original dimension in a jig similar to that shown in Fig. 11, to facilitate fracture within the gauge marks. In flattening the opposite ends of the test specimen, care shall be taken to ensure that the four flattened surfaces are parallel and that the two parallel surfaces on the same side of the axis of the test specimen lie in the same plane.

6.6.2.2 For rod and bar, the largest practical size of round specimen as described in 6.4 may be used in place of a test specimen of full cross section. Unless otherwise specified in the product specification, specimens shall be parallel to the direction of rolling or extrusion.

6.7 *Specimens for Rectangular Bar*—In testing rectangular bar one of the following types of specimens shall be used:

6.7.1 *Full Cross Section*—It is permissible to reduce the width of the specimen throughout the test section with abrasive cloth or paper, or by machining sufficiently to facilitate fracture within the gauge marks, but in no case shall the reduced width be less than 90 % of the original. The edges of the midlength of the reduced parallel section not less than 20 mm [¾ in.] in length shall be parallel to each other and to the longitudinal

AVA Documents
Document Sharing Hub

Full document details: ASTM E8/E8M-24

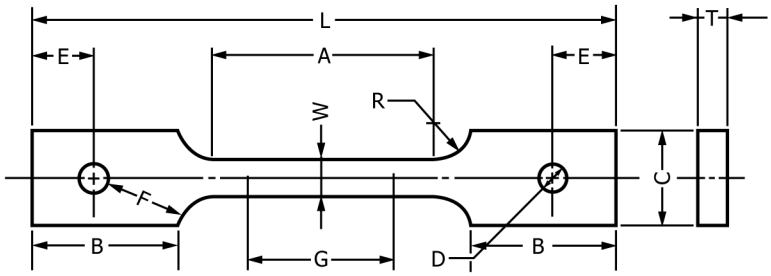

Dimensions, mm [in.]	
G—Gauge length	50.0 ± 0.1 [2.000 ± 0.005]
W—Width (Note 1)	12.5 ± 0.2 [0.500 ± 0.010]
T—Thickness, max (Note 2)	16 [0.625]
R—Radius of fillet, min (Note 3)	13 [0.5]
L—Overall length, min	200 [8]
A—Length of reduced parallel section, min	57 [2.25]
B—Length of grip section, min	50 [2]
C—Width of grip section, approximate	50 [2]
D—Diameter of hole for pin, min (Note 4)	13 [0.5]
E—Edge distance from pin, approximate	40 [1.5]
F—Distance from hole to fillet, min	13 [0.5]

NOTE 1—The ends of the reduced parallel section shall differ in width by not more than 0.1 mm [0.002 in.]. There may be a gradual taper in width from the ends to the center, but the width at each end shall be not more than 1 % greater than the width at the center.

NOTE 2—The dimension *T* is the thickness of the test specimen as stated in the applicable product specifications.

NOTE 3—For some materials, a fillet radius *R* larger than 13 mm [0.500 in.] may be needed.

NOTE 4—Holes must be on center line of reduced parallel section within ± 0.05 mm [0.002 in].

NOTE 5—Variations of dimensions *C*, *D*, *E*, *F*, and *L* may be used that will permit failure within the gauge length.

FIG. 8 Pin-Loaded Tension Test Specimen with 50 mm [2 in.] Gauge Length

Documents
Document Sharing Hub

Full document details: ASTM E8/E8M-24

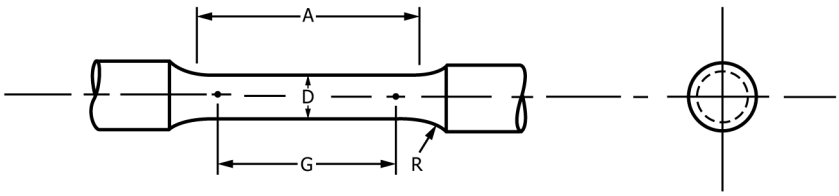

Dimensions, mm [in.]

For Test Specimens with Gauge Length Four times the Diameter [E8]

	Standard Specimen	Small-Size Specimens Proportional to Standard			
	Specimen 1	Specimen 2	Specimen 3	Specimen 4	Specimen 5
G—Gauge length	50.0 ± 0.1 [2.000 ± 0.005]	36.0 ± 0.1 [1.400 ± 0.005]	24.0 ± 0.1 [1.000 ± 0.005]	16.0 ± 0.1 [0.640 ± 0.005]	10.0 ±0.1 [0.450 ± 0.005]
D—Diameter (Note 1)	12.5 ± 0.2 [0.500 ± 0.010]	9.0 ±0.1 [0.350 ± 0.007]	6.0 ± 0.1 [0.250 ± 0.005]	4.0 ± 0.1 [0.160 ± 0.003]	2.5 ± 0.1 [0.113 ± 0.002]
R—Radius of fillet, min	10 [0.375]	8 [0.25]	6 [0.188]	4 [0.156]	2 [0.094]
A—Length of reduced parallel section, min (Note 2)	56 [2.25]	45 [1.75]	30 [1.25]	20 [0.75]	16 [0.625]

Dimensions, mm [in.]

For Test Specimens with Gauge Length Five times the Diameter [E8M]

	Standard Specimen	Small-Size Specimens Proportional to Standard			
	Specimen 1	Specimen 2	Specimen 3	Specimen 4	Specimen 5
G—Gauge length	62.5 ± 0.1 [2.500 ± 0.005]	45.0 ± 0.1 [1.750 ± 0.005]	30.0 ± 0.1 [1.250 ± 0.005]	20.0 ± 0.1 [0.800 ± 0.005]	12.5 ± 0.1 [0.565 ± 0.005]
D—Diameter (Note 1)	12.5 ± 0.2 [0.500 ± 0.010]	9.0 ± 0.1 [0.350 ± 0.007]	6.0 ± 0.1 [0.250 ± 0.005]	4.0 ± 0.1 [0.160 ± 0.003]	2.5 ± 0.1 [0.113 ± 0.002]
R—Radius of fillet, min	10 [0.375]	8 [0.25]	6 [0.188]	4 [0.156]	2 [0.094]
A—Length of reduced parallel section, min (Note 2)	75 [3.0]	54 [2.0]	36 [1.4]	24 [1.0]	20 [0.75]

NOTE 1—The reduced parallel section may have a gradual taper from the ends toward the center, with the ends not more than 1 % larger in diameter than the center (controlling dimension).

NOTE 2—If desired, the length of the reduced parallel section may be increased to accommodate an extensometer of any convenient gauge length. Reference marks for the measurement of elongation should, nevertheless, be spaced at the indicated gauge length.

NOTE 3—The gauge length and fillets may be as shown, but the ends may be of any form to fit the holders of the testing machine in such a way that the force shall be axial (see Fig. 10). If the ends are to be held in wedge grips it is desirable, if possible, to make the length of the grip section great enough to allow the specimen to extend into the grips a distance equal to two thirds or more of the length of the grips.

NOTE 4—On the round specimens in Figs. 9 and 10, the gauge lengths are equal to four [E8] or five times [E8M] the nominal diameter. In some product specifications other specimens may be provided for, but unless the 4-to-1 [E8] or 5-to-1 [E8M] ratio is maintained within dimensional tolerances, the elongation values may not be comparable with those obtained from the standard test specimen.

NOTE 5—The use of specimens smaller than 6 mm [0.250 in.] diameter shall be restricted to cases when the material to be tested is of insufficient size to obtain larger specimens or when all parties agree to their use for acceptance testing. Smaller specimens require suitable equipment and greater skill in both machining and testing.

NOTE 6—For inch/pound units only: Five sizes of specimens often used have diameters of approximately 0.505 in., 0.357 in., 0.252 in., 0.160 in., and 0.113 in., the reason being to permit easy calculations of stress from loads, since the corresponding cross-sectional areas are equal or close to 0.200 in.^{2}, 0.100 in.^{2}, 0.0500 in.^{2}, 0.0200 in.^{2}, and 0.0100 in.^{2}, respectively. Thus, when the actual diameters agree with these values, the stresses (or strengths) may be computed using the simple multiplying factors 5, 10, 20, 50, and 100, respectively. (The metric equivalents of these five diameters do not result in correspondingly convenient cross-sectional areas and multiplying factors.)

FIG. 9 Standard 12.5 mm [0.500 in.] Round Tension Test Specimen and Examples of Small-Size Specimens Proportional to the Standard Specimen

Documents
Document Sharing Hub

Full document details: ASTM E8/E8M-24

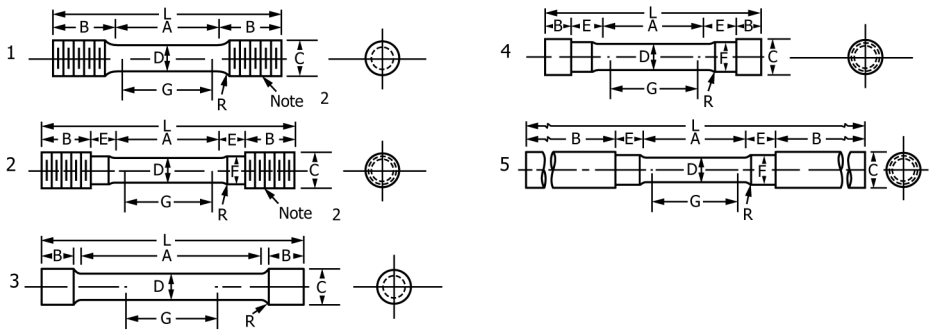

Dimensions, mm [in.] For Test Specimens with Gauge Length Four times the Diameter [E8]	Specimen 1	Specimen 2	Specimen 3	Specimen 4	Specimen 5
G—Gauge length	50 ± 0.1 [2.000 ± 0.005]	50 ± 0.1 [2.000 ± 0.005]	50 ± 0.1 [2.000 ± 0.005]	50 ± 0.1 [2.000 ± 0.005]	50 ± 0.1 [2.000 ± 0.005]
D—Diameter (Note 1)	12.5 ± 0.2 [0.500 ± 0.010]	12.5 ± 0.2 [0.500 ± 0.010]	12.5 ± 0.2 [0.500 ± 0.010]	12.5 ± 0.2 [0.500 ± 0.010]	12.5 ± 0.2 [0.500 ± 0.010]
R—Radius of fillet, min	10 [0.375]	10 [0.375]	2 [0.0625]	10 [0.375]	10 [0.375]
A—Length of reduced parallel section	56 [2.25] min	56 [2.25] min	100 [4] approximate	56 [2.25] min	56 [2.25] min
L—Overall length, approximate	145 [5]	155 [5.5]	155 [5.5]	140 [4.75]	255 [9.5]
B—Length of end section (Note 3)	35 [1.375] approximate	25 [1] approximate	20 [0.75] approximate	15 [0.5] approximate	75 [3] min
C—Diameter of end section	20 [0.75]	20 [0.75]	20 [0.75]	22 [0.875]	20 [0.75]
E—Length of shoulder and fillet section, approximate		15 [0.625]		20 [0.75]	15 [0.625]
F—Diameter of shoulder		15 [0.625]		15 [0.625]	15 [0.625]

Dimensions, mm [in.] For Test Specimens with Gauge Length Five times the Diameter [E8M]	Specimen 1	Specimen 2	Specimen 3	Specimen 4	Specimen 5
G—Gauge length	62.5 ± 0.1 [2.500 ± 0.005]	62.5 ± 0.1 [2.500 ± 0.005]	62.5 ± 0.1 [2.500 ± 0.005]	62.5 ± 0.1 [2.500 ± 0.005]	62.5 ± 0.1 [2.500 ± 0.005]
D—Diameter (Note 1)	12.5 ± 0.2 [0.500 ± 0.010]	12.5 ± 0.2 [0.500 ± 0.010]	12.5 ± 0.2 [0.500 ± 0.010]	12.5 ± 0.2 [0.500 ± 0.010]	12.5 ± 0.2 [0.500 ± 0.010]
R—Radius of fillet, min	10 [0.375]	10 [0.375]	2 [0.0625]	10 [0.375]	10 [0.375]
A—Length of reduced parallel section	75 [3] min	75 [3] min	75 [3] approximate	75 [3] min	75 [3] min
L—Overall length, approximate	145 [5]	155 [5.5]	155 [5.5]	140 [4.75]	255 [9.5]
B—Length of end section (Note 3)	35 [1.375] approximate	25 [1] approximate	20 [0.75] approximate	15 [0.5] approximate	75 [3] min
C—Diameter of end section	20 [0.75]	20 [0.75]	20 [0.75]	22 [0.875]	20 [0.75]
E—Length of shoulder and fillet section, approximate		15 [0.625]		20 [0.75]	15 [0.625]
F—Diameter of shoulder		15 [0.625]		15 [0.625]	15 [0.625]

NOTE 1—The reduced parallel section may have a gradual taper from the ends toward the center with the ends not more than 1 %. larger in diameter than the center.

NOTE 2—On Specimens 1 and 2, any standard thread is permissible that provides for proper alignment and aids in assuring that the specimen will break within the reduced parallel section.

NOTE 3—On Specimen 5 it is desirable, if possible, to make the length of the grip section great enough to allow the specimen to extend into the grips a distance equal to two thirds or more of the length of the grips.

NOTE 4—The values stated in SI units in the table for Fig. 10 are to be regarded as separate from the inch/pound units. The values stated in each system are not exact equivalents; therefore each system must be used independently of the other.

FIG. 10 Various Types of Ends for Standard Round Tension Test Specimens

Documents
Document Sharing Hub
Full document details: ASTM E8/E8M-24

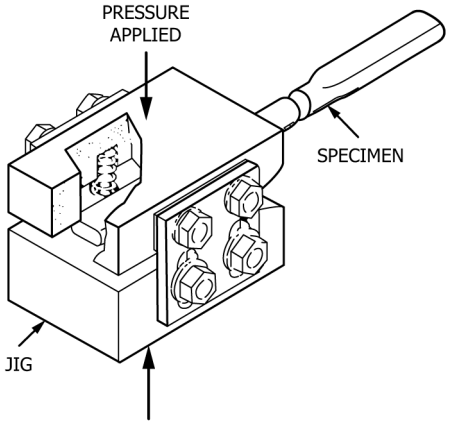

FIG. 11 Squeezing Jig for Flattening Ends of Full-Size Tension Test Specimens

axis of the specimen within 0.05 mm [0.002 in.]. Fillets, preferably with a radius of 10 mm [⅜ in.] but not less than 3 mm [⅛ in.] shall be used at the ends of the reduced parallel sections.

6.7.2 Rectangular bar of thickness small enough to fit the grips of the testing machine but of too great width may be reduced in width by cutting to fit the grips, after which the cut surfaces shall be machined or cut and smoothed to ensure failure within the desired section. The reduced width shall not be less than the original bar thickness. Also, one of the types of specimens described in 6.2, 6.3, and 6.4 may be used.

6.8 *Shapes, Structural and Other*—In testing shapes other than those covered by the preceding sections, one of the types of specimens described in 6.2, 6.3, and 6.4 shall be used.

6.9 *Specimens for Pipe and Tube* (Note 9):

6.9.1 For all small tube (Note 9), particularly sizes 25 mm [1 in.] and under in nominal outside diameter, and frequently for larger sizes, except as limited by the testing equipment, it is standard practice to use tension test specimens of full-size tubular sections. Snug-fitting metal plugs shall be inserted far enough into the ends of such tubular specimens to permit the testing machine jaws to grip the specimens properly. The plugs shall not extend into that part of the specimen on which the elongation is measured. Elongation is measured over a length of four times the diameter when following E8 or five times the diameter when following E8M unless otherwise stated in the product specification. Fig. 12 shows a suitable form of plug, the location of the plugs in the specimen, and the location of the specimen in the grips of the testing machine.

NOTE 9—The term "tube" is used to indicate tubular products in general, and includes pipe, tube, and tubing.

6.9.2 For large-diameter tube that cannot be tested in full section, longitudinal tension test specimens shall be cut as indicated in Fig. 13. Specimens from welded tube shall be located approximately 90° from the weld. If the tube-wall thickness is under 20 mm [0.750 in.], either a specimen of the form and dimensions shown in Fig. 7 or one of the small-size specimens proportional to the standard 12.5 mm [0.500 in.] specimen, as mentioned in 6.4.2 and shown in Fig. 9, shall be used. Specimens of the type shown in Fig. 7 may be tested with

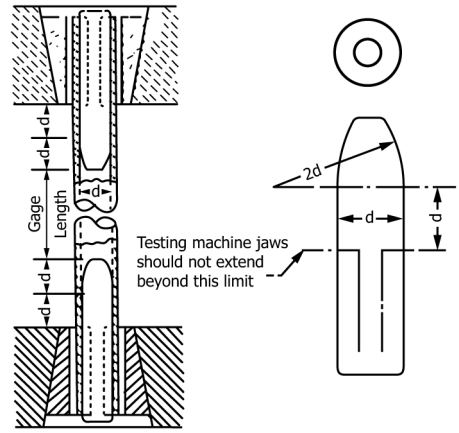

NOTE 1—The diameter of the plug shall have a slight taper from the line limiting the test machine jaws to the curved section.

FIG. 12 Metal Plugs for Testing Tubular Specimens, Proper Location of Plugs in Specimen and of Specimen in Heads of Testing Machine

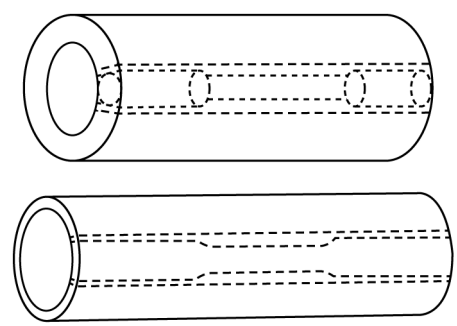

NOTE 1—The edges of the blank for the specimen shall be cut parallel to each other.

FIG. 13 Location from Which Longitudinal Tension Test Specimens Are to be Cut from Large-Diameter Tube

grips having a surface contour corresponding to the curvature of the tube. When grips with curved faces are not available, the ends of the specimens may be flattened without heating. If the tube-wall thickness is 20 mm [0.750 in.] or over, the standard specimen shown in Fig. 9 shall be used.

NOTE 10—In clamping of specimens from pipe and tube (as may be done during machining) or in flattening specimen ends (for gripping), care must be taken so as not to subject the reduced section including the fillets to any deformation or cold work, as this would alter the mechanical properties.

6.9.3 Transverse tension test specimens for tube may be taken from rings cut from the ends of the tube as shown in Fig. 14. Flattening of the specimen may be either after separating as in *A*, or before separating as in *B*. Transverse tension test specimens for large tube under 20 mm [0.750 in.] in wall thickness shall be either of the small-size specimens shown in Fig. 9 or of the form and dimensions shown for Specimen 2 in Fig. 7. When using the latter specimen, either or both surfaces of the specimen may be machined to secure a uniform thickness, provided not more than 15 % of the normal wall thickness is removed from each surface. For large tube 20 mm [0.750 in.] and over in wall thickness, the standard specimen shown in Fig. 9 shall be used for transverse tension tests.

AVA Documents
Document Sharing Hub

Full document details: ASTM E8/E8M-24