This international standard was developed in accordance with internationally recognized principles on standardization established in the Decision on Principles for the Development of International Standards, Guides and Recommendations issued by the World Trade Organization Technical Barriers to Trade (TBT) Committee.

Designation: E84 – 23d

An American National Standard

Standard Test Method for Surface Burning Characteristics of Building Materials[1]

This standard is issued under the fixed designation E84; the number immediately following the designation indicates the year of original adoption or, in the case of revision, the year of last revision. A number in parentheses indicates the year of last reapproval. A superscript epsilon (ε) indicates an editorial change since the last revision or reapproval.

This standard has been approved for use by agencies of the U.S. Department of Defense.

1. Scope*

1.1 This fire-test-response standard for the comparative surface burning behavior of building materials is applicable to exposed surfaces such as walls and ceilings. The test is conducted with the specimen in the ceiling position with the surface to be evaluated exposed face down to the ignition source. The material, product, or assembly shall be capable of being mounted in the test position during the test. Thus, the specimen shall either be self-supporting by its own structural quality, held in place by added supports along the test surface, or secured from the back side.

1.2 Test Method E84 is a 10-min fire-test response method. The following standards address testing of materials in accordance with test methods that are applications or variations of the test method or apparatus used for Test Method E84:

1.2.1 Materials required by the user to meet an extended 30-min duration tunnel test shall be tested in accordance with Test Method E2768.

1.2.2 Wires and cables for use in air-handling spaces shall be tested in accordance with NFPA 262.

1.2.3 Pneumatic tubing for control systems shall be tested in accordance with UL 1820.

1.2.4 Combustible sprinkler piping shall be tested in accordance with UL 1887.

1.2.5 Optical fiber and communications raceways for use in air handling spaces shall be tested in accordance with UL 2024.

NOTE 1—Annex A13 includes additional information describing a standard other than those listed in this section that also utilizes a modification of the apparatus used for Test Method E84.

1.3 The purpose of this test method is to determine the relative burning behavior of the material by observing the flame spread along the specimen. Flame spread and smoke developed index are reported. However, there is not necessarily a relationship between these two measurements.

1.4 The use of supporting materials on the underside of the test specimen has the ability to lower the flame spread index from those which might be obtained if the specimen could be tested without such support. These test results do not necessarily relate to indices obtained by testing materials without such support.

1.5 Testing of materials that melt, drip, or delaminate to such a degree that the continuity of the flame front is destroyed, results in low flame spread indices that do not relate directly to indices obtained by testing materials that remain in place.

1.6 *Units*—The values stated in inch-pound units are to be regarded as standard. The values given in parentheses are mathematical conversions to SI units that are provided for information only and are not considered standard.

1.7 The text of this standard references notes and footnotes that provide explanatory information. These notes and footnotes, excluding those in tables and figures, shall not be considered as requirements of the standard.

1.8 *This standard is used to measure and describe the response of materials, products, or assemblies to heat and flame under controlled conditions, but does not by itself incorporate all factors required for fire-hazard or fire-risk assessment of the materials, products, or assemblies under actual fire conditions.*

1.9 *This standard does not purport to address all of the safety concerns, if any, associated with its use. It is the responsibility of the user of this standard to establish appropriate safety, health, and environmental practices and determine the applicability of regulatory limitations prior to use.*

1.10 *Fire testing is inherently hazardous. Adequate safeguards for personnel and property shall be employed in conducting these tests.*

1.11 *This international standard was developed in accordance with internationally recognized principles on standardization established in the Decision on Principles for the*

[1] This test method is under the jurisdiction of ASTM Committee E05 on Fire Standards and is the direct responsibility of Subcommittee E05.22 on Surface Burning.

Current edition approved Dec. 1, 2023. Published January 2024. Originally approved in 1950. Last previous edition approved in 2023 as E84 – 23c. DOI: 10.1520/E0084-23D.

*A Summary of Changes section appears at the end of this standard

Copyright © ASTM International, 100 Barr Harbor Drive, PO Box C700, West Conshohocken, PA 19428-2959. United States

Documents
Document Sharing Hub
Full document details: ASTM E84-23d

Development of International Standards, Guides and Recommendations issued by the World Trade Organization Technical Barriers to Trade (TBT) Committee.

2. Referenced Documents

2.1 *ASTM Standards:*[2]

A390 Specification for Zinc-Coated (Galvanized) Steel Poultry Fence Fabric (Hexagonal and Straight Line)

C1186 Specification for Flat Fiber-Cement Sheets

C1288 Specification for Fiber-Cement Interior Substrate Sheets

C1396/C1396M Specification for Gypsum Board

D4442 Test Methods for Direct Moisture Content Measurement of Wood and Wood-Based Materials

D4444 Test Method for Laboratory Standardization and Calibration of Hand-Held Moisture Meters

E69 Test Method for Combustible Properties of Treated Wood by the Fire-Tube Apparatus

E160 Test Method for Combustible Properties of Treated Wood by the Crib Test [3]

E162 Test Method for Surface Flammability of Materials Using a Radiant Heat Energy Source

E176 Terminology of Fire Standards

E286 Test Method for Surface Flammability of Building Materials Using an 8-ft (2.44-m) Tunnel Furnace (Withdrawn 1991)[3]

E691 Practice for Conducting an Interlaboratory Study to Determine the Precision of a Test Method

E2231 Practice for Specimen Preparation and Mounting of Pipe and Duct Insulation Materials to Assess Surface Burning Characteristics

E2404 Practice for Specimen Preparation and Mounting of Textile, Paper or Polymeric (Including Vinyl) and Wood Wall or Ceiling Coverings, Facings and Veneers, to Assess Surface Burning Characteristics

E2573 Practice for Specimen Preparation and Mounting of Site-Fabricated Stretch Systems to Assess Surface Burning Characteristics

E2579 Practice for Specimen Preparation and Mounting of Wood Products to Assess Surface Burning Characteristics

E2599 Practice for Specimen Preparation and Mounting of Reflective Insulation, Radiant Barrier and Vinyl Stretch Ceiling Materials for Building Applications to Assess Surface Burning Characteristics

E2688 Practice for Specimen Preparation and Mounting of Tapes to Assess Surface Burning Characteristics

E2690 Practice for Specimen Preparation and Mounting of Caulks and Sealants to Assess Surface Burning Characteristics

E2768 Test Method for Extended Duration Surface Burning Characteristics of Building Materials (30 min Tunnel Test)

E2988 Practice for Specimen Preparation and Mounting of Flexible Fibrous Glass Insulation for Metal Buildings to Assess Surface Burning Characteristics

E3202 Practice for Specimen Preparation and Mounting of Plastic Composites for Use as Deck Boards, Stair Treads, Guards or Handrails to Assess Surface Burning Characteristics

E3287 Practice for Specimen Preparation of Fenestration Profiles Intended to Support Non-Combustible In-Fill Materials to Assess Surface Burning Characteristics

2.2 *NFPA Standards:*[4]

NFPA 90A Standard for the Installation of Air-Conditioning and Ventilating Systems (2021)

NFPA 262 Standard Method of Test for Flame Travel and Smoke of Wires and Cables for Use in Air-Handling Spaces (2019)

2.3 *UL Standards:*[5]

UL 723 Standard for Test for Surface Burning Characteristics of Building Materials (2023)

UL 1820 Standard for Safety for Fire Test of Pneumatic Tubing for Flame and Smoke Characteristics (2021)

UL 1887 Standard for Fire Test of Plastic Sprinkler Pipe for Visible Flame and Smoke Characteristics (2021)

UL 2024 Standard for Safety for Optical Fiber and Communication Cable Raceway (2021)

UL 2846 Standard for Fire Test of Plastic Water Distribution Plumbing Pipe for Visible Flame and Smoke Characteristics (2021)

2.4 *ICC Codes:*[6]

IMC International Mechanical Code (2021)

3. Terminology

3.1 *Definitions:*

3.1.1 For definitions of terms used in this test method refer to Terminology E176. The term flame spread index from Terminology E176 is of particular interest to this standard and is defined in 3.1.2.

3.1.2 *flame spread index, n*—a number or classification indicating a comparative measure derived from observations made during the progress of the boundary of a zone of flame under defined test conditions.

3.2 *Definitions of Terms Specific to This Standard:*

3.2.1 *self-supporting (as related to fire testing of specimens), adj*—having the ability to remain on the ceiling of the test apparatus without the use of additional supporting elements and without exhibiting behavior, such as sagging and falling debris, that interferes with the burner flame and progression of the flame front over the surface of the specimen before the application of the burner flame and at any time during the test.

3.2.1.1 *Discussion*—Self-supporting specimens, after being mounted on the ledges of the test furnace, are structurally capable of supporting their own weight prior to the test and

[2] For referenced ASTM standards, visit the ASTM website, www.astm.org, or contact ASTM Customer Service at service@astm.org. For *Annual Book of ASTM Standards* volume information, refer to the standard's Document Summary page on the ASTM website.

[3] The last approved version of this historical standard is referenced on www.astm.org.

[4] Available from National Fire Protection Association, 1 Battery March Park, Quincy, MA 02169.

[5] Available from Underwriters Laboratories, 333 Pfingsten Road, Northbrook, IL 60062.

[6] Available from International Code Council (ICC), 500 New Jersey Avenue, NW 6th Floor, Washington, DC 20001.

AVA Documents
Document Sharing Hub

Full document details: ASTM E84-23d

during the test without the use of additional supports. Examples of self-supporting specimen behavior include the ability to do the following without the use of additional supporting elements:

(1) Prior to and during the test, the specimen stays in its position to such an extent that it does not interfere with the effect of the burner flame.

(2) During the test, the specimen does not interrupt the progression of the flame front along the specimen. A specimen may still be considered self-supporting if it sags during the test or if debris falls from the specimen as long as this behavior does not interfere with the progress of the flame front.

3.2.2 *smoke developed index, n*—a number or classification indicating a comparative measure derived from smoke obscuration data collected during the test for surface burning characteristics.

3.2.3 *surface flame spread, n*—the propagation of a flame away from the source of ignition across the surface of the specimen.

4. Significance and Use

4.1 This test method is intended to provide only comparative measurements of surface flame spread and smoke density measurements with that of select grade red oak and fibercement board surfaces under the specific fire exposure conditions described herein.

4.2 This test method exposes a nominal 24-ft (7.32 m) long by 20-in. (508 mm) wide specimen to a controlled air flow and flaming fire exposure adjusted to spread the flame along the entire length of the select grade red oak specimen in 5 ½ min.

4.3 This test method does not provide for the following:

4.3.1 Measurement of heat transmission through the tested surface.

4.3.2 The effect of aggravated flame spread behavior of an assembly resulting from the proximity of combustible walls and ceilings.

4.3.3 Classifying or defining a material as noncombustible, by means of a flame spread index by itself.

5. Apparatus

5.1 *Fire Test Chamber*—See Figs. 1-5.

5.1.1 The fire test chamber is a rectangular horizontal duct with a removable lid. The inside dimensions are as follows:

Width:	17 ¾ in. ± ¼ in. (451 mm ± 6.3 mm) measured between the top ledges along the side walls, and 17 ⅝ in. ± ⅜ in. (448 mm ± 10 mm) at all other points.
Depth:	12 in. ± ½ in. (305 mm ± 13 mm) measured from the bottom of the test chamber to the top of the ledges on which the specimen is supported. This measurement includes the ⅛ in. (3.2 mm) thickness of the 1 ½ in. (38 mm) wide woven fiberglass gasket tape.
Length:	25 ft ± 3 in. (7.62 m ± 76 mm).

5.1.2 The sides and base of the chamber shall be lined with an insulating firebrick with the dimensions of 4 ½ in. by 9 in. by 2 ½ in. thick as illustrated in Fig. 2. The insulating firebrick shall have the following properties:

Maximum Recommended Temperature	2600 °F (1427 °C)	
Bulk Density	48 ± 3 lb/ft^3	(0.77 ± 0.046 g/cm^3)
Thermal Conductivity at Mean Temperature of	Btu•in./h•ft^2•°F	W/m•°C
500 °F (260 °C)	1.6	0.23
1000 °F (538 °C)	1.9	0.27
1500 °F (815 °C)	2.2	0.32
2000 °F (1093 °C)	2.6	0.37

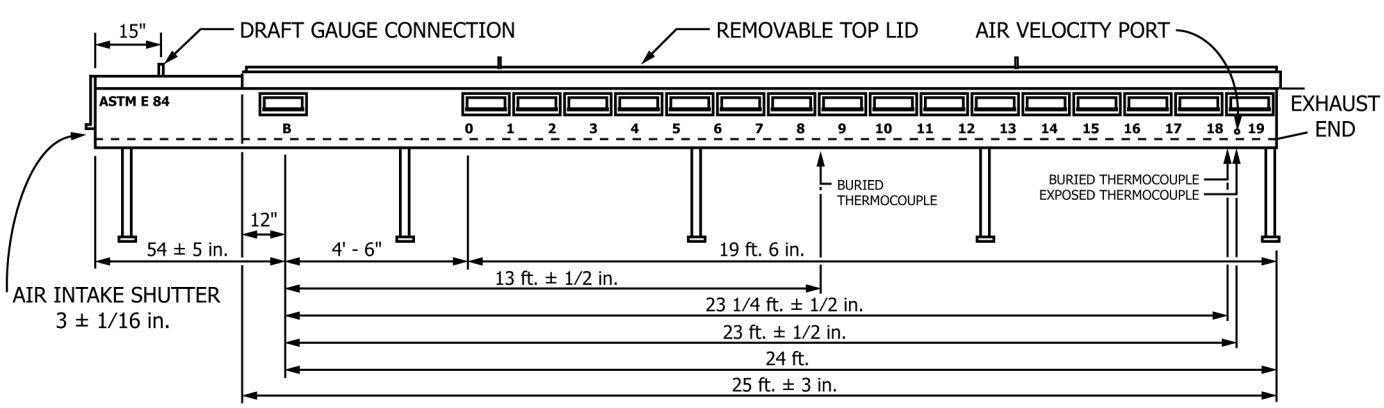

Inch–Pound Units	SI Units
3 ± 1/16 in.	76.2 ± 1.6 mm
12 in.	304.8 mm
15 in.	381 mm
54 ± 5 in.	1.37 m ± 127 mm
4 ft. 6 in.	1.37 m
19 ft. 6 in.	5.94 m
13 ft. ± 1/2 in.	3.96 m ± 12.7 mm
23 1/4 ft. ± 1/2 in.	7.1 m ± 12.7 mm
23 ft. ± 1/2 in.	7.0 m ± 12.7 mm
24 ft.	7.32 m
25 ft. ± 3 in.	7.62 m ± 76.2 mm

FIG. 1 Test Furnace, Showing Some Critical Dimensions (Not a Construction Drawing)

AVA Documents
Document Sharing Hub

Full document details: ASTM E84-23d

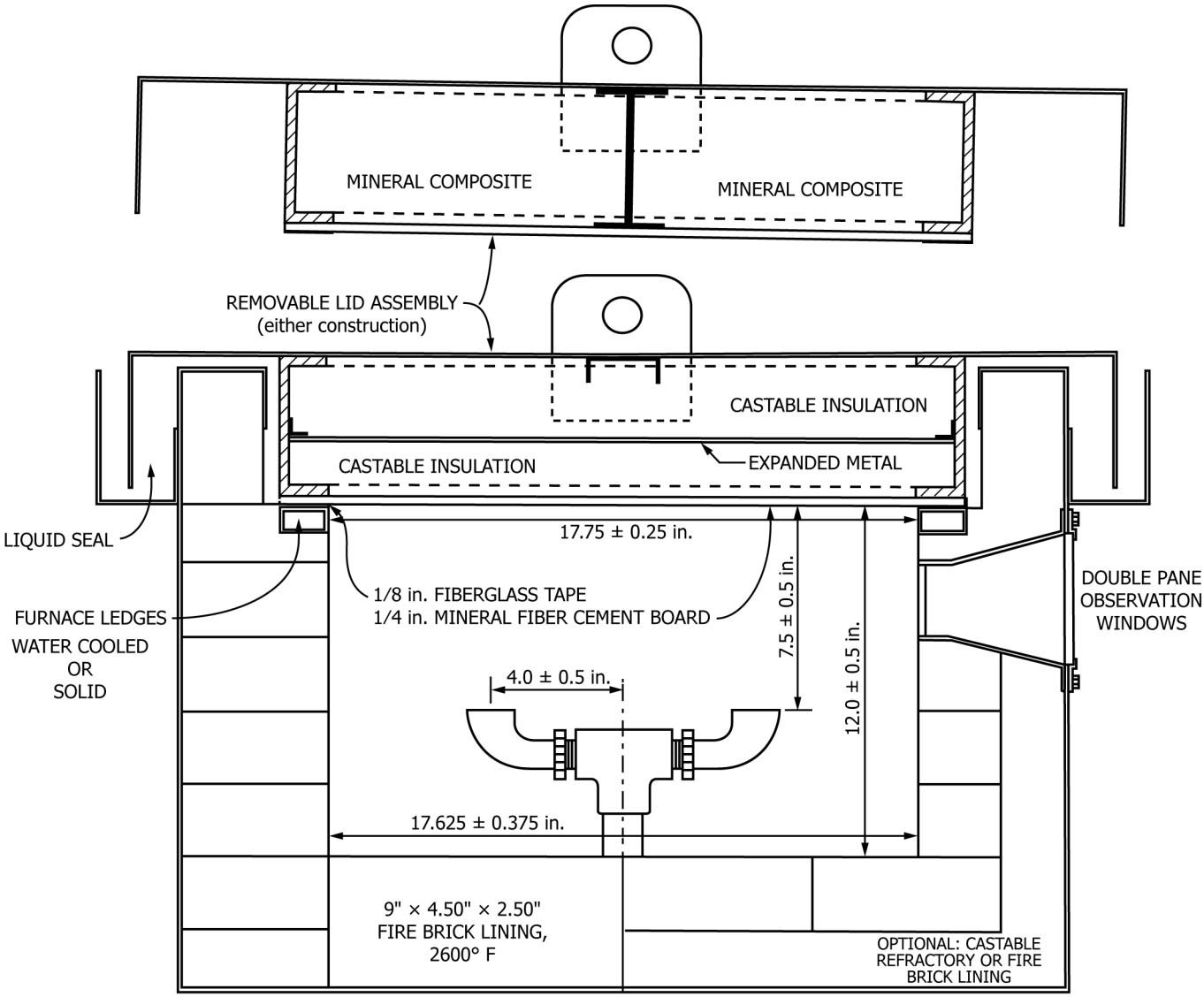

Inch–Pound Units	SI Units	Inch–Pound Units	SI Units	Inch–Pound Units	SI Units
4.0 ± 0.5 in.	102 ± 13 mm	17.625 ± 0.375 in.	447.7 ± 9.5 mm	9 in.	229 mm
7.5 ± 0.5 in.	191 ± 13 mm	2600° F	1427° C	4.5 in.	114 mm
12.0 ± 0.5 in.	305 ± 13 mm	1/8 in.	3.2 mm	2.5 in.	64 mm
17.75 ± 0.25 in.	451 ± 6.4 mm	1/4 in.	6.4 mm		

FIG. 2 Test Furnace Showing Critical Dimensions (Not a Construction Drawing)

5.1.3 One side of the chamber shall be provided with double observation windows[7] with the inside pane flush mounted (see Fig. 2). Exposed inside glass shall be 2 ¾ ± ⅜ by 11 + 1 – 2 in. (70 ± 10 by 279 + 25 – 50 mm). The centerline of the exposed area of the inside glass shall be in the upper half of the furnace wall, with the upper edge not less than 2.5 in. (63 mm) below the furnace ledge. The window shall be located such that not less than 12 in. (305 mm) of the specimen width can be observed. Multiple windows shall be located along the tunnel so that the entire length of the test sample is observable from outside the fire chamber. The windows shall be pressure tight in accordance with 7.2 and 7.2.1.

5.1.4 The ledges shall be fabricated of structural materials[8] capable of withstanding the abuse of continuous testing. The ledges shall be level with respect to the length and width of the chamber and each other. The ledges shall be maintained in a state of repair commensurate with the frequency, volume, and severity of testing occurring at any time.

5.1.5 *Lid:*

5.1.5.1 The lid shall consist of a removable noncombustible metal and mineral composite structure as shown in Fig. 2 and

[7] Heat-resistant glass, high-silica, 100 % silica glass, nominal ¼-in. thick has been found suitable for the interior pane. Borosilicate glass, nominal ¼-in. thick has been found suitable for the exterior pane.

[8] High-temperature furnace refractory. Zirconium silicate, or water-cooled steel tubing have been found suitable for this purpose.

AVA Documents
Document Sharing Hub

Full document details: ASTM E84-23d

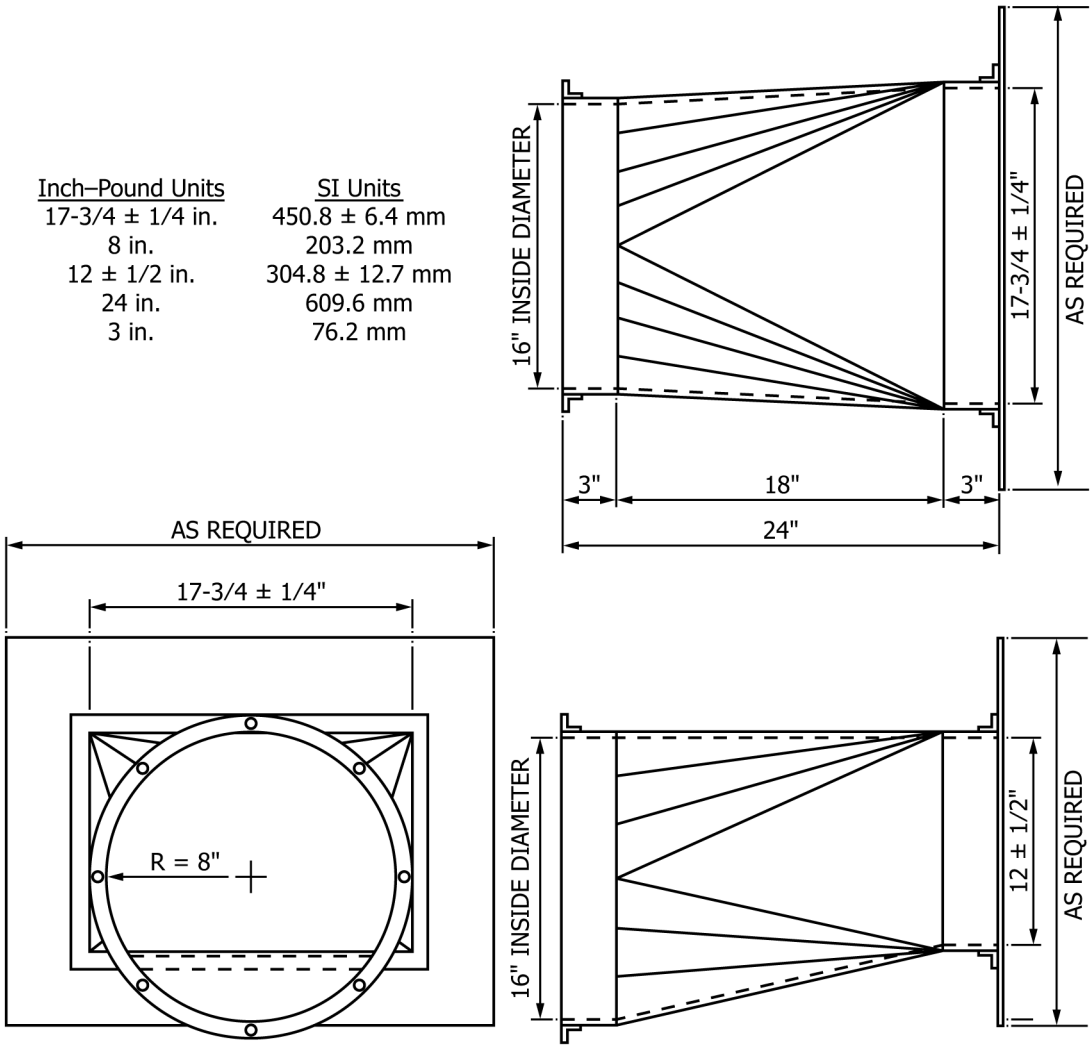

FIG. 3 Typical Exhaust End Transition (Not a Construction Drawing)

of a size necessary to cover completely the fire test chamber and the test samples. The lid shall be maintained in an unwarped and flat condition. When in place, the lid shall be completely sealed to prevent air leakage into the fire test chamber during the test.

5.1.5.2 The lid shall be insulated with a minimal thickness of 2 in. (51 mm) castable insulation or mineral composite material having physical characteristics comparable to the following:

Maximum effective use temperature of at least:	1200 °F (650 °C)
Bulk density	21 lb/ft^3 (336 kg/m^3)
Thermal conductivity at 300 °F to 700 °F (149 °C to 371 °C)	0.50 to 0.71 Btu·in./h·ft^2·°F (0.072 to 0.102 W/m·K)

5.1.5.3 The entire lid assembly shall be protected with flat sections of nominal ¼-in. (6.3 mm) fiber-cement board meeting the properties of Annex A3. This protective board shall be maintained in sound condition through continued replacement. The protective board is to be secured to the furnace lid or place on the back side of the test specimen.

5.1.6 *Gas Burners:*

5.1.6.1 One end of the test chamber shall be designated as the "fire end". This fire end shall be provided with two gas burners delivering flames upward against the surface of the test sample (see Fig. 2). The burners shall be spaced 12 in. (305 mm) from the fire end of the test chamber, and 7 ½ in. ± ½ in. (190 mm ± 13 mm) below the under surface of the test sample. Gas to the burners shall be provided through a single inlet pipe, distributed to each port burner through a tee-section. The outlet shall be a ¾ in. NPT elbow. The plane of the port shall be parallel to the furnace floor, such that the gas is directed upward toward the specimen. Each port shall be positioned with its centerline 4 in. ± ½ in. (102 mm ± 13 mm) on each side of the centerline of the furnace so that the flame is distributed evenly over the width of the exposed specimen surface (see Fig. 2).

5.1.6.2 The controls used to assure constant flow of gas to the burners during period of use shall consist of a pressure regulator, a gas meter constructed to read in increments of not more than 0.1 ft^3 (2.8 L), a manometer to indicate gas pressure in inches of water, a quick-acting gas shut-off valve, and a gas metering valve.

AVA Documents
Document Sharing Hub

Full document details: ASTM E84-23d

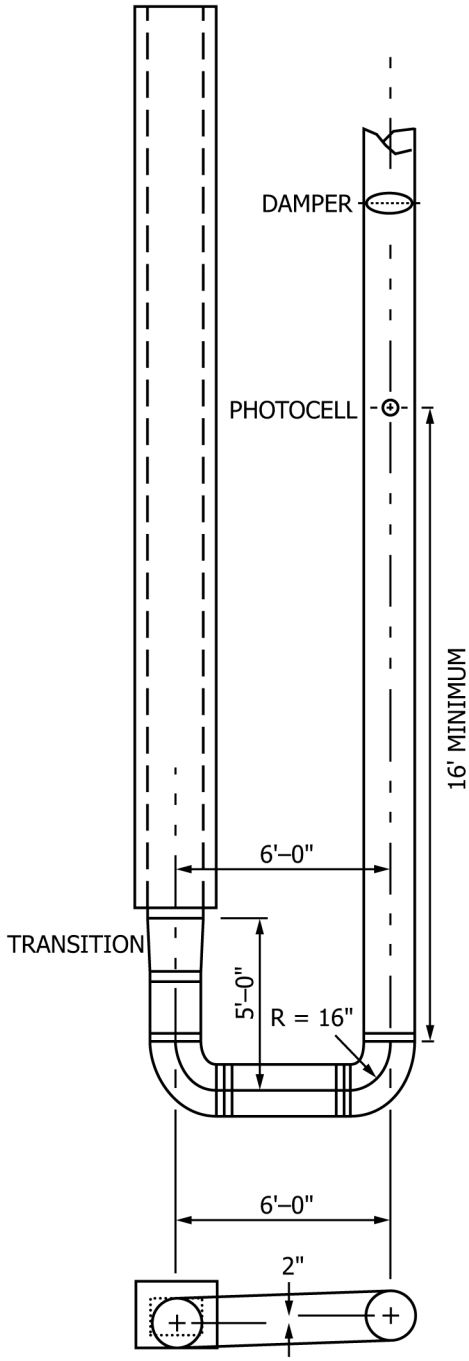

INCH-POUND UNITS	SI UNITS
16 in.	406.4 mm
2 in.	50.8 mm
5 ft.	1.52 m
6 ft.	1.83 m
16 - 40 ft.	4.88 - 12.2 m

FIG. 4 Plan View—Typical Duct System (Not a Construction Drawing)

5.1.7 *Air Intake:*

5.1.7.1 An air intake shutter shall be located 54 in. ± 5 in. (1372 mm ± 127 mm) upstream of the burner, as measured from the burner centerline to the outside surface of the shutter (see Fig. 1). The air intake is to be fitted with a vertically sliding shutter extending the entire width of the test chamber. The shutter shall be positioned so as to provide an air inlet port 3 in. ± 1/16 in. (76 mm ± 2 mm) high measured from the floor level of the test chamber at the air intake point.

5.1.7.2 To provide air turbulence for proper combustion, turbulence baffling shall be provided by positioning six refractory firebricks (as defined in 5.1.2) along the side walls of the chamber. With the long dimension vertical, 4 ½ in. (114 mm) dimension along the wall, place the bricks as follows from the centerline of the burner ports:

On the window side at 7, 12, and 20 ± ½ ft (2.1, 3.7, and 6.1 ± 0.2 m)
On the opposite side at 4 ½, 9 ½, and 16 ± ½ ft (1.3, 2.9, and 4.9 ± 0.2 m)

5.1.7.3 The movement of air shall be by an induced draft system having a total draft capacity of at least 0.15 in. (3.8 mm) water column with the sample in place, the shutter at the fire end open the normal 3 in. ± 1/16 in. (76 mm ± 2 mm), and the damper in the wide open position. A draft gauge tap to indicate static pressure shall be inserted through the top at the midwidth of the tunnel, 1 in. ± 0.5 in. (25 mm ± 12 mm) below the ceiling, 15 in. ± 0.5 in. (381 mm ± 12 mm) downstream from the inlet shutter (see Fig. 1).

5.1.8 *Exhaust End:*

5.1.8.1 The other end of the test chamber is designated as the exhaust end. The exhaust end shall be fitted with a gradual rectangular-to-round transition piece, not less than 20 in. (508 mm) in length, with a cross-sectional area of not less than 200 in.^{2} (1290 cm^2) at any point (see Fig. 3).

5.1.8.2 The transition piece shall in turn be fitted to a 16 in. (406 mm) diameter duct pipe. A typical duct system shown in Fig. 4 contains two 90° elbows (see Fig. 5) with the exhaust duct running beside the fire test chamber. In order to comply with this typical design, the vertical centerline of the exhaust duct system is identical to that of the fire test chamber.

5.1.8.3 The exhaust duct is to be insulated with at least 2 in. (51 mm) of high temperature mineral composition material from the exhaust end of the fire chamber to the photometer location.

5.1.8.4 An exhaust fan shall be installed at the end of the exhaust duct. The air flow shall be controlled as specified in 5.1.10.

5.1.8.5 An alternative exhaust duct layout design shall demonstrate equivalency by meeting the requirements specified in Section 7.

5.1.9 *Photometer System:*

5.1.9.1 A photometer system consisting of a white light source and photocell[9] shall be mounted on a horizontal section of the 16 in. (406 mm) diameter vent pipe at a point where it will be preceded by a straight run of pipe (at least 12 diameters or 16 ft (4.88 m) and not more than 30 diameters or 40 ft (12.19 m) from the vent end of the chamber, and with the light beam directed upward along the vertical axis of the vent pipe.

[9] The sole source of supply of the apparatus known to the committee at this time is a model No. 856RRV from Huygen Corp., Crystal Lake, IL. If you are aware of alternative suppliers, please provide this information to ASTM Headquarters. Your comments will receive careful consideration at a meeting of the responsible technical committee,[1] which you may attend.

AVA Documents
Document Sharing Hub

Full document details: ASTM E84-23d

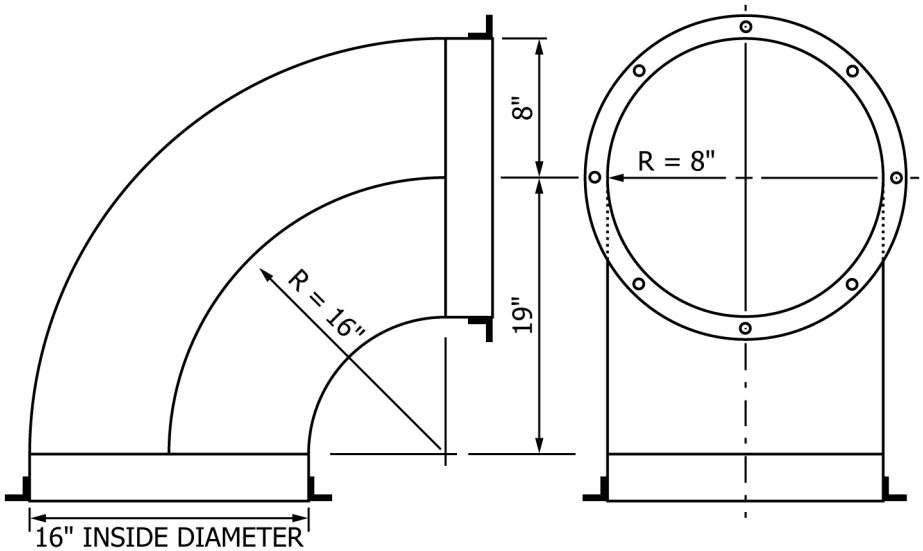

Inch–Pound Units	SI Units
16 in.	406.4 mm
8 in.	203.2 mm
19 in.	482.6 mm

FIG. 5 Typical Duct Elbow (Not a Construction Drawing)

The vent pipe shall be insulated with at least 2 in. (51 mm) of high-temperature mineral composition material, from the vent end of the chamber to the photometer location. The output of the photoelectric cell is proportional to the smoke, particulate, and other effluent passing between the light source and photocell. The distance between the light source lens and the photocell lens shall be 36 in. ± 4 in. (914 mm ± 102 mm). The cylindrical light beam shall pass through 3 in. (76 mm) diameter openings at the top and bottom of the 16-in. diameter duct, with the resultant light beam centered on the photocell.

5.1.9.2 Linearity of the photometer system shall be verified periodically by interrupting the light beam with calibrated neutral density filters. The filters shall cover the full range of the recording instrument. Transmittance values measured by the photometer, using neutral density filters, shall be within ±3 % of the calibrated value for each filter.

5.1.10 *Draft Regulating Device:*

5.1.10.1 An automatically controlled damper to regulate the draft pressure shall be installed in the vent pipe down-stream of the smoke-indicating attachment. The damper shall be provided with a manual override.

5.1.10.2 Other manual or automatic draft regulation devices, or both, are allowed to be incorporated to help maintain fan characterization and air-flow control throughout the test.

5.1.11 *Thermocouples:*

5.1.11.1 A No. 18 Awg (1.02 mm) thermocouple, with ⅜ in. ± ⅛ in. (9.5 mm ± 3.2 mm) of the junction exposed in the air, shall be inserted through the floor of the test chamber so that the tip is 1 in. ± 1/32 in. (25.4 mm ± 0.8 mm) below the top surface of the gasketing tape and 23 ft ± ½ in. (7.0 m ± 13 mm) from the centerline of the burner ports at the center of its width.

5.1.11.2 Two No. 18 Awg (1.02 mm) thermocouples are embedded below the floor surface of the test chamber. These thermocouples shall be mounted at distances of 13 ft ± ½ in. (3.96 m ± 13 mm) and 23 ¼ ft ± ½ in. (7.09 m ± 13 mm) measured from the centerline of the burner ports. The thermocouples shall be inserted from below the fire test chamber through the firebrick until the tip of the thermocouple is ⅛ in. ± 1/32 in. (3.2 mm ± 0.8 mm) below the floor surface. The tip of the thermocouples shall be covered with refractory or portland cement, carefully dried to avoid cracking.

6. Test Specimens

6.1 Specimens shall be representative of the materials which the test is intended to examine. The report shall include information on the composition needed for identification of the test specimen as described in 11.1.1.

6.2 The specimen shall be provided in one of two ways: (*1*) a continuous, unbroken length; (*2*) sections that will be joined or butted end-to-end.

6.3 The size of the test specimen shall be:

Width: between 20 in. and 24 in. (508 mm and 610 mm),

Length: 24 ft + 12 in. – 6 in., and

Thickness: maximum 4 in. (101 mm).

NOTE 2—The test apparatus is not designed for testing at thicknesses greater than 4 in. (101 mm), but has the ability to be modified if required. This is accomplished through *(a)* modifications to the test apparatus lid to maintain an airtight seal, and *(b)* the introduction, usually of additional sample/lid supports above the test apparatus ledges. Due to the composition of some materials, test results obtained at a thickness greater than 4 in. (101 mm) will potentially vary from results of a test on the same material tested at a thickness of 4 in. (101 mm) or less.

AVA Documents
Document Sharing Hub

Full document details: ASTM E84-23d

6.3.1 The test specimen shall be required to conform to the test specimen length and width described in 6.3 unless the material complies with any one of the requirements in 6.3.1.1 – 6.3.1.3.

NOTE 3—When tests are conducted with materials installed at less than full width, representing the end-use width, any resulting flame spread and smoke developed indices will not relate to indices obtained with the calibration material, which is tested using the specimen width described in 6.3.

6.3.1.1 Materials for which there is a standard practice to address specimen preparation and mounting with this test method shall be tested as described in the appropriate standard practice (see 6.8).

6.3.1.2 Adhesives, tapes, and trim shall be permitted to be tested in the width or length, or both, specified in their listings, or as part of their conditions for being labeled, by a nationally recognized testing laboratory.

6.3.1.3 Materials and products for which there is a specific test method or application standard requiring the use of the apparatus described in Section 5 shall be permitted to be tested in accordance with that specific test method or application standard (see 1.2 – 1.2.5).

6.4 The test specimen shall be conditioned to a constant weight at a temperature of 73.4 °F ± 5 °F (23 °C ± 2.8 °C) and at a relative humidity of 50 % ± 5 %.

6.5 The upstream end of the fire test chamber shall be filled with a 14 in. ± ⅛ in. (356 mm ± 3 mm) length of uncoated 16 gauge (0.053 in. to 0.060 in.) steel plate positioned on the specimen mounting ledge in front of and under the leading edge of the specimen.

6.6 When the overall length of the test specimen exceeds 24 ft (7.32 m), butt one end of the test specimen against the exhaust end of the fire test chamber and continue the installation of the specimen toward the gas burner.

6.7 When the overall length of the test specimen is 24 ft (7.32 m) or less, provide a 1 in. (25 mm) overlap of the steel plate at the upstream end with one end of the test specimen and continue the installation of the specimen toward the exhaust end.

6.8 In addition to the above provisions, the standard practices listed below shall be used for specimen preparation and mounting of the relevant test materials.

E2231 for pipe and duct insulation materials.

E2404 for paper, polymeric (including vinyl and expanded vinyl) and textile wall and ceiling covering materials, facings or wood veneers intended to be applied on site over a wood substrate.

E2573 for site-fabricated stretch systems.

E2579 for wood products as well as for laminated products factory-produced with a wood substrate.

E2599 for reflective insulation, radiant barrier and vinyl stretch ceiling materials for building applications.

E2688 for tapes.

E2690 for caulks or sealants.

E2988 for flexible fibrous glass insulation for metal buildings.

E3202 for plastic composites for use as deck boards, stair treads, guards or handrails.

E3287 for fenestration profiles intended to support non-combustible in-fill materials.

6.8.1 Section 11.1.3.3 requires the reporting of the mounting method employed, including additional information required to be reported by the applicable specimen preparation and mounting practice referenced in this section.

6.9 Annexes address the optional use of fiber cement and of metal support pieces in this test method. They also address mounting methods for some specific materials or products. Test specimens that sag and interfere with the progression of the flame front are to use metal supports in accordance with Annex A4.

6.10 Appendix X1 provides guidance on mounting methods for materials or products not covered by the standard practices in 6.8 or any of the annexes.

7. Calibration

7.1 Place a nominal ¼ in. (6.3 mm) fiber-cement board meeting the properties of Annex A3 on the ledge of the furnace chamber. Place the removable lid of the test chamber in position.

7.2 With the ¼ in. (6.3 mm) fiber-cement board in position on top of the ledge of the furnace chamber and with the removable lid in place, establish a draft to produce a 0.15 in. (3.8 mm) water-column reading on the draft manometer, with the fire-end shutter open 3 in. ± 1⁄16 in. (76 mm ± 1.6 mm), by manually setting the damper as a characterization of fan performance. Then close and seal the fire-end shutter, without changing the damper position. The manometer reading shall increase to at least 0.375 in. (9.53 mm), indicating that no excessive air leakage exists.

7.2.1 In addition, conduct a supplemental leakage test periodically with the tunnel sealed from the inlet end to beyond the photometer system, by placing a smoke bomb in the chamber. Ignite the bomb and pressurize the chamber to 0.375 in. ± 0.125 in. (9.53 mm ± 3.18 mm) water column. Seal all points of leakage observed in the form of escaping smoke particles.

7.3 Establish a draft reading within the range 0.055 in. to 0.100 in. (1.40 mm to 2.54 mm) water column. The required draft gauge reading will be maintained throughout the test by the automatically controlled damper. Record the air velocity at seven points, 23 ft from the centerline of the burner ports, 6 in. ± ¼ in. (168 mm ± 7 mm) below the plane of the specimen mounting ledge. Determine these seven points by dividing the width of the tunnel into seven equal sections and recording the velocity at the geometrical center of each section. During the measurement of velocity, remove the turbulence bricks (see 4.3) and the exposed 23-ft thermocouple and place 24 in. (670 mm) long straightening vanes between 16 ft and 18 ft (4.88 m and 5.49 m) from the burner. The straightening vanes shall divide the furnace cross section into nine uniform sections. Determine the velocity with furnace air temperature at 73.4 °F ± 5 °F (23 °C ± 2.8 °C), using a velocity transducer. The velocity, determined as the arithmetic average of the seven readings, shall be 240 ft ± 5 ft (73.2 m ± 1.4 m) per

AVA Documents
Document Sharing Hub

Full document details: ASTM E84-23d

7.3.1 The following alternative to the velocity transducer equipment and method of determining the tunnel air velocity has been found suitable: A 4-in. diameter low-speed rotary vane anemometer, having a resolution of 1 ft/min. with an accuracy of ±2 %, is attached to the steel stand and placed in the tunnel 22.5 ft downstream of the burners. Three trials shall be conducted and their values averaged. The average is rounded to the nearest unit. The centerline of the vane anemometer shall be aligned with the vertical centerline of the tunnel by placing it on the steel stand. Trial 1 is run with the vane edge 1 in. from the non-window wall; Trial 2 is with the center axis at the tunnel center point; and Trial 3 is run with the vane edge 1 in. from the window wall.

7.4 The room in which the test chamber is located shall have provision for a free inflow of air during test to maintain the room at atmospheric pressure during the entire test run. Maintain the air supply at a temperature of 65 °F to 80 °F (18.3 °C to 26.7 °C) and a relative humidity of 45 % to 60 %.

7.5 Supply the fire test chamber with natural (city) or methane (bottled) gas fuel of uniform quality with a heating value of nominally 1000 Btu/ft^3 (37.3 MJ/m^3). Adjust the gas supply initially at approximately 5000 Btu (5.3 MJ)/min. Record the gas pressure, the pressure differential across the orifice plate, and the volume of gas used in each test. If a temperature- and pressure-compensating mass flowmeter is utilized, record only the volume of gas used. Unless otherwise corrected for, when bottled methane is employed, insert a length of coiled copper tubing into the gas line between the supply and metering connection to compensate for possible errors in the flow indicated due to reductions in gas temperature associated with the pressure drop and expansion across the regulator. With the draft and gas supply adjusted as indicated in 7.3 and 7.4, the test flame shall extend downstream to a distance of 4 ½ ft (1.37 m) over the specimen surface, with negligible upstream coverage.

7.6 Preheat the test chamber with the ¼ in. (6.3 mm) fiber-cement board and the removable lid in place and with the fuel supply adjusted to the required flow. Continue the preheating until the temperature indicated by the floor thermocouple at 23 ¼ ft (7.09 m) reaches 150 °F ± 5 °F (66 °C ± 2.8 °C). During the preheat test, record the temperatures indicated by the thermocouple at the vent end of the test chamber at intervals not longer than 15 s.

7.6.1 Compare the temperature readings during the preheat test in 7.6 with those in the time-temperature curve in Fig. 6. If they are different investigate the differences and make adjustments as necessary, while maintaining calibration requirements.

7.7 Allow the furnace to cool after each test. When the floor thermocouple at 13 ft (3.96 m) shows a temperature of 105 °F ± 5 °F (40.5 °C ± 2.8 °C), place the next specimen in position for test.

7.8 With the test equipment adjusted and conditioned as described in 7.2, 7.3, 7.4, and 7.6, make a test or series of tests, using nominal 23⁄32-in. (18 mm) select-grade red oak flooring samples and samples of ¼-in. (6 mm) fiber-cement board. Conduct these tests in either order.

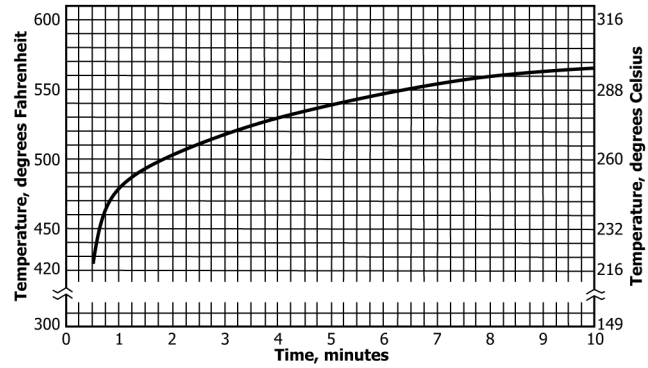

FIG. 6 Representative Time-Temperature Curve for Preheat Temperatures

7.8.1 The red oak decks are to be constructed and conditioned as specified in Annex A1 and Annex A2. Make observations at distance intervals not in excess of 2 ft (0.6 m) and time intervals not in excess of 30 s, and record the time when the flame reaches the end of the specimen 19 ½ ft (5.94 m) from the end of the ignition fire. The end of the ignition fire shall be considered as being 4 ½ ft (1.4 m) from the burners. The flame shall reach the end point in 5 ½ min ± 15 s. Automatically record the temperature measured by the exposed thermocouple at 23 ft (7.0 m) at least every 15 s. Automatically record the photoelectric cell output immediately prior to the test and at least every 15 s during the test.

7.8.2 Another means of judging when the flame has reached the end point is when the exposed thermocouple at 23 ft (7.0 m) registers a temperature of 980 °F (527 °C).

7.9 Plot the flame spread distance and temperature, for the duration of the test. Fig. 7 and Fig. 8 are representative curves for red oak flame spread distance and time-temperature development, respectively. Flame spread distance shall be determined as the observed distance minus 4 ½ ft (1.37 m).

7.10 Conduct a similar test or tests on samples of ¼ in. (6 mm) fiber-cement board. These results shall be considered as representing an index of 0. Plot the temperature readings for

FIG. 7 Representative Time-Distance Curve for Flame Spread of Red Oak

AVA Documents
Document Sharing Hub

Full document details: ASTM E84-23d