This international standard was developed in accordance with internationally recognized principles on standardization established in the Decision on Principles for the Development of International Standards, Guides and Recommendations issued by the World Trade Organization Technical Barriers to Trade (TBT) Committee.

Designation: F1005 – 91 (Reapproved 2019)

An American National Standard

Standard Practice for HVAC Duct Shapes; Identification and Description of Design Configuration[1]

This standard is issued under the fixed designation F1005; the number immediately following the designation indicates the year of original adoption or, in the case of revision, the year of last revision. A number in parentheses indicates the year of last reapproval. A superscript epsilon (ε) indicates an editorial change since the last revision or reapproval.

1. Scope

1.1 This practice covers the identification of design configurations and descriptive nomenclature for sheetmetal HVAC ductwork shapes frequently used in shipbuilding. This practice also covers parametric dimensions of these shapes. (See Table 1.)

1.2 This practice does not cover the location of seams or joints within a shape or the method of joining shapes together.

1.3 Since this practice is not measurement sensitive, it is applicable whether inch-pound or SI metric dimensions are used.

1.4 *This standard does not purport to address all of the safety concerns, if any, associated with its use. It is the responsibility of the user of this standard to establish appropriate safety, health, and environmental practices and determine the applicability of regulatory limitations prior to use.*

1.5 *This international standard was developed in accordance with internationally recognized principles on standardization established in the Decision on Principles for the Development of International Standards, Guides and Recommendations issued by the World Trade Organization Technical Barriers to Trade (TBT) Committee.*

2. Terminology

2.1 *Definitions of Terms Specific to This Standard:*

2.1.1 *branch, n*—portion of a duct system connection to a main duct.

2.1.2 *elbow, n*—a fitting used to change direction of air flow.

2.1.3 *flat oval, n*—cross section that has flat sides and semicircular ends.

2.1.4 *long axis of flat oval, n*—curved so that the flat sides of the flat oval remain in a plane.

2.1.5 *offset, n*—fitting that changes the location of the duct with the line of the duct remaining parallel.

2.1.6 *ogee, n*—a smoothly curved type of offset. The inside curve of each end is tangent to the outside curve of the other end.

2.1.7 *radius corner, n*—cross section that is generally rectangular, but with the corners softened to a radius.

2.1.8 *rectangular, n*—rectangular or square cross section.

2.1.9 *reducer, n*—a fitting that changes the size but not the cross-section type of duct.

2.1.10 *round, n*—circular cross section.

2.1.11 *short axis of flat oval, n*—curved so that the flat sides of the flat oval correspond to the curve.

2.1.12 *splitter, n*—internal part of some elbows and offsets; sometimes required in diverging transitions. Used to provide more uniform velocity and distribution of air flow. The number and location of splitters is determined by calculation or from a nomograph.

2.1.13 *straight, n*—duct that remains constant in cross section and size throughout its length.

2.1.14 *throat, n*—wrapper around the inside of a fitting.

2.1.15 *transition, n*—fitting that changes the cross-section type of the duct.

2.1.16 *vane, n*—internal part of vaned turns. Used to provide more uniform velocity of air flow. Configuration, number, and location of vanes is determined from drawing, NAVSHIPS No. S3801-385260.[2] The direction of airflow must be marked on vaned turns.

2.1.17 *vaned turn, n*—a fitting containing vanes that is used to change the direction of air flow.

2.2 *Variables Specific to This Standard:*

A—Angle. Included angle of an elbow, branch, vaned turn, or slant-top fitting.

AI—Air In indicates the length of the straight portion of a vaned turn in the "air in-flow" side.

[1] This practice is under the jurisdiction of ASTM Committee F25 on Ships and Marine Technology and is the direct responsibility of Subcommittee F25.11 on Machinery and Piping Systems.

Current edition approved Dec. 1, 2019. Published January 2020. Originally approved in 1986. Last previous edition approved in 2013 as F1005 – 91 (2013). DOI: 10.1520/F1005-91R19.

[2] Drawing: Naval Sea Systems Command (NAVSEA) NAVSHIPS S3801-385260 Vanes Channels Ventilation Vane, available from Commander, Portsmouth Naval Shipyard, Naval Engineering Drawing Support Activity, Code 202.2, Portsmouth, NH 03804-5000.

Copyright © ASTM International, 100 Barr Harbor Drive, PO Box C700, West Conshohocken, PA 19428-2959. United States

Documents
Document Sharing Hub

Full document details: ASTM F1005-91(2019)

TABLE 1 HVAC Standard Nomenclature and Numbering System

1. *Straight:*
1.1 Straight-round
1.2 Straight-flat oval
1.3 Straight-rectangular
2. *Offset:*
2.1 Offset-round
2.2.1 Offset-flat oval-long axis
2.2.2 Offset-flat oval-short axis
2.3.1 Offset-rectangular-without splitters
2.3.2 Offset-rectangular-with splitters
2.4.1 Offset-ogee-without splitters
2.4.2 Offset-ogee-with splitters
2.5.1 Offset-rectangular reducing-without splitters
2.5.2 Offset-rectangular reducing-with splitters
3. *Elbow:*
3.1 Elbow-round
3.2.1 Elbow-flat oval-long axis
3.2.2 Elbow-flat oval-short axis
3.3.1 Elbow-rectangular-without splitters
3.3.2 Elbow-rectangular-with splitters
3.4.1 Elbow-rectangular reducing-without splitters
3.4.2 Elbow-rectangular reducing-with splitters
3.5.1 Elbow-rectangular transition-without splitters
3.5.2 Elbow-rectangular transition-with splitters
4. *Vaned Turn:*
4.1 Vaned turn
5. *Reducer:*
5.1 Reducer-round
5.2 Reducer-flat oval
5.3 Reducer-rectangular
6. *Transition and Bellmouth:*
6.1 Transition-flat oval to round
6.2 Transition-rectangular to round
6.3 Transition-rectangular to flat oval
6.4 Transition-rectangular to radius corner
6.5 Transition-radius corner to flat oval
6.6.1 Bellmouth-round
6.6.2 Bellmouth-rectangular
7. *Branch:*
7.1.1 Branch-round-on equal diameter round
7.1.2 Branch-round-on larger diameter round
7.1.3 Branch-round-on round reducer
7.1.4 Branch-round-on rectangular straight
7.1.5 Branch-round-on rectangular reducer
7.1.6 Branch-round "Y"
7.1.7 Branch-rectangular to round-"Y"
7.2.1 Branch-rectangular-on rectangular straight
7.2.2 Branch-rectangular-on rectangular reducer

AO—Air Out indicates the length of the straight portion of a vaned turn on the "air out-flow" side.

B—Distance from the intersection of the center lines of a branch and the main duct to the end of the main duct.

CY—Distance between centers of a Y branch.

D—Depth of a part.

DB—Depth of a branch.

DIA—Diameter of a part.

DIAB—Diameter of a branch.

DIA1—Major diameter of a part.

DIA2—Minor diameter of a part.

D1—Major depth of a part.

D2—Minor depth of a part.

F—Flat section that softens the corner of a vaned turn.

L—Length of a part.

LB—Length of a branch from the end of the branch to the point where the centerline of the branch intersects the centerline of the main duct.

1.1—Major length of a Y branch.

1.2—Minor length of a Y branch.

O—Offset in one direction.

R—Radius of a bellmouth.

RC—Radius corner.

RV1—Radius of first splitter at V extension.

RV2—Radius of second splitter at V extension.

RV3—Radius of third splitter at V extension.

RZ1—Radius of first splitter at Z extension.

RZ2—Radius of second splitter at Z extension.

RZ3—Radius of third splitter at Z extension.

R1—Radius of first splitter.

R2—Radius of second splitter.

R3—Radius of third splitter.

S1—Distance of first splitter from the outside curve of an ogee offset.

S2—Distance of second splitter from the outside curve of an ogee offset.

S3—Distance of third splitter from the outside curve of an ogee offset.

TR—Throat radius is the radius of the inside surface of an elbow or offset. Normally TR is equal to the width (of a rectangular elbow).

TR1—Major throat radius of a reducing offset.

TR2—Minor throat radius of a reducing offset.

V—Extension on one end of a part, opposite from Z.

W—Width of a part.

WB—Width of a branch.

W1—Major width of a part.

W2—Minor width of a part.

X+—Offset of a transition or reducer toward the right along the *X* axis, looking down from above.

X−—Offset of a transition or reducer toward the left along the *X* axis, looking down from above.

Y+—Offset of a transition or reducer toward the top of the *Y* axis, looking down from above.

Y−—Offset of a transition or reducer toward the bottom of the *Y* axis, looking down from above.

Z—Extension on one end of a part, opposite from *V*.

3. Significance and Use

3.1 Standard nomenclature shall be used to facilitate communication between designers, suppliers, and users of HVAC ventilation ductwork components.

3.2 Standard design parameters shall be used to define ventilation ductwork shapes.

3.3 Standard variables for design parameters (see 2.2) are useful in writing CAD/CAM software for automatic fabrication of ventilation ductwork shapes.

4. Description of HVAC Standard Shapes

4.1 The HVAC standard shapes covered by this practice are described by Figs. 1-41. The shapes have been divided into seven categories by function.

4.1.1 *HVAC Duct Categories:*

4.1.1.1 Straight.

4.1.1.2 Offset.

4.1.1.3 Elbow.

AVA Documents
Document Sharing Hub

Full document details: ASTM F1005-91(2019)

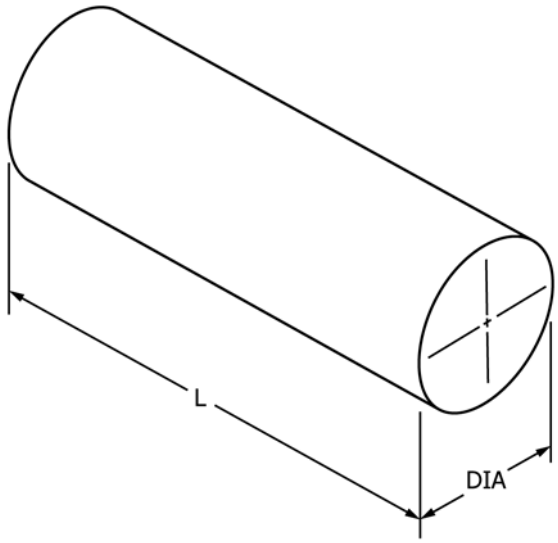

FIG. 1 Shape 1.1—Straight-Round

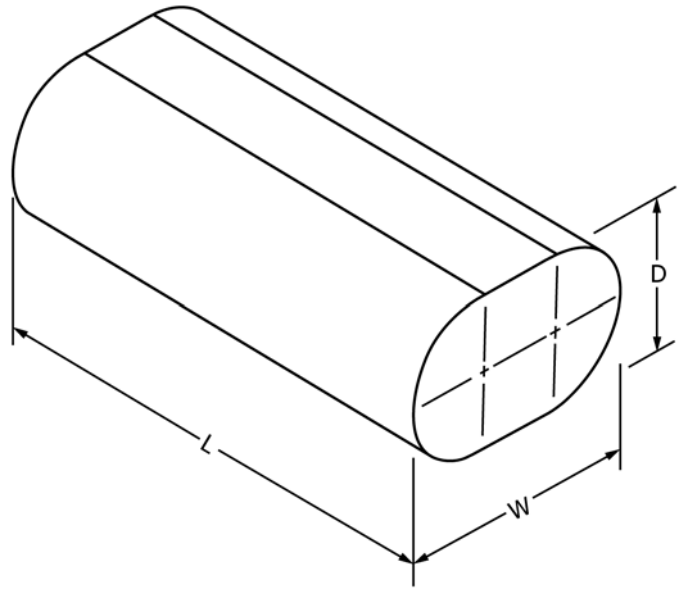

FIG. 2 Shape 1.2—Straight-Flat Oval.

4.1.1.4 Vaned turn.

4.1.1.5 Reducer.

4.1.1.6 Transition and bellmouth.

4.1.1.7 Branch.

4.1.2 Each sketch is identified by the standard name and indicates the design parameters needed for fabrication.

4.2 The HVAC standard shapes are also identified by number for convenient reference. A modified decimal numbering system is used for this purpose.

4.2.1 *Primary Number*—The primary numbers 1 through 7 correspond to the seven categories of shapes.

4.2.2 *Secondary Number*—The secondary number designates a predominant characteristic, such as cross section that differentiates a shape from other shapes in the category.

4.2.3 *Ternary Number*—The ternary number, when required, is used when further differentiation is required. A summary of this system is presented in Table 1.

5. Keywords

5.1 air conditioning; heating; HVAC duct configuration; HVAC ducts; HVAC duct shapes; ventilation

Documents
Document Sharing Hub
Full document details: ASTM F1005-91(2019)

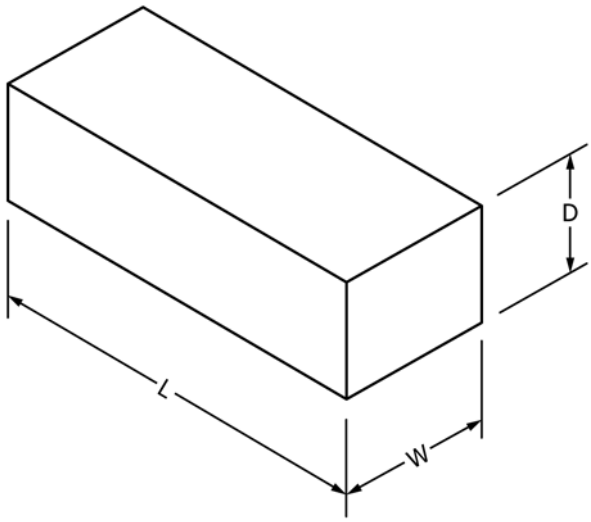

FIG. 3 Shape 1.3—Straight-Rectangular

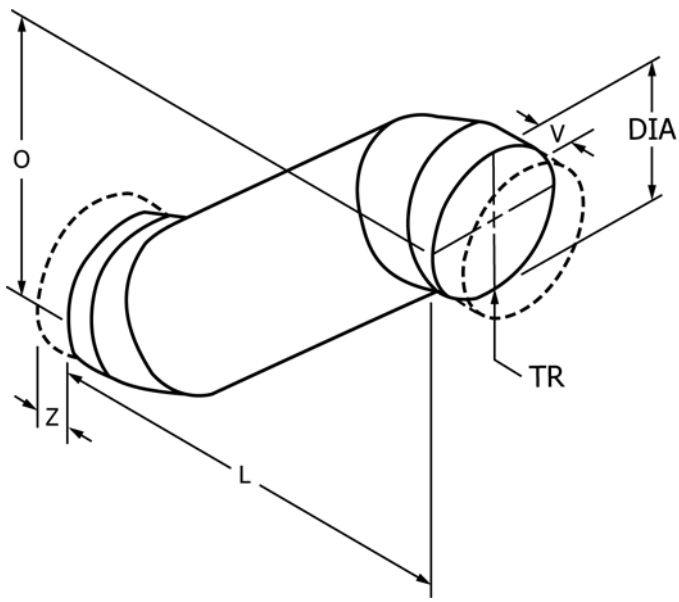

FIG. 4 Shape 2.1—Offset-Round

Documents
Document Sharing Hub
Full document details: ASTM F1005-91(2019)

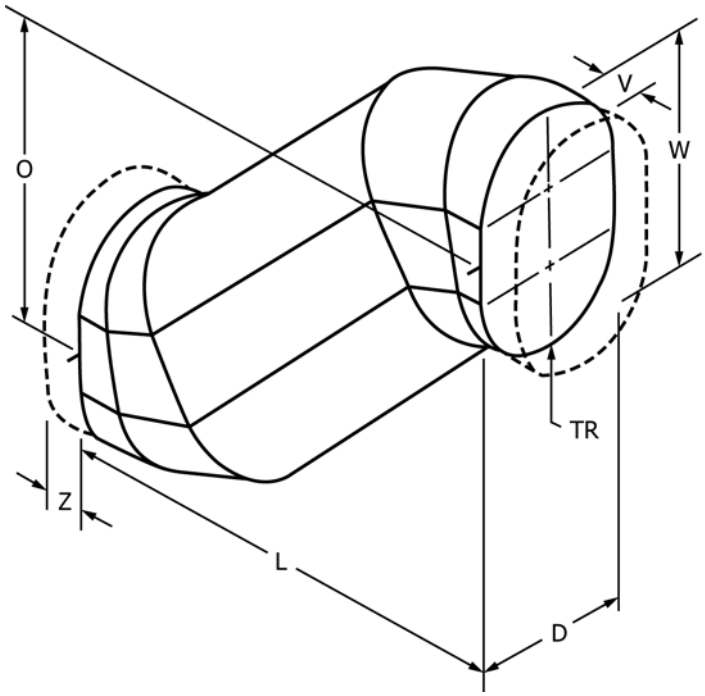

FIG. 5 Shape 2.2.1—Offset-Flat Oval-Long Axis

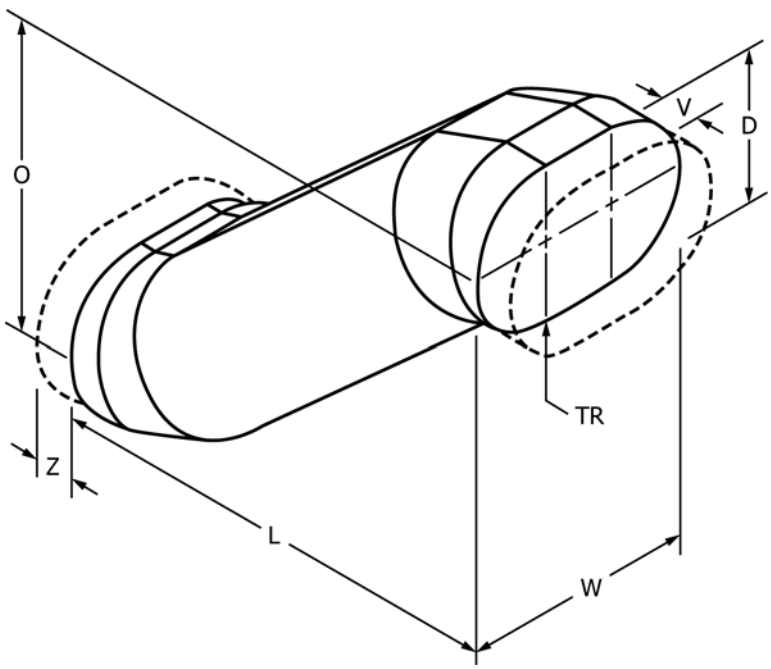

FIG. 6 Shape 2.2.2—Offset-Flat Oval-Short Axis

Documents
Document Sharing Hub

Full document details: ASTM F1005-91(2019)

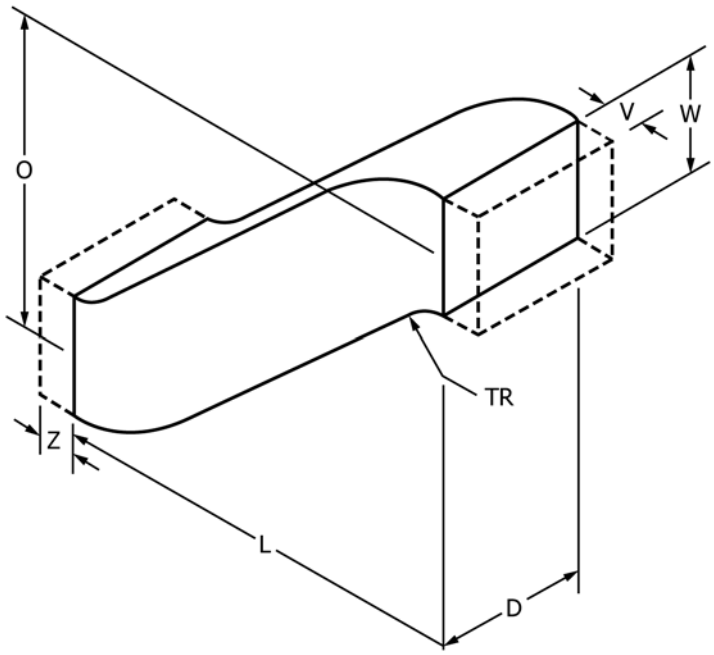

FIG. 7 Shape 2.3.1—Offset-Rectangular-Without Splitters

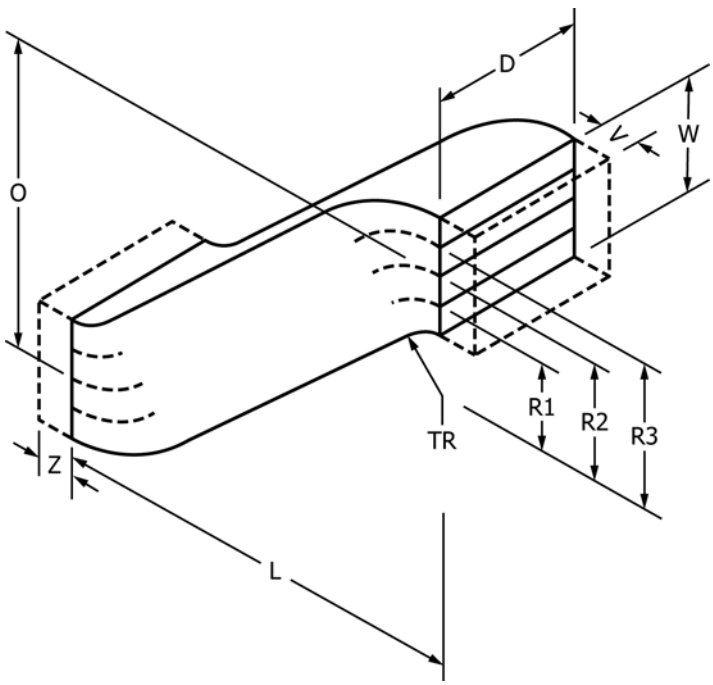

FIG. 8 Shape 2.3.2—Offset-Rectangular-With Splitters

Documents
Document Sharing Hub

Full document details: ASTM F1005-91(2019)