NOTICE: This standard has either been superseded and replaced by a new version or withdrawn.
Contact ASTM International (www.astm.org) for the latest information

Designation: F1027 – 86(Reapproved 2007)

Standard Practice for Assessment of Tissue and Cell Compatibility of Orofacial Prosthetic Materials and Devices[1]

This standard is issued under the fixed designation F1027; the number immediately following the designation indicates the year of original adoption or, in the case of revision, the year of last revision. A number in parentheses indicates the year of last reapproval. A superscript epsilon (ε) indicates an editorial change since the last revision or reapproval.

1. Scope

1.1 This practice describes a procedure to assess the cytotoxic potential of materials for use in the construction of medical materials and devices using human excised donor (HED) tissues and their derived primary cells taken from the orofacial region.

1.2 This practice may be used either directly to evaluate materials or as a reference against which other cytotoxicity methods may be compared.

1.3 This practice is one of a series of reference methods for assessment of cytotoxic potential, employing different techniques.

1.4 Assessment of cytotoxicity is one of several procedures employed in determining the biological response to a material, as recommended in Practice F748.

1.5 *This standard does not purport to address all of the safety concerns, if any, associated with its use. It is the responsibility of the user of this standard to establish appropriate safety and health practices and determine the applicability of regulatory limitations prior to use.*

2. Referenced Documents

2.1 *ASTM Standards:*[2]

D883 Terminology Relating to Plastics

F604 Specification for Silicone Elastomers Used in Medical Applications (Withdrawn 2001)[3]

F703 Specification for Implantable Breast Prostheses

F748 Practice for Selecting Generic Biological Test Methods for Materials and Devices

F813 Practice for Direct Contact Cell Culture Evaluation of Materials for Medical Devices

3. Terminology

3.1 Nomenclature relating to the physical, mechanical, and chemical characteristics of plastics shall be in accordance with Terminology D883.

3.2 The nomenclature and glossary of terms related to tissue culturing shall conform to that of the Tissue Culture Association (**1**).[4]

3.3 For other definitions used in this practice, see Annex A1.

4. Summary of Practice

4.1 Primary human orofacial tissue or cells and established human cell lines are cultured in Medium A3 or any medium supporting primary cell growth with homologous processed human serum or serum components in cell culture flasks or appropriate containers. The following series of cultures is set up:

4.1.1 Test material placed in contact with the cell layer.

NOTE 1—One or more replicates of 4.1.1 may be necessary.

4.1.2 Primary control wherein no material contacts the cell layer.

4.1.3 Positive control wherein the cell layer is contacted by a material eliciting a known cytotoxic response, such as a toxic chemical published in the Toxic Substances List (**2**).

4.1.4 Negative control wherein the cell layer is contacted by polystyrene used in tissue culture labware.

4.2 The test culture shall be observed daily for growth and signs of toxicity. The test shall be terminated upon the attainment of confluency.

NOTE 2—For an established cell line cultured with Holmes alpha growth factor (AGF), confluency is usually achieved in slightly more than 5 days.

NOTE 3—For first passage cells from HED cultures, confluency is usually achieved between 10 to 20 days with an upper limit of 30 days.

[1] This practice is under the jurisdiction of ASTM Committee F04 on Medical and Surgical Materials and Devicesand is the direct responsibility of Subcommittee F04.16 on Biocompatibility Test Methods.

Current edition approved Feb. 1, 2007. Published February 2007. Originally approved in 1986. Last previous edition approved in 2002 as F1027 – 86 (2002). DOI: 10.1520/F1027-86R07.

[2] For referenced ASTM standards, visit the ASTM website, www.astm.org, or contact ASTM Customer Service at service@astm.org. For *Annual Book of ASTM Standards* volume information, refer to the standard's Document Summary page on the ASTM website.

[3] The last approved version of this historical standard is referenced on www.astm.org.

[4] The boldface numbers in parentheses refer to the list of references at the end of this practice.

Copyright © ASTM International, 100 Barr Harbor Drive, PO Box C700, West Conshohocken, PA 19428-2959. United States

Documents
Document Sharing Hub
Full document details: ASTM F1027-86(2007)

5. Significance and Use

5.1 This practice is useful for assessing the cytotoxic potential both when evaluating new materials or formulations for possible use in medical applications, and as part of a quality control program for established medical devices.

5.2 This practice is used for assessing the cytotoxic potential of materials intended for the fabrication of inserts or implants in the orofacial region.

5.3 This practice is restricted to normal non-transformed, human orofacial tissues using cells cultured in human serum factors and does not depend upon cells and serum from non-human sources.

5.4 This practice incorporates procedures to monitor the quality of ingredient materials and the uniformity of the production process for formulating stock compositions.

5.5 This practice may be useful to determine the effects of age and radiation, and the state of carcinogenicity on the sensitivity of HED tissues to materials and devices used for orofacial prostheses.

6. Apparatus

6.1 *Incubator,* capable of maintaining a temperature of 37 ± 1°C and an atmosphere of 95 % air and 5 % CO_2 with at least 90 % relative humidity.

6.2 *Plastic and Glassware,* that is specified by chemical type and is traceable to its source of supply by catalog number or trade designation of the manufacturer or vendor.

6.3 *Laminar Flow Cabinet,* that meets the Class 100 clean room requirements of the U. S. Federal Standard 209B or the National Standard Foundation Standard NSF 49.

6.4 *Fluid Filters,* capable of removing 95 % of particles 0.22 µm or larger.

6.5 *Water Purification System,* with filtration capability for organic contaminants, capable of producing water with resistivity of 18 MΩ-cm or greater.

6.6 *Inverted Stage Microscope,* with phase contrast optics.

6.7 *Bright Field Microscope,* or a photomicroscope with magnification to 200×.

7. Reagents

7.1 *Medium A3*—Chemically defined medium A3 described by Holmes (**3**).

NOTE 4—Other chemically defined media shall be acceptable provided the test human cell adapts within 1 to 3 days to a steady growth rate from low cell density for a period of 7 to 30 days.

7.2 *Trypsin 0.25 % Solution,* stored in lyophilized form at 3 to 5°C. A solution may be prepared as needed and used at 37°C.

7.3 *Insulin,* 6.6 U/100 mL, used as supplement for primary cell and cell line cultures.

7.4 *Miscellaneous Fixatives,* dehydrating solutions, stains, and so forth, for making permanent record microscopic slides.

8. Human Serum

8.1 The human serum shall be processed in accordance with the method described in Annex A2.

NOTE 5—The dialysis treatment serves to remove suspect toxicants, ingested medication, unneeded adventitiae, and unidentified growth inhibitants with exclusion up to a molecular weight of 3500 Daltons.

9. Cell Growth Factors

9.1 *Alpha Growth Factor (AGF)*—AGF, separated from the dialyzed human serum as described in Annex A3, shall be used as needed to enhance cell growth.

NOTE 6—Initially designated alpha-1-protein (**4**), AGF can be used in place of whole serum to maintain the reference established cell line (ECL) cultures for the 7 to 30 day test period when added to a chemically defined medium (See 7.1).

10. Reference ECL Cells

10.1 Human non-transformed established cell line (ECL) cell obtainable from a repository source, such as the American Type Culture Association (ATCC), shall be used as a reference to monitor the procedural details for uniformity of the testing system and for indication of quality and reliability of culture medium, human serum preparation, and quality of selected growth factors.

NOTE 7—For interlaboratory comparison of these procedural details, the clinically accessible gingival orofacial tissue cell, as well as the mucosal (nasal, maxillo, and so forth), shall be selected and appropriately designated.

11. (HED) Cells

11.1 Human tissues of the orofacial region, obtained from patient donors, shall be cultured as explants until sufficient cell density is attained for succeeding passages into a valid primary cell line.

12. Preparation of Specimens

12.1 Aseptic techniques shall be used throughout the procedure.

12.2 Warm all solutions and materials to a temperature of 37 ± 2°C before placing in contact with cells.

12.3 *Specimens:*

12.3.1 Test materials shall range from 0.1 to 1 mm in thickness, cut into square or triangular geometries, 10 to 15 mm on a side.

12.3.2 Test specimens shall be sterilized by the method used in the preparation of the finished device.

12.3.3 The test arrangement must provide total immersion and immobilization of specimens (see Fig. 1). A pair of slots is cut in the specimen and a suitably cleaned cover glass (9 by 50 mm, No. 1) is threaded through the slots. One or more round holes (3 mm in diameter) are pre-cut in the center of the specimen. This provides an area of high leaching concentration as well as a focus for a photomicrographic record.

NOTE 8—If contamination of the assembled test material-microslip is suspected, it may be autoclaved before insertion into a sterile culture flask.

12.4 Conventional practices of maintaining contaminant-free working conditions shall be applied in handling tissues,

AVA Documents
Document Sharing Hub

Full document details: ASTM F1027-86(2007)

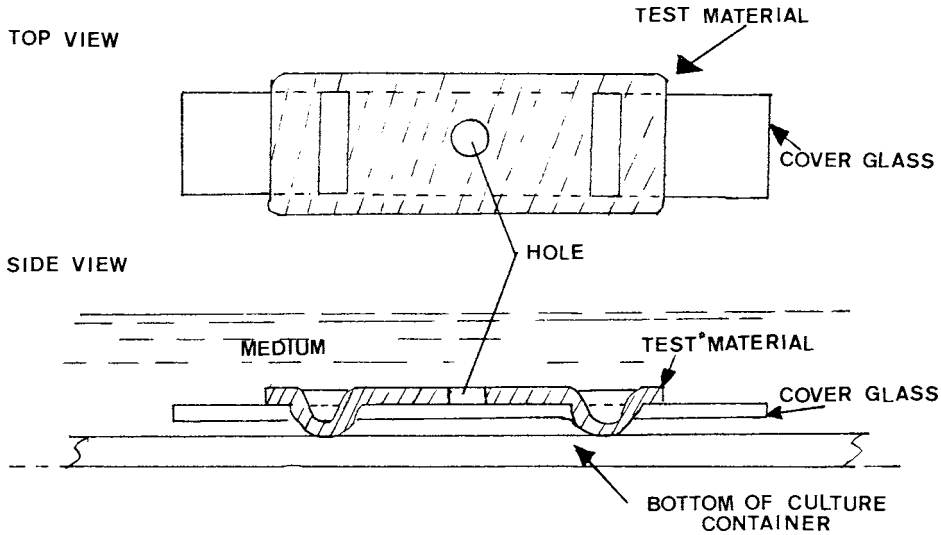

NOTE 1—Test specimens less than 1 mm in thickness tend to float. The figure depicts one means of maintaining submerged contact between specimens and cell cultures.

NOTE 2—Dimensions and configuration of the hole, serving for initial cell seeding, may be optionally modified and appropriately specified.

FIG. 1 Arrangement for Submersing and Immobilizing Specimens

cells, and glassware with well-established techniques as already prescribed in numerous texts and handbooks. In this connection, see the work by John Paul (**5**) as one of several texts dealing with prevention of aerial and fluid contamination in cell culture practices.

13. Preparation of (ECL) Cultures

13.1 The reference cell line (see 10.1) shall be routinely maintained as stock cultures, either in completely chemically defined A3 medium or in Annex A3 medium containing the alpha growth factor (AGF), or in A3 medium supplemented with 10 % processed human serum.

13.2 Medium changes are made every 48 to 72 h or on a triweekly schedule, such as Mondays, Wednesdays, and Fridays. Cultures are checked microscopically at the time and observed for any morphological changes or contamination, delayed or incidental.

13.3 Cell stock cultures of established cell line are maintained not only as source of cells for the biocompatibility assessment but also as a means to ascertain and verify the quality and titer of the production lots of processed human serum and preparation lots of separated AGF.

14. Preparation and Maintenance of Primary Human Cells

14.1 Place the human excised donor tissue (explant) asceptically onto a sterile petri dish holding gauze covered with A3 medium containing 10 % processed human serum.

14.2 Dissect explant immediately into small pieces, cut into 1 to 2 mm thin slices approximately 2 to 4 mm^2 in cross-sectional area.

14.3 Incubate at 37 ± 1°C in a 5 % CO_2 and 95 % air atmosphere in quadruplicate series of culturing containers until a monolayer is formed and confirmed microscopically.

14.4 Trypsinize with fresh, ready prepared 0.25 % trypsin solution.

NOTE 9—Other methods of enzyme treatment may be utilized provided the outcome of the assay has been substantially equivalent.

14.5 Place the trypsinized cells in sterile culture flasks to prepare a stock of first passage cells for the biocompatibility test (see Section 17).

14.6 Check the first passage cultured cells for native contamination by virus, bacteria, and pleuropneumonia-like organisms (PPLO). Discard if present and identified and replace with new donor explants.

NOTE 10—Such microorganisms are often entrapped in oral mucosal tissues as contaminants, which could compromise the validity of the test result by imposing foreign, nonspecific cytotoxicity in the procedure in Section 17.

14.7 Harvest the cultured propagated cells for use in amounts needed in 17.3. Store any unused portion in glycerol or dimethyl sulphoxide (DMSO) at −70°C for new sets of tests, using the procedure described in Chapter XIX of Ref. 5.

15. Ascertaining Minimum Effective Titer of Growth Factor

15.1 The selected reference human ECL cell shall be adapted to grow in the Holmes A3 medium or in a culturing medium of equivalent effectiveness using:

15.1.1 Initial low density cell level of 10^3 to 10^4 cells/mL,

15.1.2 One percent processed (Annex A2) human serum,

15.1.3 A series of alpha growth factor comprising 0, 0.1, 1.0, and 10 µg (dry basis) per millilitre of media.

15.1.4 Grown to confluent monolayer with a schedule of three fresh media maintenance replenishments per week as indicated in 13.2.

NOTE 11—It is essential to recognize the various phases of cell growth, which includes adaptation (I), usually with decreasing cell [illegible] for

Document Sharing Hub

Full document details: ASTM F1027-86(2007)

one or more days, followed by log growth (II), usually referred to in population doubling time, leading to monolayer confluency (III), and ultimately to decline (IV) in cell population by reason of senescence or toxicity. In this connection, appropriate, periodic cell counts to confluency (IV) can be applied as described by Lontz (**6**).

15.2 Following the attained confluency in the above AGF 0 to 10 µg/mL range, the minimal supplementation by AGF is noted for use in the ensuing procedure for biocompatibility of prosthetic material samples (Section 17).

16. Reference Control and Materials

16.1 The *negative* control shall be a material that consistently does not inhibit cell growth as observed visibly or by an appropriate increase in cell count during growth to confluency. The following material may be used:

16.1.1 USP Negative Control Plastic Reference Standard (**7**).

16.1.2 Fluorocarbon film or sheeting.

NOTE 12—Satisfactory sheetings are Teflon FEP fluorocarbon, 10 mil (0.010 in.) in thickness and a copolymer of tetrafluorethylene and hexafluoropropylene of commercial prominence; This grade of fluorocarbon polymer is uniquely useful because of (*a*) exceptional chemical inertness, (*b*) high specific gravity, higher than most of the nutrient media, and (*c*) exceptional clarity for viewing cell structure.

16.1.3 Polystyrene culturing flask used in the test procedure.

16.2 The *positive* control shall be a material as required in other cell culture test methods, such as Practice F813, section 8.2.2, or specially compounded at a level of 1 %, mixed in RTV grade of commercial silicone with known toxic agent, such as listed in Registry of Toxic Substance (**2**).

NOTE 13—Although phenol is a common reference toxicant (Practice F813, Section 8.7.1), its aqueous solubility and hence leachability is too rapid. For suitable, less soluble alternatives, use any of its aryl substituted chloro or nitro derivatives listed in the Registry.

16.3 Prosthetic material used in the device shall be in the chemically converted form, appropriately polymerized or otherwise consolidated to the final fabricated stage of the prosthetic device.

16.4 All prosthetic test materials, including the positive and negative controls, shall be in the substantially similar or equivalent form of thin film or sheeting in the range of 0.1 to 1.0 mm thickness, within a range of surface area of 2 to 4 cm^2 with mensurations of each of the test material specimens in terms of:

16.4.1 Shape description, that is, square, rectangle, and so forth.

16.4.2 Density or specific gravity.

16.4.3 Thickness (mm).

TABLE 1 Test Cell Type, Medium, and Serum Options

Cell Type	Medium	Human Serum (*P*) Maximum Level(*), %
(*A*) Human Orofacial (primary)	A3 with 6.60 Medium	10
(*B*) Established Cell Line[A]	A3	(Replaced by 0.1 to 10 % AGF)
(*C*) Established Cell Line	A3	10

[A] The combinations (*B*) and (*C*) of this table are used to ensure cell viability and procedural consistency.

16.4.4 Weight (mg).

16.4.5 Surface area (m^2).

16.4.6 Volume (mL).

16.4.7 Surface/volume ratio.

16.5 In case of low-density test material specimens that tend to float on the culture medium and away from the developing, culturing monolayer, submerge the test specimen with an appropriate weighting, such as depicted in Fig. 1.

17. Assessment of Biocompatibility of Prosthetic Material

17.1 Conduct concurrently the biocompatibility assessment of the prosthetic material samples by using the three combinations (a, b, and c) of cell type, medium and serum options shown in Table 1.

17.2 Conduct the biocompatibility assessment of the prosthetic material sample in accordance with the format shown in Table 2.

17.3 Suspend the stock human primary cells, (see 14.7), dislodged either by scraping or by trypsin treatment, into fresh A3, or equivalent medium, with optimal additives of serum, insulin, and growth factor described in 17.1 and Table 1.

17.4 Place an aliquot portion adjusted to a level of 10^3 to 10^4 cells/mL, determined by counting using a hemocytometer, each of the quadruplicate series of Table 2, with the appropriate A3 medium or its equivalent.

17.5 Replenish the culture medium at a maintenance feeding schedule of three times weekly or every 48 h for at least 7 days.

17.6 Examine microscopically at each maintenance feeding and compare the cell growth with regard to evidence of cell growth viability and, where indicated, cell abnormality compared to the control series (*A*) of Table 2.

NOTE 14—These abnormalities shall include visual evidence of (*a*) malformation or degeneration in structure, (*b*) cell lysis, or (*c*) reduced cell population or actual cell count.

TABLE 2 Biocompatibility Format[A] for Primary Human Cells (for 12.4.7) for 7 or 30 Days (optional)[B]

Test Material in Culturing Series	Number of Culture Flasks	
	Morphological Assessment	Optional[C] Biochemical Assessment
(*A*) None—Procedural Control[D]	4	4
(*B*) Prosthetic Material Test Specimen	4	4
(*C*) Positive Control (cytotoxic reference)	4	4
(*D*) Negative Control (nontoxic reference)	4	4

[A] The cell stocks in this test matrix shall be drawn from a pool of stock cultures maintained in the same A3 or equivalent medium as supplemented and selected for this format.

[B] The optional 30-day test period, or longer, shall be acceptable with cells or from media modifications where diverse human cell growth adaptation may require extended periods.

[C] For use as collateral, adjunctive assessment for cell viability or cell transformations, or both.

[D] When using sterile polystyrene plastic containers of established non-cytoxicity, series (*A*) may be used as the negative control in lieu of series (*D*).

AVA Documents
Document Sharing Hub

Full document details: ASTM F1027-86(2007)