This international standard was developed in accordance with internationally recognized principles on standardization established in the Decision on Principles for the Development of International Standards, Guides and Recommendations issued by the World Trade Organization Technical Barriers to Trade (TBT) Committee.

Designation: F1115 – 16 (Reapproved 2023)

Standard Test Method for Determining the Carbon Dioxide Loss of Beverage Containers[1]

This standard is issued under the fixed designation F1115; the number immediately following the designation indicates the year of original adoption or, in the case of revision, the year of last revision. A number in parentheses indicates the year of last reapproval. A superscript epsilon (ε) indicates an editorial change since the last revision or reapproval.

1. Scope

1.1 The objective of this test method is to determine the carbon dioxide (CO_2) loss from plastic beverage containers after a specified period of storage time.

1.2 Factors contributing to this pressure loss are volume expansion and the gas transport characteristics of the package, including permeation and leakage.

1.3 The values stated in SI units are to be regarded as standard. No other units of measurement are included in this standard.

1.4 *This standard does not purport to address all of the safety concerns, if any, associated with its use. It is the responsibility of the user of this standard to establish appropriate safety, health, and environmental practices and determine the applicability of regulatory limitations prior to use.*

1.5 *This international standard was developed in accordance with internationally recognized principles on standardization established in the Decision on Principles for the Development of International Standards, Guides and Recommendations issued by the World Trade Organization Technical Barriers to Trade (TBT) Committee.*

2. Referenced Documents

2.1 *ASTM Standards:*[2]

D1129 Terminology Relating to Water

D1193 Specification for Reagent Water

3. Terminology

3.1 *Definitions of Terms Specific to This Standard:*

3.1.1 *automated CO_2 analyzer*—an electronic unit that will pierce the roll-on closure and automatically read pressure and temperature and calculate volume of gas (Procedure B). There are multiple manufacturers of these instruments.

3.1.2 *carbonation volume*—the volume of CO_2 (at 0 °C, 1 atm pressure) that is dissolved in the carbonated water, divided by the volume of the liquid (based on water volume at 3.98 °C equals 1.000 g/cm^3). The conversion of pressure to carbonation volumes should be made using a carbonation volumes table. A table for carbonated water would not necessarily apply to liquids containing additional substances, such as carbonated beverages containing sugar.

3.1.3 *finish*—the threaded part of the bottle which receives the cap.

3.1.4 *initial pressure*—the equilibrium pressure in the test bottles as measured at 24 h after filling with carbonated water. (The filled bottles are allowed to stand for 24 h to obtain temperature equilibrium with the test environment and to allow time for pressure adjustment and equilibration of the CO_2 in the headspace and liquid).

3.1.5 *manual pressure tester*—a unit that manually pierces the closure and measures container pressure; an attached thermometer is then used to measure temperature (Procedure B).

3.1.6 *pressure monitoring device*—a pressure gauge or transducer assembly with support electronics for indicating internal pressure level of the bottle. This device is used with brass closure fitting-equipped bottles.

3.1.7 *sample*—a set of bottles produced on the same equipment in a single run and using the same material and process conditions. Bottles should represent normal thickness distribution.

3.1.8 *shelf life*—the number of weeks a sample set of bottles retain a specified carbonation level, or a percent of the initial level.

3.1.9 *support ring*—a protrusion below the bottle finish which is used to support or stabilize the bottle during filling and capping.

3.1.10 *temperature monitoring device*—a thermocouple with support electronics (same equipment as described in 7.2.2). A precision glass thermometer may be used, provided a bottle filled with noncarbonated water is used as a control in each sample set (Procedure A).

[1] This test method is under the jurisdiction of ASTM Committee F02 on Primary Barrier Packaging and is the direct responsibility of Subcommittee F02.10 on Permeation.

Current edition approved May 1, 2023. Published June 2023. Originally approved in 1987. Last previous edition approved in 2016 as F1115 – 16. DOI: 10.1520/F1115-16R23.

[2] For referenced ASTM standards, visit the ASTM website, www.astm.org, or contact ASTM Customer Service at service@astm.org. For *Annual Book of ASTM Standards* volume information, refer to the standard's Document Summary page on the ASTM website.

Copyright © ASTM International, 100 Barr Harbor Drive, PO Box C700, West Conshohocken, PA 19428-2959. United States

Documents
Document Sharing Hub
Full document details: ASTM F1115-16(2023)

3.2 For other terms used in this test method, refer to Terminology D1129.

4. Summary of Test Method

4.1 Test bottles are filled with carbonated water or beverage and, after closure application, are exposed to test environments for specified time periods. By periodically measuring the initial and final carbonation levels in the container, the carbonation loss and carbonation transfer rate can be calculated.

5. Significance and Use

5.1 Two procedures, A and B, are outlined in this test method. Procedure A is used most often for development of various beverage container designs to determine the functional characteristics of the package in regard to shelf life. Procedure B is recommended for use in beverage filling operations as a quality control tool in maintaining the desired CO_2 fill pressure. A loss of CO_2 will affect product taste.

5.1.1 Procedure A involves the use of sensitive pressure and temperature monitoring equipment where a high degree of accuracy is essential, for example, a micro-pressure transducer and thermocouple for measuring pressure and temperature of the package in a closed system. Alternatively, this procedure may also use bottles closed with roll-on aluminum caps containing rubber septums. The septum is pierced with a hypodermic needle attached to a pressure transducer to obtain pressure readings. This procedure should be confined to laboratories that are practiced in this type of analytical testing.

5.1.2 Procedure B is more widely used when measuring the carbonation level of the package due to the simplicity of the technique. A simple Manual pressure assembly or an Automated CO_2 Analyzer is utilized.

6. Interferences

6.1 The following conditions can interfere with the test results:

6.1.1 CO_2 leakage at closure due to defective bottle finish or improper sealing of closure apparatus,

6.1.2 CO_2 leakage due to improper equipment set-up,

6.1.3 Change in ambient temperature, upsetting the equilibrium of the headspace and dissolved CO_2 gas,

6.1.4 Measurement of pressure before the bottle and liquid have reached ambient temperature,

6.1.5 Inaccurate thermocouple device used for measuring the liquid temperature,

6.1.6 Excessive air in the bottle headspace or dissolved in the liquid,

6.1.7 Inaccurate or erratic pressure monitoring device,

6.1.8 Ambient humidity in the test area,

6.1.9 Age of bottles, and

6.1.10 Excessive bottle-to-bottle variation in the material distribution, which may result in a wide variation from bottle to bottle within the sample population.

7. Apparatus

7.1 *Procedures A and B:*

7.1.1 *Bottle Stand,* optional.

7.1.2 *Height Measuring Device,* capable of measuring to within 0.001 in. (optional).

7.1.3 *Top Loading Balance,* capable of weighing to 2500 g with an accuracy of ±0.01 g (optional).

7.1.4 *Outside Diameter Measuring Device,* π tape or similar device (optional).

7.1.5 *Carbonated Water or Beverage Dispensing Equipment.*

7.1.6 *Micrometer or Ultrasonic Thickness Gauge,* capable of measuring to within 0.001 in. or less (optional).

7.2 *Procedure A:*

7.2.1 *Machined Metal Cap* (see Fig. 1).

7.2.2 *Temperature-Measuring Device,* capable of accurately measuring temperature in increments of 0.1 °C or less in a range from 18 °C to 32 °C (65 °F to 100 °F).

7.2.3 *Pressure-Monitoring Device.*

7.2.4 *Fillpoint-Level Syringe Assembly* (see Fig. 2).

7.3 *Procedure B:*

7.3.1 *Pressure- and Temperature-Measuring Device.*

8. Reagents and Materials

8.1 Water carbonated to a level sufficient to ensure a minimum carbonation level of 4.5 volumes in the filled bottles. Reagent water conforming to Type IV of Specification D1193 or better shall be used.

8.2 *Carbon Dioxide,* compressed (CO_2).

8.3 *Leak-Detecting Solution.*

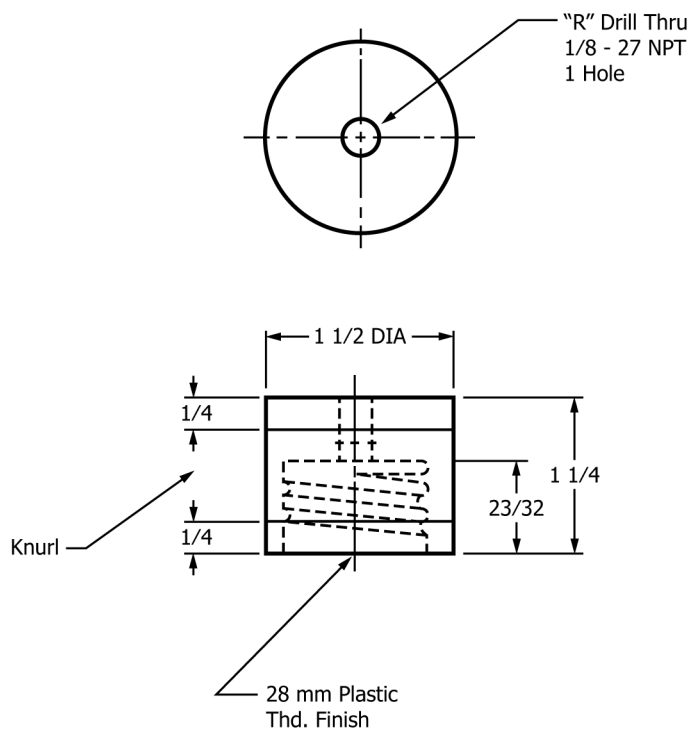

NOTE 1—Break sharp edges. All dimensions are inches unless otherwise stated. If conversion of dimension is desired, use standard equivalence table.

Material: Brass.

FIG. 1 Machined Metal Cap for PET Beverage Bottle Testing

AVA Documents
Document Sharing Hub

Full document details: ASTM F1115-16(2023)

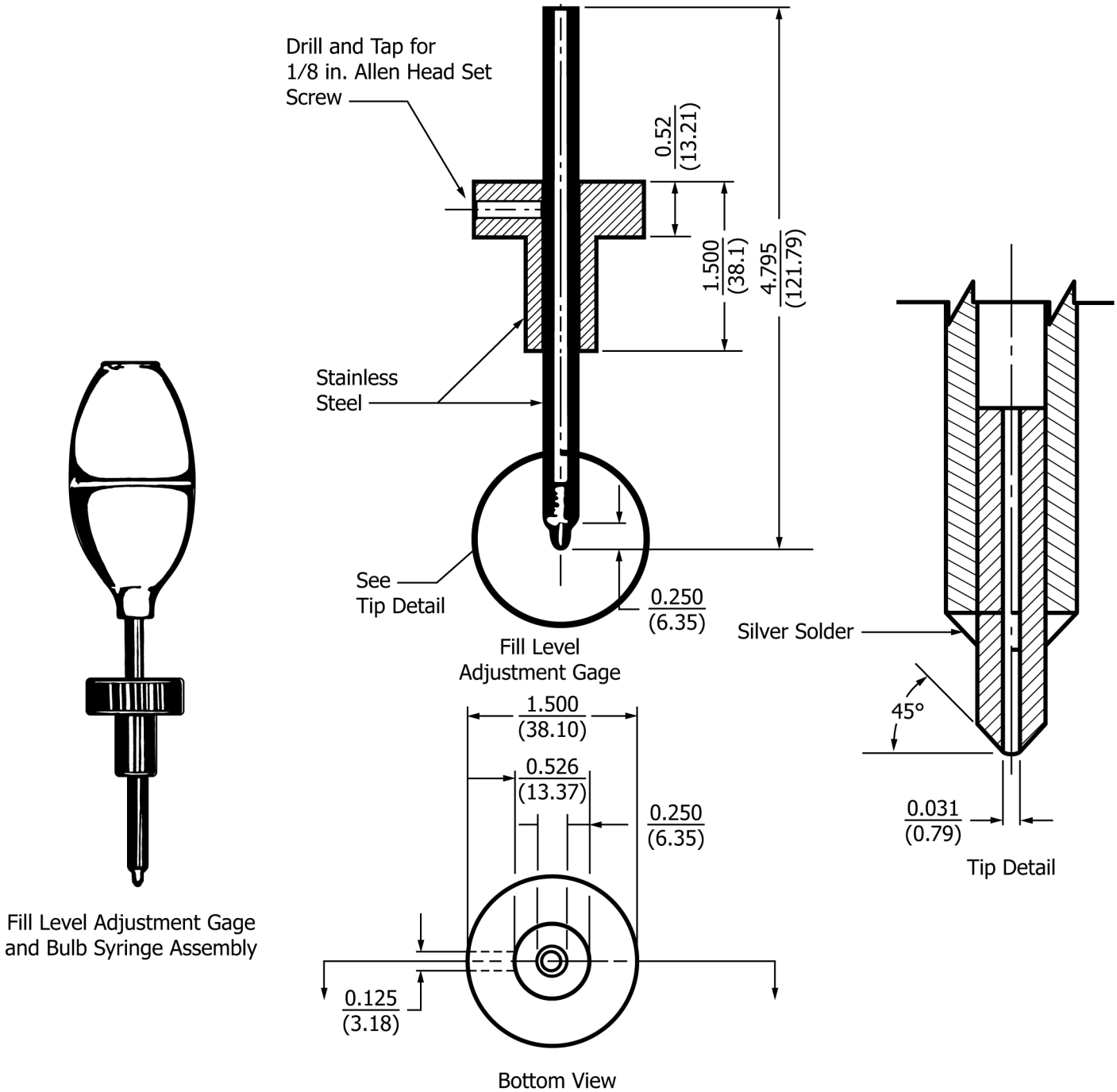

NOTE 1—Dimensions are in inches and millimetres. Other styles of suction bulbs may be used, including an in-line bulb for use with flexible tubing attached to the gauge. The assembly must be adjusted for the specified fill point (from the top down) for the specific bottle size and style being evaluated. The gauge may be adjusted using a preset syringe adjusting device or other measuring devices such as the vertical height gauge (see 7.1.2). The gauge should be set 0.050 in. (1.27 mm) less than the specified value to compensate for the extra liquid withdrawn due to the effect of surface tension.

FIG. 2 Fillpoint Level Adjustment Syringe

9. Conditioning

9.1 Test bottles must be conditioned at 23 °C (73.4 °F) ± 2 °C and 50 % ± 5 % relative humidity for at least 72 h and tested at the same conditions unless other conditions are agreed upon by the parties involved.

9.2 Bottles may be tested with or without base cup attached.

10. Procedure A

10.1 *Apparatus Preparation:*

10.1.1 Assemble and calibrate pressure- and temperature-monitoring equipment.

10.1.2 Pressure test assembly at 60 psi using leak detecting solution.

AVA Documents
Document Sharing Hub

Full document details: ASTM F1115-16(2023)

10.1.3 Check calibration of monitoring equipment.

10.2 Record weight and dimensions of empty and filled bottles (optional).

10.2.1 Weigh each empty bottle to at least 0.01 g.

10.2.2 Measure the outside diameter of each empty bottle using a π tape. Measure at the center of the label panel, or other previously agreed upon location(s).

10.2.3 Measure the height of each empty bottle to the bottom of the support ring using a vertical height gauge or similar equipment.

10.3 *Filling Bottles:*

10.3.1 Using a carbonating unit or similar equipment, fill containers to the nominal fill level with carbonated water cooled to 5 °C (41 °F) or below, preferably 1 °C (34 °F). Samples must be carbonated to no less than 4.5 volumes CO_2. Use Table X1.1 or another table agreed upon by the parties involved to determine CO_2 content by measuring pressure and temperature with the equipment described in Section 7.

10.3.2 Using a fillpoint-level syringe, draw liquid level down to the specified fillpoint.

10.3.3 Immediately after the fillpoint-level adjustment, apply the pressure monitoring apparatus tightly to the bottle. DO NOT AGITATE THE BOTTLE. A brass closure fitted with a micropressure transducer or pressure gauge (see Fig. 3) and a thermocouple capable of reading within increments of 0.1 °C and 1.0 psi, respectively, or a roll-on aluminum closure fitted with a rubber septum have been found satisfactory for this purpose.

10.3.4 Fill a minimum set of five bottles for each sample.

10.3.5 If the testing device used does not have a temperature sensing probe inside the bottle, fill another bottle with cold noncarbonated water to use as a temperature control for this set of bottles. This bottle should be kept with this set during storage, agitation, and testing. Its temperature shall be used for the temperature of each bottle in the set when determining carbonation level.

10.4 *Pressure Adjustment and Equilibration of Filled Bottles:*

10.4.1 Allow filled bottles to come to ambient storage temperature, and let stand for 24 h in the test environment.

10.4.2 After bottles have equilibrated for 22 h at ambient temperature, agitate the bottles for at least one min using hand shaking or mechanical agitation to ensure proper equilibration of headspace and dissolved CO_2. Shift pressure or add CO_2 gas as required to adjust the carbonation level to 4.0 volumes ±0.05 volumes according to a carbonation volumes table. The starting CO_2 level is critical.

10.4.3 After a total of 24-h equilibration, again agitate the test bottles and determine their carbonation level. If any bottle has a carbonation level of 3.95 volumes or less, discontinue testing of that bottle.

10.5 *Measurements:*

10.5.1 Before filling bottles for the carbonation level test, measure wall thickness profile using suitable equipment to determine the quality of the material distribution (optional).

10.5.2 Twenty-four hours after filling, agitate each test bottle to equilibrium pressure for at least 1 min to obtain the initial values as outlined below:

10.5.2.1 Equilibrium pressure of each bottle,

10.5.2.2 Temperature of each bottle or the control bottles,

10.5.2.3 Carbonation level (from a carbonation volumes table),

10.5.2.4 Bottle height to the bottom of the support ring (optional), and

10.5.2.5 Bottle outside diameter (optional).

10.5.3 Repeat measurements, and agitate bottle for at least 1 min prior to measuring pressure and temperature at 3 days, 1 week, 3 weeks, 6 weeks, 8 weeks, 12 weeks, and 16 weeks. If attached pressure transducers or gauges are used, pressure and temperature may be measured more frequently (for example, weekly) either to allow early prediction of shelf life or to obtain a more precise measure of the end point.

10.5.4 If the attached septum method is used, a set of six glass control bottles of the same capacity must be tested along with the plastic bottles. Average loss of these bottles must be subtracted from the loss of the plastic bottles to compensate for CO_2 lost from the septum.

11. Procedure B

11.1 *Apparatus Preparation:*

11.1.1 Ensure proper calibration of the automated CO_2 analyzer or manual apparatus using appropriate manufacturer's guidelines.

11.1.2 Pressure test assembly to ensure no pressure leakage will occur.

11.2 *Test Initiation:*

11.2.1 This test method usually involves filled product containers selected from a commercial beverage location. Select a random sample of at least 50 bottles.

11.2.2 If commercially filled and capped bottles are not available, fill the bottles with either carbonated water or product and apply aluminum roll-on closures using a capper.

11.2.3 Using the automated CO_2 analyzer, manual apparatus, or similar device, pierce the closure and measure the pressure and temperature of at least six bottles.

11.2.4 Agitate each bottle for at least 1 min until the equilibrated pressure and temperature is achieved. This is indicated when the maximum pressure is reached.

11.3 *Measurements:*

11.3.1 Follow the procedure given in 10.5.2 and 10.5.3.

11.3.2 A sample size of at least 50 bottles is needed for a long-term test. Since each bottle is destroyed at each test interval, a minimum of five bottles are needed at each interval outlined in 10.5.3.

12. Calculation

12.1 Calculate the percent of CO_2 retention for each bottle after each measurement (based on an initial carbonation level of 100 %). Calculate the mean average of the CO_2 volumes to determine the percent CO_2 retention of the sample.

AVA Documents
Document Sharing Hub

Full document details: ASTM F1115-16(2023)