NOTICE: This standard has either been superseded and replaced by a new version or withdrawn.
Contact ASTM International (www.astm.org) for the latest information

Designation: F 1261M – 96 (Reapproved 2003)

Standard Test Method for Determining the Average Electrical Width of a Straight, Thin-Film Metal Line (Metric)[1]

This standard is issued under the fixed designation F 1261M; the number immediately following the designation indicates the year of original adoption or, in the case of revision, the year of last revision. A number in parentheses indicates the year of last reapproval. A superscript epsilon (ϵ) indicates an editorial change since the last revision or reapproval.

1. Scope

1.1 This test method is designed for determining the average electrical width of a narrow thin-film metallization line.

1.2 This test method is intended for measuring thin metallization lines such as are used in microelectronic circuits where the width of the lines may range from micrometres to tenths of micrometres.

1.3 The test structure used in this test method may be measured while still part of a wafer, or part therefrom, or as part of a test chip bonded to a package and electrically accessible by means of package terminals.

1.4 *This standard does not purport to address all of the safety concerns, if any, associated with its use. It is the responsibility of the user of this standard to establish appropriate safety and health practices and determine the applicability of regulatory limitations prior to use.*

2. Referenced Documents

2.1 *ASTM Standards:* [2]

E 178 Practice for Dealing With Outlying Observations

F 1260M Test Method for Estimating Electromigration Median Time-To-Failure and Sigma of Integrated Circuit Metallizations [Metric]

3. Terminology

3.1 *Definitions of Terms Specific to This Standard:*

3.1.1 *electrical linewidth*—the width of the line as calculated by the product of the sheet resistance of the metal film and the line length, divided by the line resistance.

3.1.2 *metallization*—the thin-film metallic conductor used as electrical interconnects in a microelectronic integrated circuit.

3.1.3 *test structure*—a passive metallization structure, with terminals to permit electrical access, that is fabricated on a semiconductor wafer by procedures used to manufacture microelectronic integrated circuits.

4. Summary of Test Method

4.1 This test method uses a cross-bridge test structure that has two components: One is a cross, consisting of two perpendicularly intersecting metallization lines, which is used to determine the sheet resistance by a van der Pauw method in which a forcing current, I_1, through two adjacent arms to the cross, develops a voltage that is measured using the remaining two arms. The other component is a bridge element that includes the line whose width is to be determined. Two voltage taps contact this line at a known distance from each other. By forcing a known current, I_2, through the line and measuring the voltage difference beween the voltage taps, the mean width of the line can be calculated.

5. Significance and Use

5.1 The width of a conductor line is important to ensure predictable timing performance of the electrical interconnect system, to assure control of critical device parameters, and to control various processes involved in microcircuit manufacture.

5.2 The width of a conductor line, with its thickness, defines the cross-sectional area and therefrom the current density for a given current. Knowledge about the current density is important in procedures for estimating reliability against degradation due to electromigration and in the conduct of electromigration stress tests to obtain sample estimates of the median-time-to-failure and sigma (see Test Method F 1260).

6. Interferences

6.1 If the four cross-resistance values (in 8.1.8) differ by more than approximately 5 %, when "wafer-level" measurements are made with contact probes at room temperature, then poor electrical contact may be the cause. Poor contacts will lead to an erroneous value for the cross resistance as well as for the linewidth. When measurements are made at elevated temperatures, the differences in the four cross-resistance values will be larger. Good electrical contact will then be indicated

[1] This test method is under the jurisdiction of ASTM Committee F01 on Electronics and is the direct responsibility of Subcommittee F01.11 on Nuclear and Space Radiation Effects.

Current edition approved June 10, 2003. Published June 2003. Originally approved in 1989. Last previous edition approved in 1996 as F 1261M – 96.

[2] For referenced ASTM standards, visit the ASTM website, www.astm.org, or contact ASTM Customer Service at service@astm.org. For *Annual Book of ASTM Standards* volume information, refer to the standard's Document Summary page on the ASTM website.

Copyright © ASTM International, 100 Barr Harbor Drive, PO Box C700, West Conshohocken, PA 19428-2959, United States.

Documents
Document Sharing Hub
Full document details: ASTM F1261M-96(2003)

when the relative values of the cross resistances remain approximately the same with subsequent placements of the contact probes on the same or similar structures.

6.2 Measurements should be conducted in a time that is short in comparison to any temperature changes that may occur in the metallization. If measurements are made in an environment where the temperature of the metallization changes by δT between the time that the resistance of the cross and the resistance of the bridge line are measured, then an error of TCR(T)δT % in the calculation of the linewidth will result due to the thermal coefficient of resistance, TCR(T), of the metallization.

6.3 If the bridge line has been so over etched that its cross section becomes triangular and its peak is less than the thickness of the metal in the cross, then the test method will provide a width that is too small.

7. Apparatus

7.1 *Constant Current Supply*, capable of forcing through the cross bridge test structure a current that is constant and has a current-display resolution of at least 1 % of the forcing currents required.

7.2 *Voltmeter*, capable of measuring the voltage developed in the cross-bridge test structure and that has a display resolution of at least 1 % of the voltage measured.

NOTE 1—Sensitive measurement equipment is needed to determine the resistance of the cross. The typical resistance of the cross is only 12 to 18 mΩ for a 0.5-µm-thick, aluminum-alloy metallization and the forcing current must be limited to avoid measurement errors due to joule-heating.

7.3 *Cross-Bridge Test Structure*, whose essential features are illustrated in Fig. 1. In the bridge element of the structure, they are: the width of the test line, W_b; the width of voltage-tap lines, W_t; the center-to-center distance between the voltage-tap lines, L_b; the length of the voltage-tap lines, L_t; and the length of the test-line extensions beyond the tap lines, L_e. In the cross element, they are: the width of the cross lines, W_c; and the lengths (not necessarily all equal) of the straight sections of these lines from their intersection as represented by L_c. The contact pads are labeled for use in the procedure.

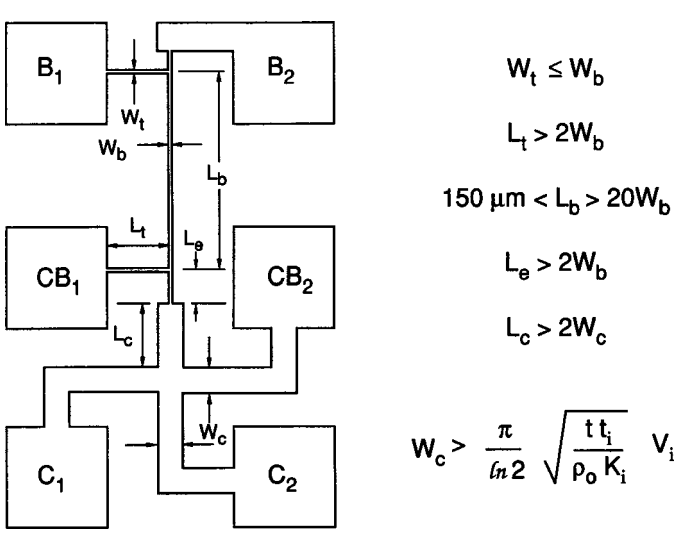

FIG. 1 Design Features for the Cross-Bridge Test Structure

7.3.1 The cross-bridge test structure shall conform to the following specifications: $L_e > 2W_b$; $L_t > 2W_b$; $L_b > 150$ µm and $20W_b$; and $L_c \geq 2W_c$.

7.3.2 The test structure shall also be designed so that width of the voltage-tap lines to the bridge structure shall be minimized but shall be no smaller than 1.2 times the minimum resolvable linewidth.

NOTE 2—The width of the voltage-tap line should be kept as small as practicable to minimize the error due to the shunting effect of the finite-width voltage taps. The specification for the minimum allowed design width is included to avoid the possibility of having the voltage-tap line as the weakest link in the patterning process.

7.3.3 So that the resistance of the cross can be measured without heating the metallization by more than 0.1°C, due to joule heating, the width of the cross shall satisfy the following condition:

$$W_c \geq \frac{\pi}{\ln 2}\sqrt{\frac{t \cdot t_i}{\rho \cdot K_i \cdot \delta T}}\, V_i \text{ (cm)},$$

where:

t and t_i = design thickness of the metallization and of the underlying electrical insulator, respectively, (cm),

ρ = estimated resistivity of the metallization, (Ω·cm),

K_i = estimated thermal conductivity of the insulator, (w/cm°C),

V_1 = 100 times the display resolution of the voltmeter used in the procedure, (V), and

δT = 0.1°C.

In calculating the value for W_c (cm), use either the value for K_i that has been determined for the electrical insulator or 0.10, 0.010, and 0.0015 *W*/cm°C for K_i when the insulator is silicon nitride, silicon dioxide, and a polyimide, respectively.

NOTE 3—In most cases, the specifications for W_c will be satisfied by a width of 30 µm.

7.3.4 If it is the intent for the cross-bridge structure to be used to measure, indirectly, the widths of lines elsewhere on the chip, the bridge line must duplicate the environment of those lines. Hence, the bridge line must be parallel to these lines and have the same local design features that can affect linewidth during the fabrication.

8. Procedure

8.1 Measure the average resistance, R_c, of the cross between contacts CB_1, CB_2, C_1, *and* C_2 *(see Fig. 1).*

NOTE 4—The cross-bridge structure shown in Fig. 1 is designed to minimize the number of contact pads required. It should be noted, especially if the user of this method employs structures of similar design, that the top arm of the cross in Fig. 1 must not be used to conduct the forcing current, I_1, *when measuring the resistance of the cross. The narrower lines, shown in series with the upper arm, are designed to carry the generally much smaller forcing current through the bridge line. If the top arm is mistakenly used to carry current intended for the cross measurement, excessive joule heating, damage, or even an open circuit in the narrower line will result.*

8.1.1 Select a forcing current I_1 *for the cross element that is not large enough to produce significant joule heating in the metallization.*

AVA Documents
Document Sharing Hub

Full document details: ASTM F1261M-96(2003)