This international standard was developed in accordance with internationally recognized principles on standardization established in the Decision on Principles for the Development of International Standards, Guides and Recommendations issued by the World Trade Organization Technical Barriers to Trade (TBT) Committee.

Designation: F1284 – 24

Standard Test Method for Evaluating Carpet Embedded Dirt Removal Effectiveness of Residential Central Vacuum Cleaning Systems[1]

This standard is issued under the fixed designation F1284; the number immediately following the designation indicates the year of original adoption or, in the case of revision, the year of last revision. A number in parentheses indicates the year of last reapproval. A superscript epsilon (ε) indicates an editorial change since the last revision or reapproval.

1. Scope

1.1 This test method covers only a laboratory test for determining the relative carpet dirt removal effectiveness of residential central vacuum cleaning systems when tested under specified conditions.

1.2 This test method is applicable to residential central vacuum cleaning systems intended for cleaning carpets.

1.3 This test method applies only to embedded dirt removal from carpets, not the removal of surface litter and debris.

1.4 The values stated in inch-pound units are to be regarded as standard. The values given in parentheses are mathematical conversions to SI units that are provided for information only and are not considered standard.

NOTE 1—The F11.21 subcommittee is actively pursuing new market relevant carpets for Specification F655 with the assistance of the carpet industry. Although plush and Freize carpet panels are no longer available for purchase, some laboratories may still have samples for testing. In such cases, the table values remain valid.

NOTE 2—Due to the influence of environmental conditions, variations in time, origin of test materials, and proficiency of the operator, most of the described test methods will give more reliable results when applied for comparative testing of a number of appliances at the same time, in the same laboratory, and by the same operator until a new interlaboratory study has been completed to provide repeatability and reproducibility values.

1.5 *This standard does not purport to address all of the safety concerns, if any, associated with its use. It is the responsibility of the user of this standard to establish appropriate safety, health, and environmental practices and determine the applicability of regulatory limitations prior to use.*

1.6 *This international standard was developed in accordance with internationally recognized principles on standardization established in the Decision on Principles for the Development of International Standards, Guides and Recommendations issued by the World Trade Organization Technical Barriers to Trade (TBT) Committee.*

2. Referenced Documents

2.1 *ASTM Standards:*[2]

D75 Practice for Sampling Aggregates

E11 Specification for Woven Wire Test Sieve Cloth and Test Sieves

E177 Practice for Use of the Terms Precision and Bias in ASTM Test Methods

E691 Practice for Conducting an Interlaboratory Study to Determine the Precision of a Test Method

F608 Test Method for Evaluation of Carpet Embedded Dirt Removal Effectiveness of Household/Commercial Vacuum Cleaners

F655 Specification for Test Carpets and Pads for Vacuum Cleaner Testing (Withdrawn 2022)[3]

F884 Test Method for Motor Life Evaluation of a Built-In (Central Vacuum) Vacuum Cleaner

F922 Test Method for Motor Life Evaluation of an Electric Motorized Nozzle

F1038 Test Method for Motor Life Evaluation of a Canister, Hand-held, Stick, and Utility Type Vacuum Cleaner Without a Driven Agitator

F1334 Test Method for Determining A-Weighted Sound Power Level of Vacuum Cleaners

F1409 Test Method for Straight Line Movement of Vacuum Cleaners While Cleaning Carpets

3. Terminology

3.1 *Definitions of Terms Specific to This Standard:*

3.1.1 *cleaning ability, n*—the potential of a vacuum cleaner to remove dirt from a surface (sometimes referred to in the industry as *cleanability, dry*).

3.1.2 *model, n*—the designation of a group of vacuum cleaners having identical, mechanical and electrical construction with only cosmetic or nonfunctional differences.

3.1.3 *population, n*—the total of all units of a particular model vacuum cleaner being tested.

[1] This test method is under the jurisdiction of ASTM Committee F11 on Vacuum Cleaners and is the direct responsibility of Subcommittee F11.21 on Cleanability.

Current edition approved Jan. 1, 2024. Published February 2024. Originally approved in 1992. Last previous edition approved in 2022 as F1284 – 22. DOI: 10.1520/F1284-24.

[2] For referenced ASTM standards, visit the ASTM website, www.astm.org, or contact ASTM Customer Service at service@astm.org. For *Annual Book of ASTM Standards* volume information, refer to the standard's Document Summary page on the ASTM website.

[3] The last approved version of this historical standard is referenced on www.astm.org.

Copyright © ASTM International, 100 Barr Harbor Drive, PO Box C700, West Conshohocken, PA 19428-2959. United States

Documents
Document Sharing Hub
Full document details: ASTM F1284-24

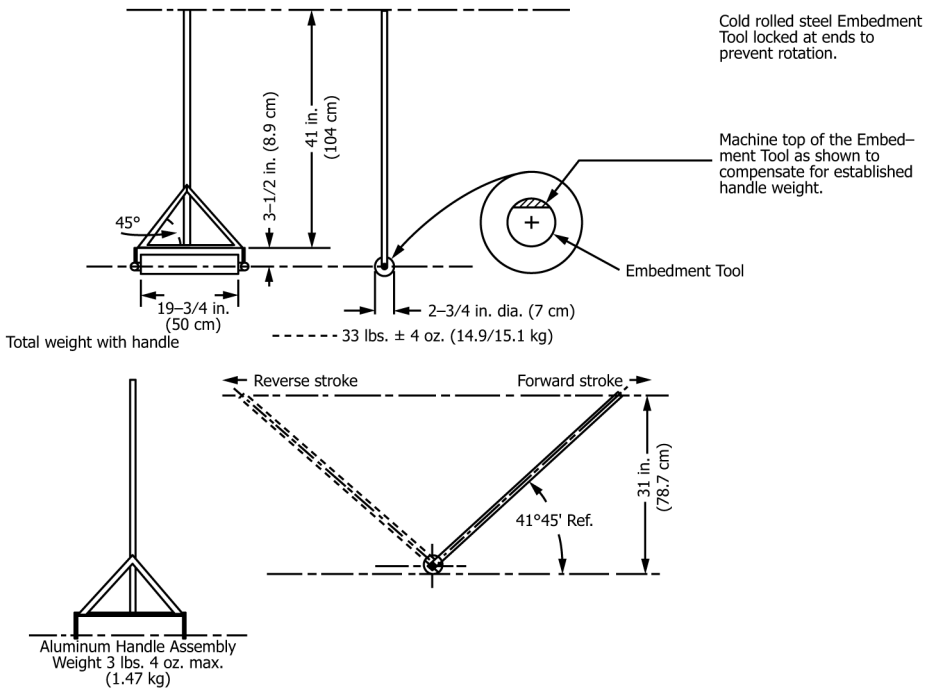

FIG. 1 Dirt Embedment Tool

3.1.4 *sample, n*—a group of vacuum cleaners taken from a large collection of vacuum cleaners of one particular model, which serves to provide information that may be used as a basis for making a decision concerning the larger collection.

3.1.5 *test run, n*—the definitive procedure that produces a singular measured result.

3.1.6 *test unit, n*—a single vacuum cleaner of the model being tested.

4. Significance and Use

4.1 This test method provides a laboratory test for determining the relative carpet dirt removal effectiveness of residential central vacuum cleaning systems when tested under standard conditions and on representative types of carpets.

4.2 This laboratory test method may not give a representation of carpet embedded dirt cleaning effectiveness in the home.

4.3 In order to provide a uniform basis for measuring performance as described in 1.2, standardized test carpets and standardized test dirt are employed in this procedure.

4.4 The results reflect a non-loaded cleaning capability and may not be representative of cleaning capabilities under dirt loading conditions.

5. Apparatus

5.1 *Weighing Scale*[4](for weighing carpets; see 9.1.1.5 and 9.4.5)—The scale must be accurate to 0.035 oz (1 g) and have a weighing capacity of at least 15 lb (6.82 kg).

5.2 *Weighing Scale*[5](for weighing test dirt and non-disposable dirt receptacles; see 9.2.1.2 and 9.4.12)—The scale must be accurate to 0.0035 oz (0.10 g) and have a weighing capacity of at least 1.1 lb (500 g).

5.3 *Stopwatch* with a second hand, or other type of equipment capable of establishing the specified rate of movement and total cycle time.

5.4 *Voltmeter,* to measure input volts to the cleaning system to provide measurements accurate to within ±1 %.

5.5 *Voltage Regulator System,* to control the input voltage to the vacuum cleaner. The regulator shall be capable of maintaining the vacuum cleaner's rated voltage ±1 % and rated frequency having a wave form that is essentially sinusoidal with 3 % max harmonic distortion for the duration of the test.

5.6 *Dirt Embedment Tool,* with the roller locked (see Fig. 1).

5.7 *Dirt Dispenser*—Dispensing system that provides the operator with a method to distribute the test dirt uniformly on the carpet test area.

5.8 *Carpet Conditioning Equipment,* to support the test carpet during new carpet conditioning and the removal of residual dirt from the test carpet before each test run (Fig. 2).

5.9 *Rotating Agitator Conditioning Vacuum Cleaner/Equipment,* for conditioning new test carpets and removing residual dirt from the test carpet before each test run. This cannot be the unit being tested.

NOTE 3—Automated methods for spreading the test dirt, embedding the

[4] The OHAUS Models GT-8000, LB30-CO and 1119D, all available from OHAUS, Inc. Florham Park, NJ, or the equivalent, have been found suitable for this purpose. It is recommended that the scale read directly in grams.

[5] The Mettler-Toledo Model PM 2000, available from Mettler-Toledo, Inc., Box 71, Highstown, NJ, 08520. The OHAUS Model-GT-8000 available from OHAUS, Inc., Florham Park, NJ, or equivalent, have been found suitable for this purpose. It is recommended that the seal read directly in grams.

AVA Documents
Document Sharing Hub

Full document details: ASTM F1284-24

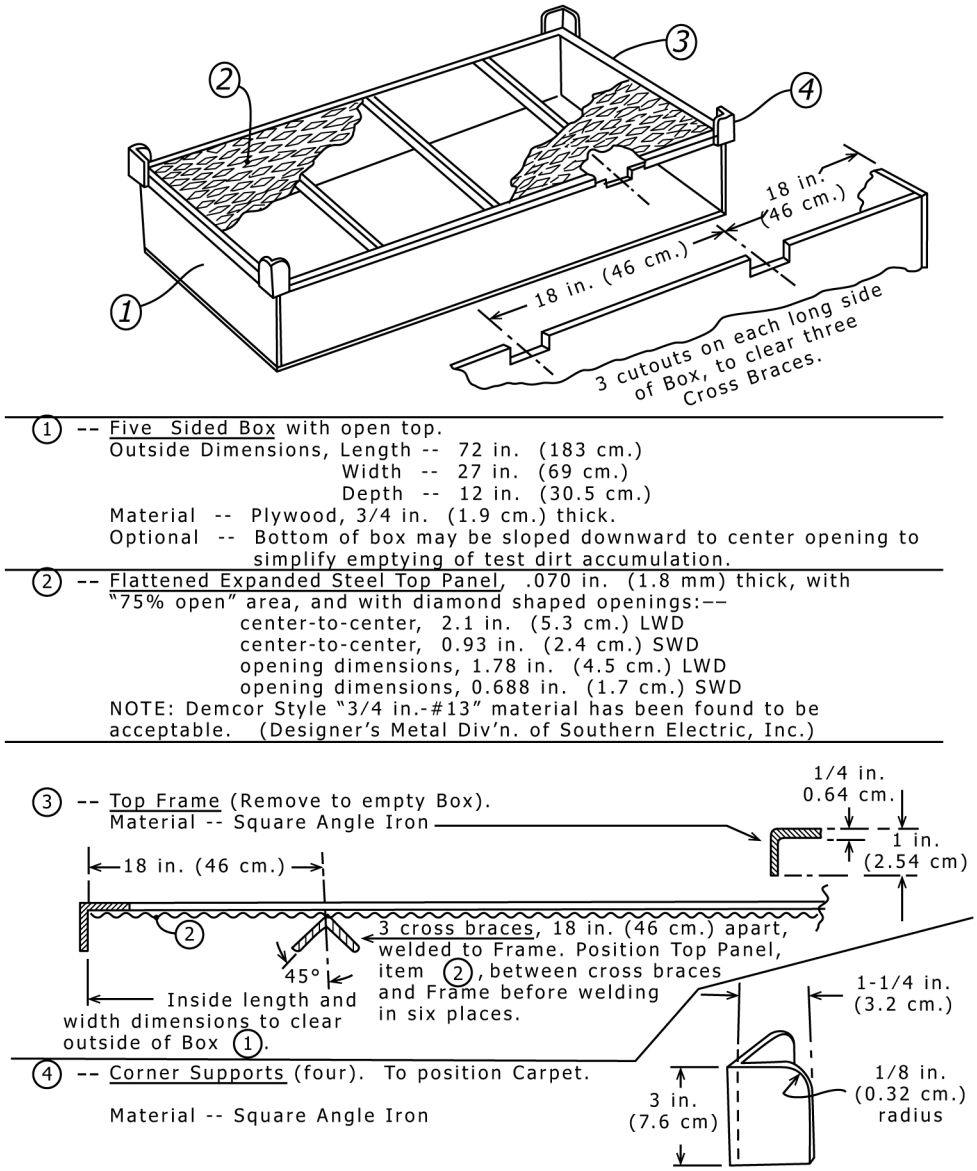

FIG. 2 Carpet Cleaning Rack

test dirt, and cleaning and reconditioning the test carpets are acceptable if they do not change the results of this test method.

5.10 *Temperature and Humidity Indicators,* to provide temperature measurements accurate to within ±1 °F (±½ °C) and humidity measurements accurate to within ±2 % relative humidity.

5.11 *Supporting Surface*—A flat surface consisting of a piece of ¾-in. (19-mm) thick exterior-grade plywood with the "A" surface upward to support the test carpet and pad. If necessary, the four corners (only) of the test carpet and pad may be fastened to the supporting surface by any acceptable means.

5.12 *Rotating Agitator Reference Vacuum Cleaner,* one, for calibrating test carpets (see 9.2.4).

5.13 *Straight-Air Canister Reference Vacuum Cleaner,* one, for calibrating test carpets (see 9.2.4).

5.14 *Orifice Adapter Tube*—See Fig. 3.

6. Materials

6.1 *Standard Carpets,* conforming to Specification F655.

6.2 *Standard Carpet Padding,* conforming to Specification F655.

6.3 *Test Dirt* (see Annex A1).

6.3.1 *Silica Sand*—(see Annex A1).

6.3.2 *Talc*—see (Annex A1).

7. Sampling

7.1 A minimum of three units of the same model vacuum cleaner selected at random in accordance with good statistical practice shall constitute the population sample.

7.1.1 To determine the best estimate of the cleaning ability effectiveness for the population of the vacuum cleaner model

AVA Documents
Document Sharing Hub

Full document details: ASTM F1284-24

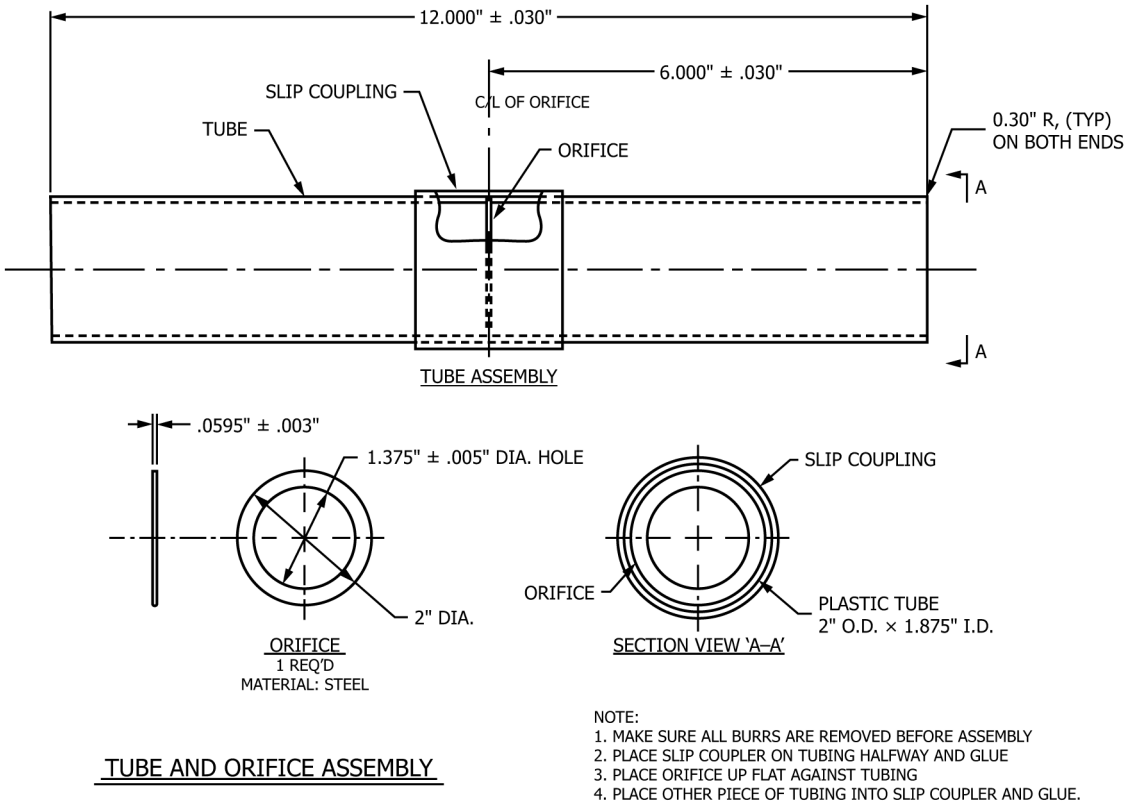

FIG. 3 Orifice Adapter Tube

being tested, the arithmetic mean of the cleaning ability rating of the sample from the population shall be established by testing it to a 90 % confidence level within ±5 % of the mean value of the cleaning ability rating.

7.1.2 Annex A3 provides a procedural example for determining the 90 % confidence level and when the sample size shall be increased.

NOTE 4—See Annex A3 for method of determining 90 % confidence level.

8. Conditioning

8.1 *Test Room*—Maintain the test room in which all conditioning and vacuum cleaner testing is done at 70 °F ± 5 °F (21 °C ± 3 °C) and 45 % to 55 % relative humidity.

8.2 All components involved in the test must remain and be exposed in the controlled environment for at least 16 h prior to the start of the test.

9. Procedure

9.1 *Test Carpet Preparation (see Fig. 4):*

9.1.1 *Preconditioning New Test Carpet Samples:*

9.1.1.1 New Test Carpets shall conform to Specification F655.

9.1.1.2 Cut a sample of each test carpet to a size of 27 in. by 72 in. (690 mm by 1830 mm) minimum. If the warp direction or "lay" of the carpet can be determined, it shall be in the 72 in. direction as indicated in Fig. 5. Carpets shall be bound on all sides.

9.1.1.3 Mark the test area on each carpet as indicated in Fig. 5.

9.1.1.4 *Precondition New Test Carpet Samples:*

(1) Precondition the entire area of the carpet by cleaning with the rotating agitator conditioning vacuum cleaner. Continue the operation until less than 0.07 oz (2 g) of carpet fiber is picked up in 5 min.

(2) Run ten carpet-embedded dirt removal effectiveness test runs in accordance with Sections 9.4.6 – 9.4.19.

NOTE 5—Recondition the new test carpet following each preconditioning test run. It is not necessary, however, to meet the requirements set forth in 9.1.2.1 with respect to the preconditioned weight.

9.1.1.5 Weigh and record the preconditioned weight of the carpet.

9.1.1.6 Run a test carpet calibration in accordance with Section 9.3.

9.1.2 *Reconditioning Used Test Carpet Samples:*

9.1.2.1 Initial Daily Reconditioned Weight: At the beginning of each day, it is necessary to remove any dirt that may have settled on the carpet surface and stabilize the moisture content of the carpet. Clean the carpet with a rotating agitator conditioning vacuum cleaner until its weight does not exceed the initial reconditioned weight from the previous day of testing by more than 0.07 oz (2 g) or less than 0.035 oz (1 g) is picked up by the conditioning vacuum cleaner using the procedure in 9.1.2.3.

9.1.2.2 Following each test run, it is necessary to remove the residual dirt and stabilize the moisture content of the carpet.

AVA Documents
Document Sharing Hub

Full document details: ASTM F1284-24

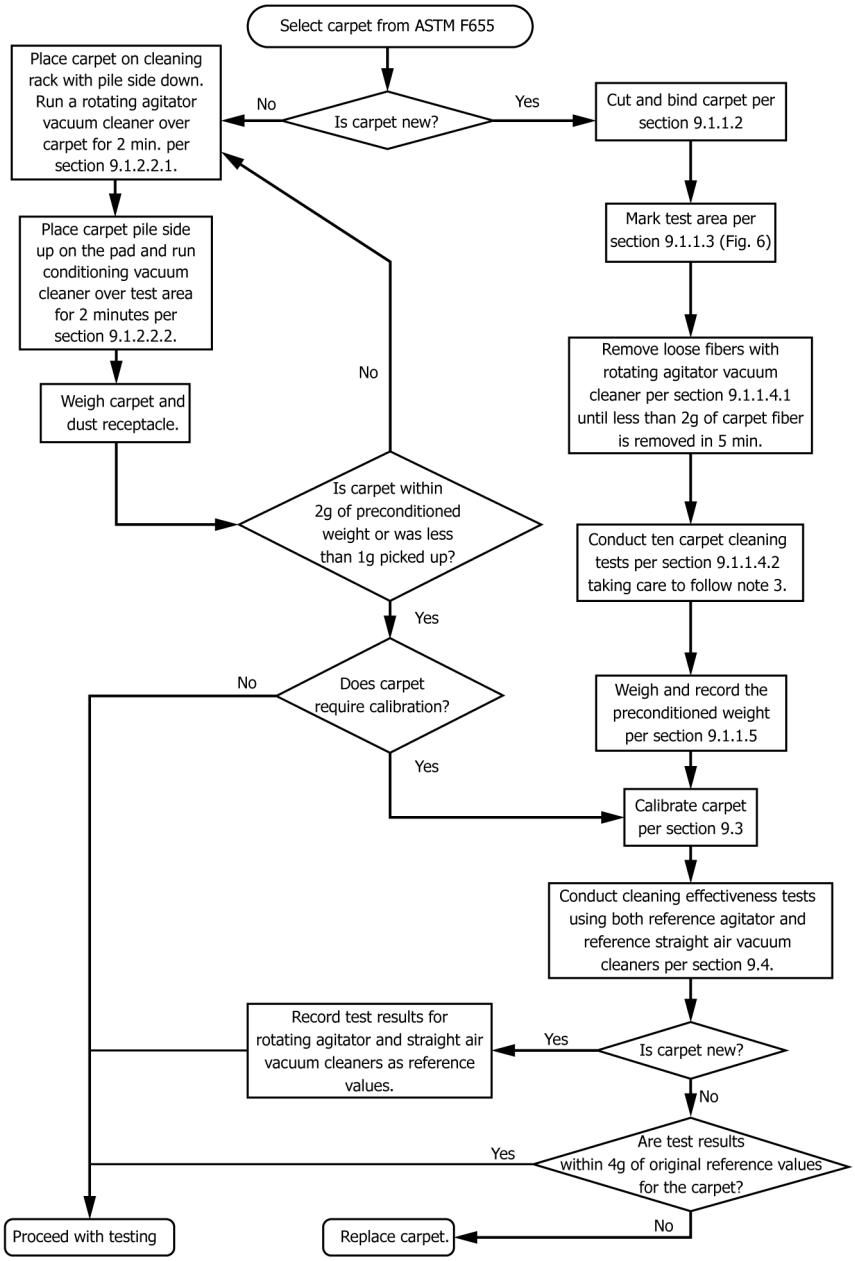

FIG. 4 Carpet Conditioning/Calibration Procedure

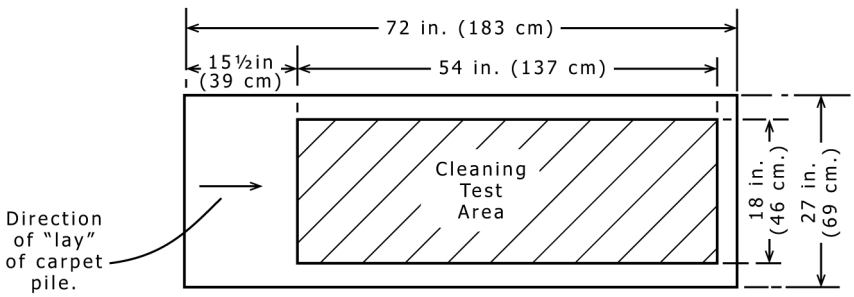

NOTE 1—Cleaning test area should be positioned as shown. First forward stroke of rotating agitator or carpet is in direction *with* lay of carpet.

FIG. 5 Test Carpet

Clean the carpet with a rotating agitator conditioning vacuum cleaner until its weight does not exceed the initial daily

AVA Documents
Document Sharing Hub

Full document details: ASTM F1284-24