Designation: F1319 – 94 (Reapproved 2011)

# Standard Test Method for Determination of Abrasion and Smudge Resistance of Images Produced from Business Copy Products (Crockmeter Method)[1]

This standard is issued under the fixed designation F1319; the number immediately following the designation indicates the year of original adoption or, in the case of revision, the year of last revision. A number in parentheses indicates the year of last reapproval. A superscript epsilon (ε) indicates an editorial change since the last revision or reapproval.

## 1. Scope

1.1 This test method describes a procedure for determining the amount of image transferred onto the surface of a white cloth by rubbing.

1.2 The test method can be employed to evaluate the abrasion and smudge resistance of business imaging products produced by impact printers, thermal transfer printers, and non-impact printers or copiers.

1.3 The test method can be used to evaluate the amount of material removed from the sample (smudge or crock). Testing focuses on determining the amount of material deposited on the crockmeter cloth or redeposited in a new location on the sample. The test method can also be employed to measure performance characteristics for a product. The user should select test equipment which is appropriate for measuring the abrasion to the samples. Samples are tested before and after rubbing and comparisons of results made. In this test method product performance evaluations are optional.

1.4 Other test methods employing the Sutherland rub tester, Taber Abrader and Gavarti GA-C.A.T. can be employed to evaluate the smudge and abrasion characteristics. Results by these units are not necessarily equivalent to those obtained with the Crockmeter.

1.5 *This standard does not purport to address all of the safety concerns, if any, associated with its use. It is the responsibility of the user of this standard to establish appropriate safety and health practices and determine the applicability of regulatory limitations prior to use.*

## 2. Referenced Documents

2.1 *ASTM Standards:*[2]

F335 Terminology Relating to Electrostatic Imaging

F360 Practice for Image Evaluation of Electrostatic Business Copies

F497 Practice for Use of the Electric and Electronic Typewriter as a Test Instrument

F1174 Practice for Using a Personal Computer Printer as a Test Instrument

F1175 Practice for Using the Computer Impact Print-Out Unit as a Test Instrument for Manifold Comparison

2.2 *ANSI Standards:*[3]

IT2.17–95 Density Measurements-Geometric Conditions for Reflection Density

PH2.18 Density Measurements-Special Conditions

## 3. Terminology

3.1 *Definitions:*

3.1.1 *abrasion resistance*—the ability of an image to withstand the frictional forces attempting to remove the surface material.

3.1.2 *crock*—material transferred by rubbing from an imaged sample onto a cloth patch.

3.1.3 *smudge*—the tendency of an image to smear or streak onto an adjacent area when rubbed. Smudge involves the redeposition of abraded material.

3.1.4 *smudge resistance*—the ability of an image to withstand smudging.

[1] This test method is under the jurisdiction of ASTM Committee F05 on Business Imaging Products and is the direct responsibility of Subcommittee F05.04 on Electrostatic Imaging Products.

Current edition approved Oct. 1, 2011. Published September 2012. Originally approved in 1990. Last previous edition approved in 2005 as F1319–94 (2005). DOI: 10.1520/F1319-94R11.

[2] For referenced ASTM standards, visit the ASTM website, www.astm.org, or contact ASTM Customer Service at service@astm.org. For *Annual Book of ASTM Standards* volume information, refer to the standard's Document Summary page on the ASTM website.

[3] Available from American National Standards Institute, 25 West 43rd Street, 4th floor, New York, NY 10036.

Copyright © ASTM International, 100 Barr Harbor Drive, PO Box C700, West Conshohocken, PA 19428-2959. United States



Documents
Document Sharing Hub

Full document details: ASTM F1319-94(2011)

3.1.5 General definitions related to electrostatic copying can be found in Terminology F335.

## 4. Summary of Test Method

4.1 This test method is used to evaluate the degree of image transfer (crock) from a solid imaged area to the surface of a white, cotton cloth patch by linear rubbing. The degree of image transfer to the cloth is measured by reflectance optical densitometry or reflectometry. Alternatively, the imaged business copy product can be evaluated for performance characteristics.

## 5. Significance and Use

5.1 The degree of image transferred by rubbing (crock) from a copy or printed image can be affected by various factors including the type of machine, the condition of the machine, supplies employed, time since imaging (ribbons) and environmental conditions. As many as possible of these variables should be controlled during the test. A control sample with known characteristics, if available, should be run along with the test samples.

5.2 The test is designed to simulate the type of damage resulting from paper rubbing against the printed image.

5.3 The test method can be used for control of product quality as well as a research and development tool.

5.4 The method is adaptable to images produced from most types of impact and non-impact printers and copiers.

5.5 Two different printers employing the same technology may yield prints with variations in optical densities. It may be possible to remove more toner or ink from the darker image yet the performance of the smudged image may be satisfactory. An optional evaluation procedure is available whereby the functional properties of the smudged or abraded image is examined if this is of primary concern.

## 6. Interferences

6.1 The crock (or smudge) resistance of large, solid filled areas may be different than the crock resistance of smaller print areas and lines such as normally encountered in text and line graphics printing.

6.2 Certain areas on a copy or print may be more sensitive to image damage or removal than others. This is dependent upon certain machine design characteristics which vary from one machine model to another.

6.3 Resistance to abrasive damage of images can also vary as a function of the sequential position of a given print or copy in a series of prints or copies. For example, the image abrasion resistance of the third copy of a run of 20 copies on a given machine may be different from that of the fifteenth copy of that same run.

6.4 Variations in the optical densities of the test samples can affect the crock results. For best results, the range in optical densities of the samples should be limited to 0.2.

6.5 The fusing temperature of the laser printer, copier or other toner-based unit will affect the degree of abrasion and smudge resistance. If the temperature is low, the toner will be incompletely fused to the substrate and will be easily removed.

6.6 If the temperature of the head on a thermal transfer printer is low, the image will be incompletely affixed to the substrate. The image will be easily abraded or smudged.

## 7. Apparatus

7.1 *Rub Tester* modified with an aluminum sliding arm in place of the original steel arm (see Fig. 1). The mass of the arm is approximately 450 g (±5 %) and has the same dimensions as the original. The weight of the finger onto the test material is approximately 300 g (±5 %).

7.2 *Test Cloth,* 80 by 84 fibers/in.$^2$ combed cotton, desized, bleached with no optical brightener or finishing material present.

7.3 *Densitometer* or reflectometer with calibration plate meeting the requirements for daytime luminous reflectance of ANSI IT2.17–95 and PH2.18. A 2 to 4 mm aperture is recommended.

7.4 Abrasive paper, 400 grit, waterproof silicon carbide or equivalent to prevent slippage of test specimen during test.

7.5 *Optional*—Other test equipment which measures specific performance characteristics such as MICR testers, OCR readers and bar code verifiers.

## 8. Materials

8.1 *Test Samples for Copiers or Printers Which Can Operate as Copiers:*

8.1.1 The target should contain a section which will provide a solid image of dimensions 5½ by ½ in. (14.0 by 1.3 cm), minimum. The target should be prepared according to Practice F360. The maximum test sample image optical density may not be produced by some copiers unless the optical density of the test target is at least 1.6.

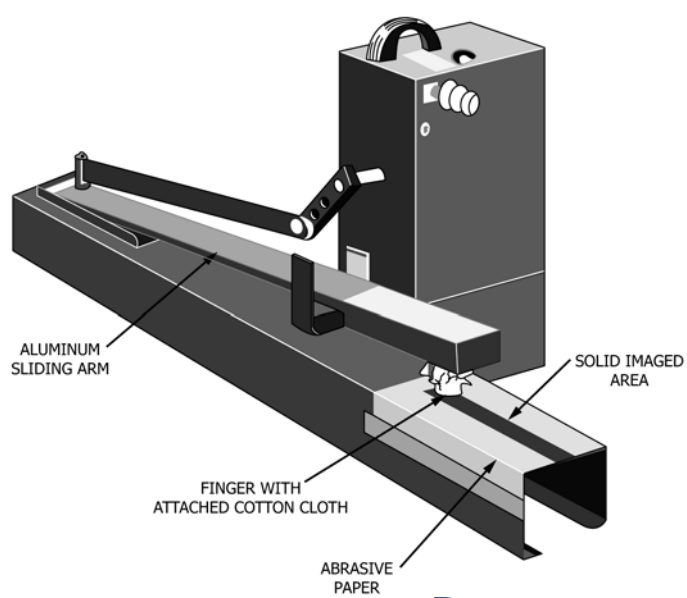


FIG. 1 Crockmeter

AVA Documents
Document Sharing Hub



Full document details: ASTM F1319-94(2011)