Designation: F1405 – 08 (Reapproved 2013)

Standard Test Method for Determining the Dynamic Thermal Response of Direct Thermal Imaging Products—Atlantek Method[1]

This standard is issued under the fixed designation F1405; the number immediately following the designation indicates the year of original adoption or, in the case of revision, the year of last revision. A number in parentheses indicates the year of last reapproval. A superscript epsilon (ε) indicates an editorial change since the last revision or reapproval.

1. Scope

1.1 This test method covers the measurement of thermal response of various direct thermal imaging papers or other thermal-coated substrates used for facsimile, labels, medical recorders, plotters, and printers.

1.2 The Atlantek Thermal Response Tester Model 200 described in this test method may be used for specification acceptance, product development, and research applications.

1.3 The values stated in inch-pound units are to be regarded as standard; values specific to the Atlantek Thermal Response Tester Model 200 are in SI units.

1.4 *This standard does not purport to address all of the safety concerns, if any, associated with its use. It is the responsibility of the user of this standard to establish appropriate safety and health practices and determine the applicability of regulatory limitations prior to use.* For specific precautionary statements, see Section 8.

2. Referenced Documents

2.1 *ASTM Standards:*[2]

D685 Practice for Conditioning Paper and Paper Products for Testing

E691 Practice for Conducting an Interlaboratory Study to Determine the Precision of a Test Method

F1623 Terminology Relating to Thermal Imaging Products

2.2 *ANSI Standards:*[3]

PH 2.17 Density Measurements—Geometric Conditions for Reflection Density

PH 2.18 Density Measurements—Spectral Conditions

2.3 *Operators Manual:*

Atlantek Operators Manual for Model 200 Thermal Response Test System[4]

3. Terminology

3.1 *Symbols:*

3.1.1 T_{cycle}—the time between printed lines. The larger the T_{cycle} value, the more time between printed lines. The result is slower print speeds. Smaller T_{cycle} values correspond to faster print speeds. Time between printed lines equals dot "on" time plus dot "off" time ($T_{cycle} = T_{on} + T_{off}$).

3.1.2 T_{on}—the amount of time that the heating elements (dots) on the printhead are energized. Typically, this value is in milliseconds. T_{on} is also called strobe time.

4. Summary of Test Method

4.1 This test method involves imaging direct thermal product using an Atlantek Model 200 Thermal Response Test System. The system is designed to provide thermal response measurements using printheads commonly used in facsimile units, label printers, medical recorders, plotters, and other printers. This system is based on a special purpose controller board which drives a standard thermal printhead and a programmable stepping drive controller. This system includes provisions for mounting standard performance printheads. A personal computer controls the system with parameter programming accomplished from menu-driven software designed specifically for thermal response and performance characterizations.

4.2 To determine thermal response, thermal product in roll or sheet form is fed into the printer. From the Main Menu, the test system is configured to the Test Mode. Again from the Main Menu, Execute a Test is chosen. A standard existing test file can then be loaded and the New Test can be given a file name or default standard test conditions can be used. The test thermal product (media) is identified, printhead voltage set, and the test executed. Densitometer measurements can then be entered into the test file (manually or automatically). Data in

[1] This test method is under the jurisdiction of ASTM Committee F05 on Business Imaging Products and is the direct responsibility of Subcommittee F05.06 on Carbonless and Thermal Imaging Products.

Current edition approved April 1, 2013. Published April 2013. Originally approved in 1992. Last previous edition approved in 2008 as F1405 – 08. DOI: 10.1520/F1405-08R13.

[2] For referenced ASTM standards, visit the ASTM website, www.astm.org, or contact ASTM Customer Service at service@astm.org. For *Annual Book of ASTM Standards* volume information, refer to the standard's Document Summary page on the ASTM website.

[3] Available from American National Standards Institute (ANSI), 25 W. 43rd St., 4th Floor, New York, NY 10036, http://www.ansi.org.

[4] Available from Printrex, 276 East Gish Rd., San Jose, CA 95112, http://www.printrex.com/.

Copyright © ASTM International, 100 Barr Harbor Drive, PO Box C700, West Conshohocken, PA 19428-2959. United States

Documents
Document Sharing Hub
Full document details: ASTM F1405-08(2013)

the test file created can then be used to graphically display the thermal response of the test thermal product.

5. Significance and Use

5.1 The Atlantek test system allows simulation of direct thermal printers in the marketplace. Thus, this system is useful in matching direct thermal product performance to various printer configurations.

5.2 This test system is useful for new product development. Direct thermal printer manufacturers can design print control algorithms to match particular thermal imaging products. Thermal imaging product manufacturers can formulate and design products (media) to provide a match with certain printer designs.

5.3 Manufacturing process control can make thermal response comparisons relative to process changes.

5.4 Customers for thermal products can use this test method to compare supplies from various manufacturers.

5.5 The test system can be used to evaluate thermal response of facsimile, label, medical recorder, plotter, and other direct thermal products (media).

5.6 Performance differences between printheads and media combinations can be measured and presented graphically.

6. Interferences

6.1 Testing under controlled environmental conditions is recommended. Wide variations in temperature and relative humidity can effect image density measurements.

6.2 Printhead loading and alignment is important to achieve reliable and reproducible results.

6.3 When testing new and experimental coatings, the printhead must be visually inspected for any residue or buildup and cleaned if required. Residue may prevent intimate printhead contact with the thermal imaging surface, resulting in lower image density and may cause printhead damage.

6.4 Thermal products are sensitive to prolonged exposure to light and should be protected from exposure prior to testing.

7. Apparatus

7.1 *Atlantek Thermal Response Test System,* Model 200.[4]

7.2 *IBM PC/AT,* or true compatible with the following configuration: 512K RAM minimum, 12 mhz clock, 20 megabyte hard disk, 1.2 M floppy disk, standard keyboard, monochrome or color system, parallel port (two required for plotting option) and serial port (two required for automatic densitometer readings).

7.3 *Densitometer,* Macbeth Model RD-914 (spectral response: black and white, visual) or equivalent. A serial interface is required for entering density measurements automatically to the test data file.

7.4 *Software,* Tech*Graph*Pad or equivalent (optional for plotting graphs).

7.5 *Plotter,* HP Colorpro with Centronics parallel printer or equivalent to prepare graphs.

8. Hazards

8.1 *Printhead Voltage*—Keep applied voltage at or below that specified for each printhead to avoid printhead damage. Before powering up the system and applying power, the voltage adjustment knob on the front panel should be turned fully counter-clockwise. This ensures that applied voltage will be below the maximum value recommended for the printhead.

8.2 The T_{cycle} value must be at least four times the T_{on} value when in full-width printing mode or two times the T_{on} value in reduced-width mode. The operating system software checks for this value.

8.3 Maximum T_{on} varies with printhead resistance. See the table from the Atlantek Operators Manual for supplied printhead to ensure that the maximum value is not exceeded.

8.4 Prior to running a nonstandard test, consult documentation for each printhead with regard to maximum recommended T_{on}, energy, and printhead voltages.

8.5 *Changing Printheads—Never* attempt printhead replacement with the power on. The printhead should first be electrically disconnected from the printer by removing the printhead interface and printhead power connectors on the left side panel of the mechanism.

8.6 *Computer Connections*—Do not make or break any connections while the computer is powered up.

9. Test Specimen

9.1 The test specimen (media) shall be sheets or a roll of thermal product which has not been adulterated since it was manufactured.

9.2 Test specimens in sheet form should be cut into individual strips 8½ in. wide with a recommended length of 13 in. (minimum length is 11 in.).

9.2.1 If test specimens are less than 8½ in. in width with a minimum width of 4 in., they can be tested by enabling Reduced Width and Narrow Header. To initiate this change from the Test Menu, strike F8, Configure Output Image.

10. Calibration and Standardization

10.1 *Densitometer*—Calibrate the densitometer in accordance with the manufacturer's recommendations.

10.2 *Printhead Dot Line Alignment*—Adjust the printhead dot line alignment over the platen roller and set in accordance with the manufacturer's recommendations.

10.3 *Printhead Pressure*—Measure the printhead pressure with a force gage and set in the range from 7 to 8.5 lb (see Note 1). The pressure measurement is not precise. If the pressure is in this range, do not adjust.

11. Conditioning

11.1 Although no special conditioning of thermal product samples is required, it would be prudent to compare only tests run under the same environmental and aging conditions (see Method D685).

NOTE 1—Since the nominal printhead width is 8.5 in., the pressure should be 0.8 to 1.0 lb/linear in.

AVA Documents
Document Sharing Hub

Full document details: ASTM F1405-08(2013)

12. Establishment of Test Parameters

12.1 *ROHM KF2008-B1 and Kyocera KST-216-8MPD1 Thermal Printheads*—See the table from the Atlantek Operators Manual for recommended nominal printhead voltages for various resistances of the supplied printheads. Set T_{cycle} and T_{on} as specified for each printhead and set printhead temperature at 27.5°C (Head Heating–On).

NOTE 2—There is no provision for printhead cooling.

13. Procedure

13.1 With the computer powered up and the printer switched on, the Entry Screen will appear on the monitor. Select Thermal Response Test and strike the Enter key.

NOTE 3—Before striking the Enter key again, insert a formatted, high-density diskette into Drive A. This diskette is required for test and data storage.

13.2 The next screen message is to switch on the thermal response test system before striking the Enter key. Striking any other key will return the program to DOS.

13.3 Upon striking the Enter key, the computer will check for the presence of a formatted diskette in Drive A and present the Main System Menu. The monitor screen will appear as shown in Fig. 1.

13.4 *Configure Test System*—Choose Configure Test System by striking the F8 key. The screen will appear as shown in Fig. 2. From this menu, select Option F1, Enable Test System. Strike the F1 key and the screen will return to the Main System Menu.

13.5 *Test Specimen Loading*—The software test program refers to the thermal product test specimen as media.

13.5.1 *Roll Form*—See Fig. 3 for a side view of the test apparatus. Support the media roll on the spindle and thread the media under the metal bar (C) and between the printhead assembly and platen roller. The thermal imaging surface must be facing up. When roll media threading is complete, align the media under the printhead. Next, rotate the cam lever down to place the printhead in contact with the media imaging surface.

```
                                   Head Measurements:
                                        22.5 Volts
                                        27.5 Deg C
Atlantek Thermal Response Test System

      MAIN SYSTEM MENU

    Choose from:

        F1  - Execute a Test
        F2  - Print Single Test Pattern
        F3  - Test File Editor
        F4  - Directory of Test Files
        F5  - View a Test File
        F6  - View default parameters
        F7  - Invoke PLOT Utility
        F8  - Configure Test System
        F9  - Exit from Tester

Using Function keys
```

FIG. 1 Main System Menu

```
                                   Head Measurements:
                                        22.5 Volts
                                        27.5 Deg C
CONFIGURE TEST SYSTEM

Choose from:

 F1  - Enable TEST System
 F2  - Enable SAMPLE Mode
F10  - Return to MAIN MENU

Using Function keys
```

FIG. 2 Configure Test System

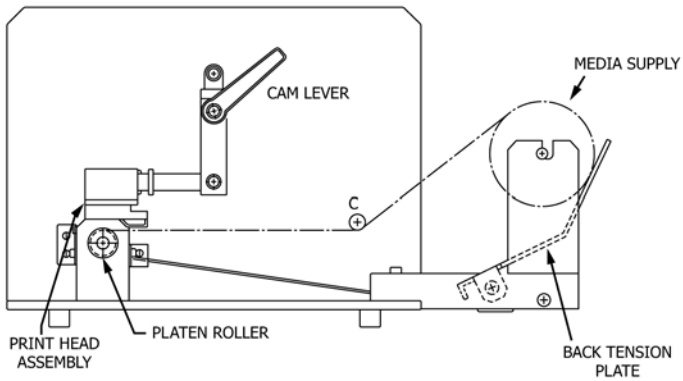

FIG. 3 Atlantek Model 200 (Side View) Test Specimen (Media) Loading—Roll Form

13.5.2 *Sheet Form*—Loading the media is similar to the procedure described in 13.5.1. Again the thermal imaging surface must be facing up and a little more care is needed to properly align the media between the printhead assembly and platen roller. When sheet threading is complete, rotate the cam lever down to place the printhead in contact with the media imaging surface.

13.6 *Execute a Test*—Choose Execute a Test by striking the F1 key. The following prompt will appear:

You may now load an existing file or define a new file by typing in a File Name of up to 8 alphanumeric characters:

13.6.1 Name a new test file and enter test parameters established in Section 12 or recall an existing test file with established test parameters.

13.6.2 If the file name is not found on the diskette, the screen will go directly to the Test Menu which will display the standard default settings for the installed printhead.

13.6.3 If the file name is found on the diskette, the following screen prompt will appear:

The parameters have been loaded from the existing file, please type the name of the file into which you wish to save this test (up to 8 alphanumeric characters):
Type New File Name: _____

Upon entering the new file name, the Test Menu will appear on the screen.

AVA Documents
Document Sharing Hub

Full document details: ASTM F1405-08(2013)