This international standard was developed in accordance with internationally recognized principles on standardization established in the Decision on Principles for the Development of International Standards, Guides and Recommendations issued by the World Trade Organization Technical Barriers to Trade (TBT) Committee.

Designation: F1414 – 19 (Reapproved 2023)

Standard Test Method for Measurement of Cut Resistance to Chainsaw in Lower Body (Legs) Protective Clothing[1]

This standard is issued under the fixed designation F1414; the number immediately following the designation indicates the year of original adoption or, in the case of revision, the year of last revision. A number in parentheses indicates the year of last reapproval. A superscript epsilon (ε) indicates an editorial change since the last revision or reapproval.

1. Scope

1.1 This test method measures cut resistance of garments and devices worn to protect the lower body (legs) when operating a chainsaw.

1.2 This test method may be used to test for compliance to minimum performance requirements in established safety standards.

1.2.1 By agreement between the purchaser and the supplier, or as required by established safety standards, it will be decided if this test method will be used to determine one or both of the following: (*1*) chain speed 50 (CS50), and (*2*) success/failure (jamming/chain stop or no cut in less than 1.5 s) at specified chain speed.

1.3 This test method may be used to determine levels of protection for areas of coverage as stipulated in established safety standards.

1.4 The values stated in SI units are to be regarded as standard.

NOTE 1—The values stated in each system may not be exact equivalents; therefore, each system must be used independently of the other, without combining values in any way.

1.5 *This standard does not purport to address all of the safety concerns, if any, associated with its use. It is the responsibility of the user of this standard to establish appropriate safety, health, and environmental practices and determine the applicability of regulatory limitations prior to use.*

1.6 *This international standard was developed in accordance with internationally recognized principles on standardization established in the Decision on Principles for the Development of International Standards, Guides and Recommendations issued by the World Trade Organization Technical Barriers to Trade (TBT) Committee.*

2. Referenced Documents

2.1 The following documents form a part of this test method to the extent referenced herein:

2.2 *ASTM Standards:*[2]

D123 Terminology Relating to Textiles

D1056 Specification for Flexible Cellular Materials—Sponge or Expanded Rubber

D1776/D1776M Practice for Conditioning and Testing Textiles

F1494 Terminology Relating to Protective Clothing

2.3 *Military Standard:*[3]

MIL-STD-105 Sampling Procedures and Tables for Inspection by Attributes

2.4 *Federal Standard:*[3]

FS 5100-86 Type II, Cloth, Duck, Nylon, Polyurethane Coated

3. Terminology

3.1 *Definitions:*

3.1.1 *chainsaw, n*—a portable, power-operated tool used for cutting wood which has cutters linked in a chain.

3.1.2 *chain speed, n*—the speed of synchronized movement of linked cutters around a guide bar and sprocket.

3.1.3 *chain speed 50 (CS50), n—for chainsaw protection*, the mean speed at which cut-through occurs.

3.1.3.1 *Discussion*—This value establishes the relationship between the probability of cutting through the protective clothing (or foot protective device) and the speed of the saw chain. For lower chain speeds, the probability of cut-through approaches zero, while for higher chain speeds, the probability of cut-through approaches one.

3.1.4 *chain stop, n*—the resulting action when a material clogs (jams) the drive sprocket or slows the speed sufficiently to prevent advancement of the saw chain.

[1] This test method is under the jurisdiction of ASTM Committee F23 on Personal Protective Clothing and Equipment and is the direct responsibility of Subcommittee F23.20 on Physical.

Current edition approved Nov. 1, 2023. Published November 2023. Originally approved in 1992. Last previous edition approved in 2019 as F1414 – 19. DOI: 10.1520/F1414-19R23.

[2] For referenced ASTM standards, visit the ASTM website, www.astm.org, or contact ASTM Customer Service at service@astm.org. For *Annual Book of ASTM Standards* volume information, refer to the standard's Document Summary page on the ASTM website.

[3] Available from DLA Document Services, Building 4/D, 700 Robbins Ave., Philadelphia, PA 19111-5094, http://quicksearch.dla.mil.

Copyright © ASTM International, 100 Barr Harbor Drive, PO Box C700, West Conshohocken, PA 19428-2959. United States

Documents
Document Sharing Hub
Full document details: ASTM F1414-19(2023)

3.1.5 *cut resistance, n—in chainsaw testing,* the ability of a material, while in contact with the linked cutters, to resist cut-through of the cutters of a moving saw chain independent of either jamming or chain stop.

3.1.6 *cut-through, n—for chainsaw cut resistance*, the action of a running chainsaw after complete breakthrough of either a protective garment or protective device.

3.1.6.1 *Discussion*—When a cut-through is effected, speed of the saw chain must be measured.

3.1.7 *jamming, n—for chainsaw cut resistance*, the clogging action manifested by a protective garment or a device that can produce a chain stop.

3.1.8 *lower body, n*—that part of the human body which includes all portions between the waist and feet, not to include the feet.

3.1.9 *protective clothing, n*—an item of clothing that is specifically designed and constructed for the intended purpose of isolating all or part of the body from a potential hazard, or isolating the external environment from contamination by the clothing.

3.1.9.1 *Discussion*—For chainsaw cut-resistant protective clothing, the potential hazard is exposure to a running power saw chain.

3.1.10 *saw chain, n*—a closed loop of cutters linked together for use in a portable, power-operated tool.

3.2 For definitions of other textile terms used in this test method, refer to Terminology D123.

3.3 For definitions of other protective clothing terms used in this test method, refer to Terminology F1494.

4. Summary of Test Method

4.1 Test specimens are securely mounted on a test apparatus which simulates a human leg.

4.2 A chainsaw, of specific characteristic and operating at a designated speed, is brought into contact with the test specimen.

4.2.1 The cutting action of the saw chain will achieve one of the following results: (*1*) complete cut-through with chain stop, (*2*) complete cut-through without chain stop, (*3*) no cut-through with a chain stop, or (*4*) no cut-through without a chain stop.

4.3 Chain speed is measured electronically just prior to contact with test specimen. Chain speed is adjusted and reported based on these measurements.

NOTE 2—Materials may be characterized by repeated testing at different speeds, followed by a calculation of CS50. Alternatively, for quality control, results may be reported as pass or fail at one pre-selected chain speed.

5. Significance and Use

5.1 The purpose of this test method is to provide a measurable criterion of performance about the level of cut resistance provided by different types of protective garments and protected coverings worn by chainsaw operators.

5.2 This test method is intended to show to what level a protective garment can offer resistance to the cutting action of a chainsaw.

5.3 The protection which can be demonstrated by the garments and coverings tested in accordance with this test method is achieved by: (*1*) the cut resistance of the material to cutting when put in contact with saw chain; (*2*) pulling a part of the material or yarns in the material so that they are drawn into the chain and drive mechanism to block the chain movement; (*3*) the fibers of the materials used to demonstrate both high resistance to cutting and the capacity to absorb rotational energy, so that chain speed can be slowed down sufficiently to stop the movement of the saw chain; or (*4*) any combination of these.

5.4 This test method does not purport to evaluate comfort of lower body protective garments.

5.5 In case of a dispute arising from differences in reported test results when using this test method for acceptance testing of commercial shipments, the purchaser and the supplier should perform comparative tests to determine if there is a statistical bias between their laboratories. Competent statistical assistance is recommended for the investigation of bias. As a minimum, the two parties should take a group of test specimens from the same lot of components to be evaluated. The test specimens should then be randomly assigned in equal numbers to each laboratory for testing. If a bias is found, either its cause must be determined and corrected or the purchaser and the supplier must agree to interpret future test results in light of the known bias.

6. Apparatus[4]

6.1 Apparatus consists of three main components:

6.2 *Specimen Holder:*

6.2.1 A stationary wooden cylinder having a diameter of 150 mm (6 in.) and a minimum length of 350 mm (14 in.) (see Fig. 1).

6.2.1.1 The cylinder is covered with a vinyl nitrile foam having a thickness of 18 mm (0.71 in.) (see Fig. 1). This covering shall have a density between 55 and 80 kg/m^2 and its resistance to a 25 % compression shall be between 10 and 20 kPa measured in accordance with the testing procedure in Specification D1056.

NOTE 3—Ensolite M, a synthetic foam rubber made of PVC and NBR, meets the requirements stipulated in Specification D1056.

6.2.1.2 Two specimen attachment plates, each secured by two screws to the wooden cylinder parallel to the axis of that cylinder. Each plate is 75 by 25 mm (3 by 1 in.) (see Fig. 1).

6.2.1.3 The stationary wooden cylinder shall be attached to a swivel mechanism that allows the mandrel to be moved to an angle of either 45° or 90° to the vertical plane of the guide bar. Specimen must be securely attached to mandrel to prevent movement of specimen.

[4] See Appendix X1 to review maintenance checklist.

AVA Documents
Document Sharing Hub

Full document details: ASTM F1414-19(2023)

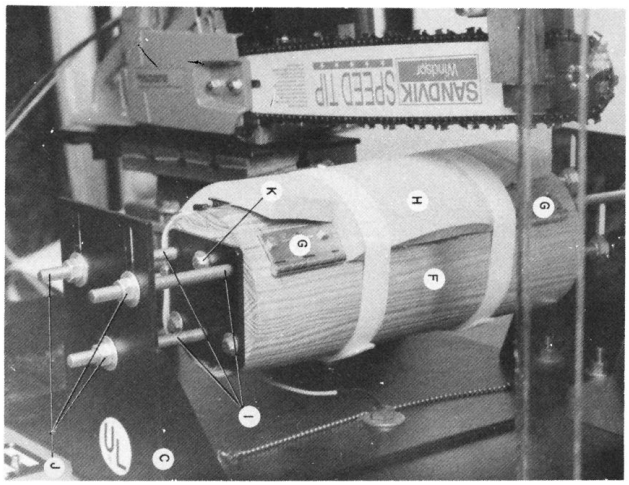

Item	Quantity	Description
A	1	steel plate 0.25 by 576 by 670 mm
B	2	steel plate 0.25 by 216 by 375 mm
C	2	steel plate 0.25 by 208 by 216 mm
D	1	steel tube 0.75 by ID – 1 mm OD by 172 mm
E	1	aluminum plate 0.5 by 4 by 14.5 mm
F	1	hardwood or white pine 152 by 400 mm
G	2	hinge 3 by 3 by 1⁄16 in.
H	1	foam pad 15 by 180 by 360 mm + glue
I	6	threaded rod 0.40 by 16 by 120 mm
J	12	bolt 0.40 by 16 mm
K	8	wood screw 8 by 0.75 mm TR
L	1	steel axle 0.75 mm diameter × 350 threaded 0.75 mm × 10 mm × 80 mm at each end
M	2	pillow block VPS112 valuline browing
N	5	bolt 0.75 by 10 mm
O	1	hex bolt 0.75 by 10 by 70 mm
P	1	square 30 mm × 90 mm × 3⁄16 × 75L
Q	1	stopping block 20 mm × 40 mm × 60L
R	1	lever support 3⁄16 × 80 mm × 130 mm
S	1	lever 0.25 by 60 by 120 mm
T	1	axle 0.250
U	1	compression spring
V	1	micro-switch
W	1	safety shield pivoting on D

NOTE 1—Measurements are in millimeters. Arcs of a circle are measured on the circumference of the wood cylinder.

FIG. 1 Specimen Holder (Front View Facing Chainsaw)

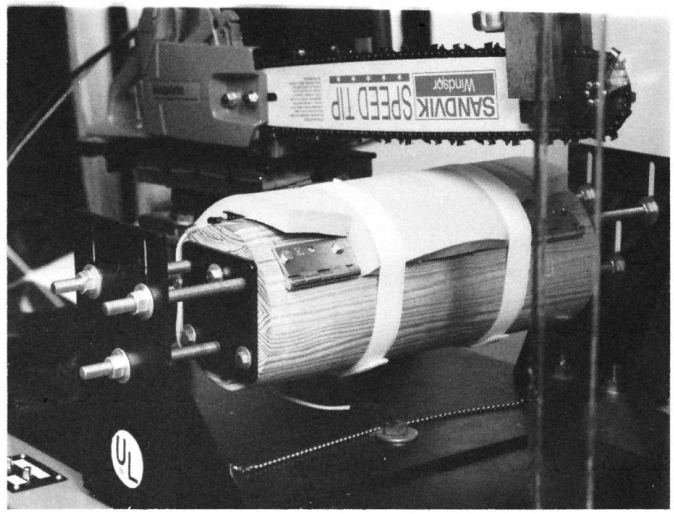

FIG. 2 Specimen Holder (Attachment and Positioning)

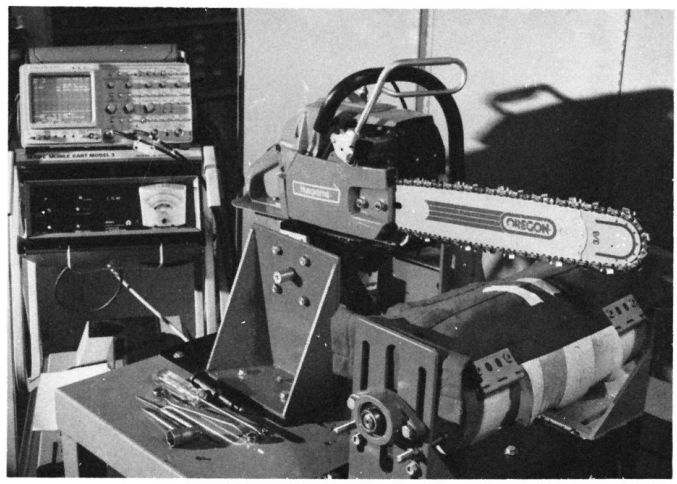

FIG. 3 Post Contact with Specimen (Front View) and Data Acquisition System

6.3 *Chainsaw and Related Equipment:*[5,6]

6.3.1 *Saw:*

6.3.1.1 A gas-powered chainsaw having an idle speed of 2250 ± 250 rpm, a maximum power of 3.3 ± 0.3 kW at 8500 rpm that meets the following specifications: (*1*) 66.7 cm^3 or 4.0 $in.^3$; (*2*) bore 50 mm; (*3*) stroke 34 mm; (*4*) clutch engagement speed of 3450 ± 250 rpm; (*5*) maximum no-load speed of 12 500 rpm; (*6*) maximum no-load chain speed of 27 m⁄s (5475 f⁄m); and (*7*) 3⁄8 by seven-tooth rim drive sprocket. (Figs. 3 and 4.)

6.3.1.2 Throttle control mechanism is used to maintain constant saw chain speed.

6.3.1.3 The engine of the chainsaw is a two-stroke engine that uses a gasoline/oil mixture. The gasoline shall be a premium unleaded without alcohol additive and having a minimum anti-knock rating of 90. The oil shall be a high-quality two-stroke oil specially developed for chainsaws. Mix ratio is 50 + 1 (2 % two-stroke oil to 98 % gasoline).

6.3.1.4 Chainsaw power head shall be checked using a dynamometer after any of the following: (*1*) when CS50 of a calibration sample lot exceeds a range of speed greater than 13.9 m/s ± 1.0 m/s (2750 fpm ± 200 fpm); (*2*) after 120 test cuts; or (*3*) when chainsaw has been idle for more than 30 days.

6.3.1.5 The chainsaw shall be fitted with a resistive type plug to reduce interference with the chain speed electronics.

NOTE 4—When testing constraints prevent dynamometer verification, technician is responsible to check that the engine is running smoothly, starts readily, has a clean screen, if present, a good spark plug, and so forth.

[5] Husqvarna Model 570 XP with a seven-tooth drive sprocket, available from Husqvarna, http://www.husqvarna.com.

[6] This is the sole source of supply known to the committee at this time. If you are aware of alternative suppliers, please provide this information to ASTM Headquarters. Your comments will receive careful consideration at a meeting of the responsible technical committee,[1] which you may attend.

AVA Documents
Document Sharing Hub

Full document details: ASTM F1414-19(2023)

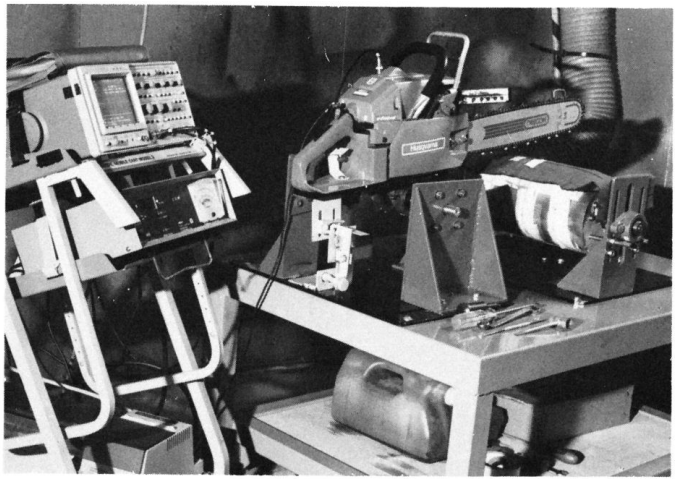

FIG. 4 Post Contact with Specimen (Rear View)

NOTE 5—All requirements of the chainsaw are determined in accordance with many manufacturers' published specifications.

6.3.2 *Chain:*[6,7]

6.3.2.1 A chain with a pitch of 10 mm (⅜ in.), a 0.058 in. gage, and a round ground full chisel cutter.

6.3.2.2 New chain may be used without sharpening or the chain must be sharpened using the sharpening procedure noted in Annex A1 before testing.

6.3.3 *Guide Bar:*

6.3.3.1 A guide bar having a length of 500 mm (20 in.) with an eleven-tooth roller-nose sprocket designed to accommodate a 10 mm (⅜ in.) pitch, 0.058 in. gage saw chain.

6.3.3.2 The roller nose on the guide bar will need to be cleaned at periodic intervals. To facilitate repeated cleanings, the rivets attaching the roller nose to the bar should be replaced. Modification requires that rivets be removed and holes be enlarged by drilling, so that aircraft-quality bolts and locking nuts can be used.

6.3.4 *Chain Guidance and Lubrication:*

6.3.4.1 The saw chain shall be able to turn freely around the drive sprocket and roller nose. The system shall be adequately lubricated. Chain tension shall be adjustable so that application of a force of 15 N on the middle of the guide bar causes a chain deflection of 6 ± 0.5 mm.

6.4 *Chainsaw Support Bracket:*

6.4.1 The saw is attached to a metal plate that rotates freely around the axle (see Fig. 5 and Fig. 7).

6.4.2 The horizontal distance between the pivot of the saw and the central axis of the specimen support is 365 ± 1 mm (14.2 ± 0.125 in.) (see Figs. 5 and 6).

6.4.2.1 The vertical distance between the pivot of the saw and the center of the drive sprocket cannot exceed 130 mm (5 in.).

6.4.3 The mounting mechanism of the chainsaw to the bracket shall be fixed.

6.4.4 The guide bar falls perpendicular to the support axis and exerts a static force of 15 N at the point of contact.

6.4.5 The vertical dropping distance to the point of contact with foam is 50 mm (2 in.). The longitudinal axis of the guide bar is virtually horizontal at the moment of contact (see Figs. 3 and 4).

6.4.6 A trigger release mechanism allows freefall without initial acceleration (see Figs. 4 and 6).

6.5 *Interfaced Data Acquisition System:*

6.5.1 The cutting time between wires placed on the top and bottom of the specimen is measured to ±0.001 s.

6.5.1.1 These wires are connected to the circuitry.

6.5.2 The speed of the saw chain may be measured in metres per second or feet per minute (±3 %) by means of a magnetic pickup which reads data from a pickup band that is pressed onto the clutch housing. This data is then read by a tachometer which is calibrated to read this information. Some other effective means may be used to determine chain speed with equivalent precision (see Fig. 3).

7. Hazards

7.1 **Warning—**The chainsaw equipment used in this test method can pose a potential danger to the technician if specific safety cautions are not followed.

7.2 As a minimum safety precaution, it is suggested that the spark plug wire be disengaged until engine needs to be started.

7.3 As a further safety precaution, it is suggested that the spark plug wire be grounded by circuitry after cutting the lower wire of the data collection system. If the chain stops before this wire is cut, or if the chain slides over the specimen, a timer should limit the test and stop the engine by grounding the electric circuitry of the chainsaw.

7.4 The technician performing this test method should use ear protection to avoid potential hearing injury.

7.5 The technician performing this test method should use eye protection to avoid potential eye injury.

7.6 The chainsaw motor should be vented to prevent potential danger posed by carbon monoxide gas.

8. Sampling

8.1 *Lot Sample*—As a lot sample for acceptance testing, take at random the number of shipping containers directed in an applicable material specification or other agreement between the purchaser and the supplier. Consider shipping containers to be the primary sampling units.

NOTE 6—An adequate specification or other agreement between the purchaser and the supplier requires taking into account the variability between shipping containers, between laboratory samples within a shipping container, and between test specimens within a laboratory sample to provide a sampling plan with a meaningful producer's risk, consumer's risk, acceptable quality level, and limiting quality level.

8.2 *Specimen Preparation:*

8.2.1 The specimen shall be of the same fabric assembly as that used in protective garment. Its technical description (number of layers, fabric used, etc.) shall be supplied.

[7] The sole source of supply of the saw chain with a pitch of 10 mm (0.40 in.), ⅜, 72LP (73LP) Oregon Type, known to the committee at this time is Blount, Inc., 4909 S.E. International Way, PO Box 22127, Portland, OR 97222. If you are aware of alternative suppliers, please provide this information to ASTM International Headquarters.

AVA Documents
Document Sharing Hub

Full document details: ASTM F1414-19(2023)

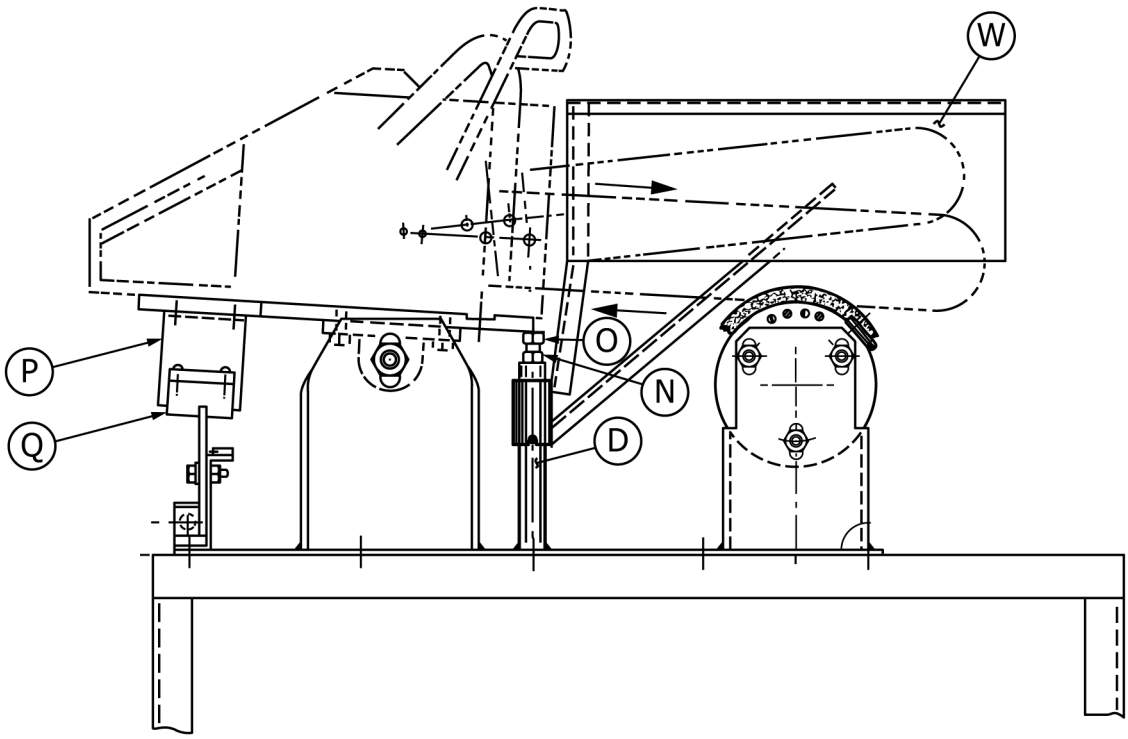

Item	Quantity	Description
A	1	steel plate 0.25 by 576 by 670 mm
B	2	steel plate 0.25 by 216 by 375 mm
C	2	steel plate 0.25 by 208 by 216 mm
D	1	steel tube 0.75 by ID – 1 mm OD by 172 mm
E	1	aluminum plate 0.5 by 4 by 14.5 mm
F	1	hardwood or white pine 152 by 400 mm
G	2	hinge 3 by 3 by 1⁄16 in.
H	1	foam pad 15 by 180 by 360 mm + glue
I	6	threaded rod 0.40 by 16 by 120 mm
J	12	bolt 0.40 by 16 mm
K	8	wood screw 8 by 0.75 mm TR
L	1	steel axle 0.75 mm diameter × 350 threaded 0.75 mm × 10 mm × 80 mm at each end
M	2	pillow block VPS112 valuline browing
N	5	bolt 0.75 by 10 mm
O	1	hex bolt 0.75 by 10 by 70 mm
P	1	square 30 mm × 90 mm × 3⁄16 × 75L
Q	1	stopping block 20 mm × 40 mm × 60L
R	1	lever support 3⁄16 × 80 mm × 130 mm
S	1	lever 0.25 by 60 by 120 mm
T	1	axle 0.250
U	1	compression spring
V	1	micro-switch
W	1	safety shield pivoting on D

NOTE 1—Measurements are in millimeters. Arcs of a circle are measured on the circumference of the wood cylinder.

FIG. 5 Chainsaw Support Bracket (Side View)

8.2.2 Four holes, 6 mm (0.25 in.) in diameter, shall be punched into the specimen at the laboratory at the places specified. Use these holes to position and to fasten the specimen to the test apparatus. Construct a template for consistency among specimens (Fig. 8).

8.3 *Number of Specimens:*

8.3.1 Use each specimen only once. Each leg of a paired item can be considered a specimen.

8.3.2 Use at least three unconditioned specimens to determine CS50 of calibration pads.

8.3.3 Use at least twelve unconditioned specimens and twelve conditioned specimens if this test method is used to determine the CS50 of performance pads.

AVA Documents
Document Sharing Hub

Full document details: ASTM F1414-19(2023)