This international standard was developed in accordance with internationally recognized principles on standardization established in the Decision on Principles for the Development of International Standards, Guides and Recommendations issued by the World Trade Organization Technical Barriers to Trade (TBT) Committee.

Designation: F1577 – 05 (Reapproved 2019)

Standard Test Methods for Detention Locks for Swinging Doors[1]

This standard is issued under the fixed designation F1577; the number immediately following the designation indicates the year of original adoption or, in the case of revision, the year of last revision. A number in parentheses indicates the year of last reapproval. A superscript epsilon (ε) indicates an editorial change since the last revision or reapproval.

1. Scope

1.1 These test methods cover the apparatus, procedures, and acceptance conditions for evaluating the normal operational performance and the performance characteristics under assault conditions of locks used in swinging door assemblies in detention and correctional institutions. Thus, they give only an indication of the performance characteristics of locks in actual service. Such variables as installation and maintenance conditions are not considered.

1.2 It is the intent of these test methods to help ensure that detention locks perform at or above minimum acceptable levels to control passage to unauthorized or secure areas, to confine inmates, and to delay and frustrate escape attempts and resist vandalism. It is recognized that in order to meet the intent of these test methods, door and frame assemblies must be compatible with the level of performance required by Test Methods F1450.

1.3 The values stated in inch-pound units are to be regarded as the standard. The values in parentheses are for information only.

1.4 *This standard does not purport to address all of the safety concerns, if any, associated with its use. It is the responsibility of the user of this standard to establish appropriate safety, health, and environmental practices and determine the applicability of regulatory limitations prior to use.*

1.5 *This international standard was developed in accordance with internationally recognized principles on standardization established in the Decision on Principles for the Development of International Standards, Guides and Recommendations issued by the World Trade Organization Technical Barriers to Trade (TBT) Committee.*

2. Referenced Documents

2.1 *ASTM Standards:*[2]

E152 Test Method for Fire Tests Of Door Assemblies (Withdrawn 1995)[3]

F1450 Test Methods for Hollow Metal Swinging Door Assemblies for Detention and Correctional Facilities

F1592 Test Methods for Detention Hollow Metal Vision Systems

F1643 Test Methods for Detention Sliding Door Locking Device Assembly

F1758 Test Methods for Detention Hinges Used on Detention-Grade Swinging Doors

F1915 Test Methods for Glazing for Detention Facilities

2.2 *ANSI Standard:*[4]

ANSI A156.5 Auxiliary Locks and Associated Products

2.3 *UL Standards:*[5]

UL-437 Standard for Key Locks

UL-1034 Standard for Burglary Resistant Electric Locking Mechanisms

3. Terminology

3.1 *Definitions:*

3.1.1 *Bolts:*

3.1.1.1 *bolt projections, n*—distance the lock bolt extends from the lock case measured with the lock bolt in an extended position.

3.1.1.2 *dead bolt, n*—lock component having an end that protrudes from or is withdrawn into the lock front by action of the lock mechanism by rotating the key or thumb turn. When

[1] These test methods are under the jurisdiction of ASTM Committee F33 on Detention and Correctional Facilities and are the direct responsibility of Subcommittee F33.04 on Detention Hardware.

Current edition approved April 1, 2019. Published April 2019. Originally approved in 1995. Last previous edition approved in 2012 as F1577 – 05 (2012). DOI: 10.1520/F1577-05R19.

[2] For referenced ASTM standards, visit the ASTM website, www.astm.org, or contact ASTM Customer Service at service@astm.org. For *Annual Book of ASTM Standards* volume information, refer to the standard's Document Summary page on the ASTM website.

[3] The last approved version of this historical standard is referenced on www.astm.org.

[4] Available from American National Standards Institute (ANSI), 25 W. 43rd St., 4th Floor, New York, NY 10036.

[5] Available from Underwriters Laboratories (UL), Corporate Progress, 333 Pfingsten Rd., Northbrook, IL 60062.

Copyright © ASTM International, 100 Barr Harbor Drive, PO Box C700, West Conshohocken, PA 19428-2959. United States

Documents
Document Sharing Hub
Full document details: ASTM F1577-05(2019)

the door is closed and the dead bolt is thrown, it extends into a hole provided in the strike, locking the door, and will not return with end pressure.

3.1.1.3 *deadlocking latch bolt, adj*—component that, when actuated, automatically locks the projected latch bolt against return by end pressure. Also referred to as an auxiliary latch bolt or roller bolt.

3.1.1.4 *latch bolt, n*—lock component having a beveled end that projects from the lock front in its extended position but may be forced back into the lock case by end pressure or drawing back by action of the lock mechanism. When the door is closed, the latch bolt projects into a hole provided in the strike, holding the door in a closed position. Sometimes referred to as a *snapbolt*.

3.1.2 *bolt throw, n*—distance the lock bolt travels from a retracted to a fully extended position.

3.1.3 *cylinder, n*—subassembly of a lock containing a plug with a key slot and tumbler mechanism.

3.1.3.1 *builders hardware cylinder, adj*—key cylinder of similar design to the mogul cylinder except smaller (1⁵⁄₃₂ in. (40 mm) in diameter), with keys and internal parts at least half the size of mogul cylinders. Also known as *commercial cylinders and mortise cylinders*. See ANSI A156.5, 6.9.

3.1.3.2 *mogul cylinder, adj*—pin tumbler cylinder approximately 2 in. (51 mm) in diameter, 2 in. long.

3.1.3.3 *mogul key, adj*—oversized key designed to fit the mogul cylinder, which is approximately 1½ in. (38 mm) by 3⅝ in. (92 mm).

3.1.3.4 *paracentric cylinder, commonly referred to as a lever tumbler cylinder, adj*—key cylinder consisting of a cylinder that is an integral part of the lock.

3.1.3.5 *paracentric key, commonly referred to as a lever tumbler key, adj*—paracentric keys are between 4 in. (102 mm) and 5 in. (153 mm) long, with large ends or bows, which may be as large as 2½ in. (63 mm) wide.

3.1.4 *detention security, adj*—assurance of the restriction of mobility of inmates to designated areas within a correctional or detention facility.

3.1.5 *hand tools, n*—items permitted for use in disengaging a lock when it fails to disengage, either remotely or manually; such items are tools commonly carried in a correctional facility maintenance tool kit: hand screwdrivers (various sizes and tip configurations including tips for coverplate security screws), claw hammer, ball peen hammer, chisel, pliers (any common size), and vise grips.

3.1.6 *hinged door, adj*—door equipped with hinges that permit it to swing about the hinge axis.

3.1.7 *hollow metal, n*—term used in reference to such items as doors, frames, partitions, enclosures, and other items that are fabricated from sheet metal. These products are internally reinforced but hollow, hence the term *hollow metal*.

3.1.8 *locks, n*—fastening device that secures a door or window assembly against unauthorized use. A lock generally includes the cylinder, bolt, strike, knobs, or levers.

3.1.9 *manufacturer, n*—party responsible for the fabrication of the lock.

3.1.10 *performance characteristics, n*—response attributes of the lock in any one of the tests described.

3.1.11 *strike or strike plate, n*—metal plate attached to or mortised into the door or frame to receive and hold a projected latch bolt or dead bolt, or both, in order to secure the door to the jamb.

3.1.12 *strike box, n*—housing used in the back of the strike to enclose the bolt or bolt opening.

3.1.13 *testing laboratory, n*—independent testing laboratory not associated with the manufacturer.

3.1.14 *trim, n*—trim shall include knobs or lever handles used to retract the latch bolt or to act as a pull when the latch bolt is inoperative.

4. Significance and Use

4.1 A major concern for detention and correctional administrative officials is the reliable operation of locks used in their facilities. These test methods aid in assigning a level of physical security and performance to locks for swinging door assemblies.

4.2 These test methods evaluate the resistance of a lock to attacks using battering devices, prying devices, and fire. These test methods also evaluate the performance of a lock under simulated operating conditions. These test methods do not provide a measure of the resistance or performance of a lock subjected to attack by chemical agents, ballistics, explosives, or other extreme methods of attack. These test methods do not measure the resistance or performance of the device when subjected to environmental elements such as rain, snow, or wind-carried dust or sand. Where such elements may be a factor, the manufacturer should be consulted for proper application.

4.3 The primary purpose of these test methods is to approximate the levels of abuse and operating conditions to which locks are subjected in detention and correctional institutions. The desired result of these test methods will provide a measure of assurance of protection to the correctional personnel, public, and inmates.

4.4 It is recommended that the detention/correctional facility administration provide adequate training, supervision, and preventative maintenance programs to enable door assemblies to function as intended throughout the expected service life.

5. Sample Selection, Construction, and Size

5.1 Sample locks shall be randomly selected and shall be representative of the types and styles intended for use in the application of these test methods.

5.2 The manufacturer shall permanently mark the test sample and retain them at the manufacturing facility for future reference. Instead of test samples, the manufacturer shall provide a certified procedure for the construction of tested assemblies.

5.3 The test assembly shall be certified by an independent, third-party testing and certification agency, any change of

AVA Documents
Document Sharing Hub

Full document details: ASTM F1577-05(2019)

components or assembly methods or processes shall be certified in writing by the testing certification agency. The agency shall have the sole authority to decide the extent and scope of retesting required.

5.4 Test reports shall include complete details and photographs of the test specimen, the testing apparatus, and installation instructions including templates for all items of hardware.

6. Test Methods

6.1 A test sample shall consist of a minimum of one lock. The test methods that follow may consist of independent setups and procedures.

6.2 *Impact Test*—Locks shall comply with the following.

6.2.1 *Scope*—This test method is designed to evaluate the capability of a detention lock to resist repeated impact forces.

6.2.2 *Significance and Use*—This test method is intended to closely simulate a sustained battering ram-style attack and provide an evaluation of the capability of the lock to prevent, delay, or frustrate escape or access to unauthorized areas, or combination thereof. The test results are intended to aid in assigning a level of physical security to various configurations of detention locks. An impact test of this design performed on a detention lock evaluates the impact strength of the lock and its components as well as the quality of fabrication techniques.

6.2.3 *Apparatus:*

6.2.3.1 *Impactor*—The impactor shall consist of a hinged or pivoted system with a mass capable of delivering impacts of 200 ft·lb (271.2 J) to a hinged panel simulating a door mounted in a frame assembly. The striking surface of the impactor shall be made from C1010–C1020 carbon steel and have a striking surface area of 4.0 ± 0.04 in.^{2} (25.8 cm^2) (see Fig. 1). (Refer to Appendix X1.)

6.2.4 *Procedure*—Install the lock in a test fixture simulating a door and frame assembly. The anchoring method for the lock and the strike, where the strike is normally required with the lock, shall accurately simulate the manufacturer's mounting procedures. Using the test apparatus in accordance with 6.2.3, deliver the number of impacts of 200 ft·lb (271.2 J) as required for the grade level being tested. See Table 1 for the number of required impacts. The point of impact shall be on the door panel along a centerline through the lock bolt space at 6 in. (152 mm) from the strike.

6.2.5 *Test Termination and Conditions of Acceptance*—The lock shall remain engaged and the door panel shall remain in place throughout the testing. Failure of the lock to remain engaged or the door panel to remain closed shall constitute failure. Upon completion of the impact series, an attempt shall be made to manually disengage the lock. If the lock will not disengage by remote or key operation or by use of commonly available hand tools, it shall constitute failure.

6.2.6 *Precision and Bias*—No information is presented about either the precision or bias of the impact test within these test methods since the test result is nonquantitative.

6.3 *Fire Test*—When specified for fire doors, locks shall comply with the following:

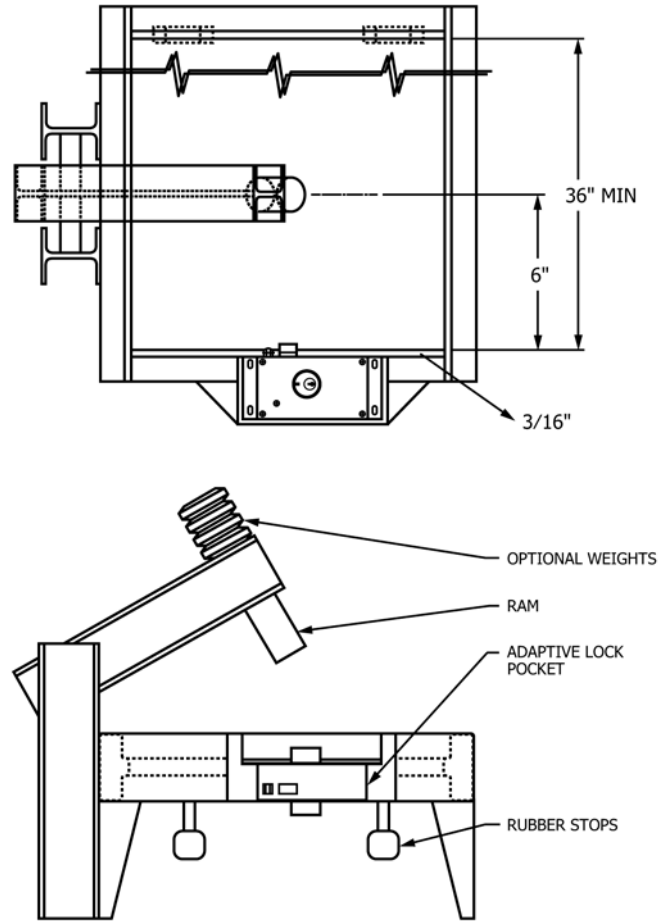

FIG. 1 Swing Lock Impactor

TABLE 1 Impact Test Criteria

Security Grade	Number of Impacts	Element of Time[A]
1	600	60 min
2	400	40 min
3	200	20 min
4	100	10 min

[A] Element of time is based on the assumption that sustained manpower can deliver 400 blows of 200 ft·lb (271.2 J) each in 40 min. Since 400 blows is the number of impacts a Grade 2 lock must absorb and still be operational, in accordance with 6.2.5, it is assumed failure of the Grade 2 lock will occur after 40 min. The element of time assigned to the various grades of locks is adjusted to achieve more manageable time periods than actual calculations provide. The element of time is hypothetical and is offered solely as a design suggestion.

6.3.1 The door assembly with the required lock shall be subjected to fire endurance and hose stream tests in accordance with Methods E152 or equivalent.

6.3.2 *Test Termination and Conditions of Acceptance*—The acceptance criteria of fire ratings shall be in accordance with Methods E152, or equivalent. If a manufacturer omits design options in the fire test, those options will not be permitted in production models that are required to carry fire ratings.

6.3.3 *Precision and Bias*—The precision and bias of the fire test method within these test methods are essentially as specified in the test method utilized (Methods E152 or equivalent).

6.4 *Cylinder Test*—Locks shall comply with the following.

AVA Documents
Document Sharing Hub

Full document details: ASTM F1577-05(2019)

6.4.1 *Scope*—The lock mechanical key cylinder shall be tested to evaluate the capabilities of the cylinder and key to continuously function independent of the lock mechanism under normal operating conditions. Cycle tests in accordance with Table 2 shall be performed. Also test the cylinder for resistance to tool attack, pick resistance, and forcing tests in accordance with test standards UL-437 and UL-1034. Standard UL-437 is not applicable to a paracentric cylinder lock.

6.4.2 *Significance and Use*—This test method is intended to closely simulate continuous or long-term usage of the lock cylinder and key by repeatedly operating the key and cylinder. A cycle test of this design, as performed on a cylinder and key, evaluates the wear characteristics and fatigue strength of the cylinder and key independent of the lock as well as the quality of fabrication techniques. These test methods are intended to establish the acceptable level of use and resistance of the cylinder to be violated by a concentrated force or by manipulation with hand tools. Cylinders are expected to remain locked after being subjected to operating cycles, relatively short-term attack by static force and hand tools in accordance with standards UL-437 and UL-1034.

6.4.3 *Apparatus*—This test method, utilizing the key and cylinder, moves and rotates the cylinder mechanisms through its locked and unlocked positions. The degree of rotation shall be 180° either clockwise or counterclockwise. A typical configuration is shown in Fig. 2.

6.4.4 *Procedure*—The cylinder will be taken through a complete cycle of locking and unlocking, utilizing the apparatus in accordance with 6.8.3. A cycle is the insertion and rotation to simulate lock bolt retraction and removal of the key from the cylinder. Determine the total number of cycles in accordance with Table 2.

6.4.5 *Test Termination and Conditions of Acceptance*—The acceptance criteria shall be in accordance with standards UL-437 and UL-1034. Testing individual components of the lock is acceptable if each component test is conducted in accordance with standards UL-437 and UL-1034. The level of performance shall meet the rating of small tool attack and forcing tests. Cylinders completing the number of cycles shown in Table 2 without failure with only periodic lubrication, key replacement, and adjustment in accordance with the manufacturer's recommendations shall be deemed to have passed the test.

6.4.6 *Precision and Bias*—No information is presented about either the precision or bias of the cylinder test within these test methods since the test result is nonquantitative.

6.5 *Remote Lock Bolt Retraction Force Test:*

TABLE 2 Cylinder and Key Test Cycles[A]

Type	Number of Cycles	Cylinder Torque
Mogul	1 000 000	8 in.·lb (0.9 NM)
Builders hardware	100 000[B]	4 in.·lb (0.45 NM)
Paracentric	50 000	tested in lock assembly

[A] Cylinders and keys must be capable of successfully completing the test method in accordance with 6.6. At 83-lbf side-load, the key, and cylinder must exert at least 85 in.·lb of torque without breaking.
[B] Builders hardware cycle requirement exceeds ANSI A156.5.

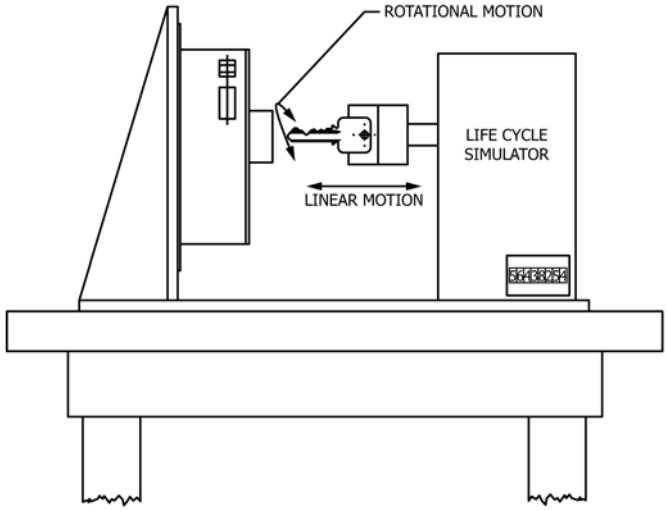

FIG. 2 Cylinder Rotation Test Apparatus

6.5.1 *Scope*—This test method evaluates the capabilities of remotely controlled locks to function, under simulated operating conditions, while lateral force is applied perpendicular to the door face to prohibit lock bolt retractions.

6.5.2 *Significance and Use*—This test method simulates the remote release (unlocking) of locks while being subjected to a perpendicular lateral force directed to stop lock bolt retraction. A test of this design performed on an electric or a pneumatic lock evaluates the operating force characteristics and strength of the lock and its components as well as the quality of fabrication techniques.

6.5.3 *Apparatus:*

6.5.3.1 The test fixture shall consist of a satisfactory frame and a hinged door. An example of such a fixture is shown in Fig. 3 and must incorporate the lock manufacturer's recommendations for mounting the lock and strike, where a strike is furnished with the lock.

6.5.3.2 The test apparatus shall consist of a loading device, a simulated control panel, and a means for monitoring voltage and current supplied to the lock. When testing pneumatic locks, air pressure shall also be monitored. The side-load on the bolt shall be 83 lbf (369 N).

6.5.3.3 Provide a means to adjust the energy to the lock within the parameters specified in 6.5.4.3.

6.5.4 *Procedure:*

6.5.4.1 Mount the test lock and the strike, where the strike is supplied with the lock, in the test fixture in accordance with the manufacturer's recommended installation instructions.

6.5.4.2 Lubricate the lock in accordance with the manufacturer's installation instructions. Do not lubricate the strike or lock bolt keeper.

6.5.4.3 Set the air pressure or voltage output, or both, of the control panel to the minimum variation allowed by the manufacturer. Electrical energy should be in compliance with standard UL-1034.

6.5.4.4 Verify that the door and the lock are free from binding before applying the load to the door.

AVA Documents
Document Sharing Hub

Full document details: ASTM F1577-05(2019)

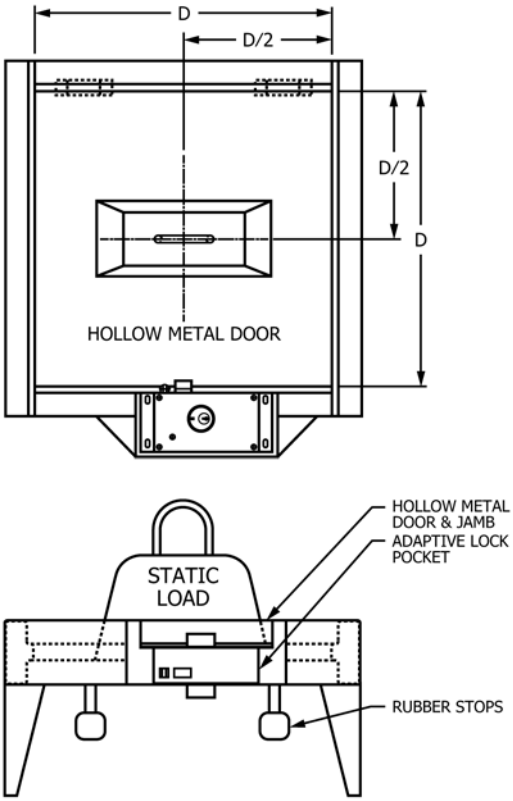

$$\text{BOLT SIDE LOAD} = 83\ \text{lbF}\ (37.7\ \text{kg}) = \frac{\text{DOOR WEIGHT} + \text{STATIC LOAD}}{2}$$

FIG. 3 Latchbolt Side Load Test Apparatus

6.5.4.5 With the latch bolt engaged in the strike, apply the static load determined in accordance with 6.7.3.2 on the push (stop) side of door. Apply the required load on the centerline of the lock bolt.

6.5.4.6 Remotely disengage the lock allowing the door to operate to the extent permitted by the test fixture, while maintaining the specified test load.

6.5.4.7 Perform 6.5.4.5 and 6.5.4.6 five consecutive times. The test shall be completed in 15 min.

6.5.5 *Test Termination and Conditions of Acceptance*—Failure of the lock bolt to retract in any of the five attempts shall constitute failure.

6.5.5.1 Failure of the lock bolt to retract in 10 s or less in any of the five attempts shall constitute failure.

6.5.5.2 If during any of the five attempts, the current draw, air pressure, or air consumption exceeds the manufacturer's specifications, this shall constitute failure.

6.5.6 *Precision and Bias*—No information is presented about either the precision or bias of the remote lock bolt retraction force test within these test methods since the test result is nonquantitative.

6.6 *Mechanical Release Force Test:*

6.6.1 *Scope*—This test method evaluates the capability of a mechanical lock to function, under simulated operating conditions, while lateral force is applied perpendicular to the door face to prohibit lock bolt retraction.

6.6.2 *Significance and Use:*

6.6.2.1 This test method simulates the manual release (unlocking by key) of a lock while being subjected to a perpendicular lateral force directed to stop the lockbolt retraction.

6.6.2.2 A test of this design performed on a key-operated lock evaluates the operating force characteristics and strength of the lock and its components as well as the quality of fabrication techniques.

6.6.3 *Apparatus:*

6.6.3.1 The test fixture shall consist of a stationary frame and a hinged door. The fixture shall be constructed in accordance with Fig. 3 and must incorporate the lock manufacturer's recommendations for mounting the lock and strike, where a strike is furnished with the lock.

6.6.3.2 The test apparatus shall consist of a loading device. The side-load on the bolt shall be 83 lbf (369 N). This requires that a builder's hardware key must be capable of exerting 85 in.·lb of torque without breaking.

6.6.4 *Procedure:*

6.6.4.1 Mount the test lock and the strike, where the strike is supplied with the lock, in the test fixture in accordance with the manufacturer's recommended installation instructions.

6.6.4.2 After the lock is installed in the test fixture in accordance with 6.5.3.1, engage the lock and check to be sure that it remains locked.

6.6.4.3 With the latch bolt engaged in the strike, apply the static load determined in 6.6.3.2 on the push (stop) side of door. Apply the required load on the centerline of the lockbolt.

6.6.4.4 While maintaining the specified test load, manually disengage the lock, allowing the door to operate to the extent permitted by the test fixture. Levers, wrenches, or other similar devices are allowed to assist in increasing the mechanical advantage of the key. The key used shall be representative of the manufacturer's production.

6.6.4.5 Perform 6.6.4.3 and 6.6.4.4 five consecutive times while maintaining the specified perpendicular load.

6.6.5 *Test Termination and Conditions of Acceptance*—Inability to retract the lock bolt while maintaining the perpendicular load or breakage, or both, of the key while attempting to unlock the door shall constitute failure.

6.6.6 *Precision and Bias*—No information is presented about either the precision or bias of the mechanical release force test within these test methods since the test result is nonquantitative.

6.7 *Remote Operation Cycle Test:*

6.7.1 *Scope*—This test method evaluates the capabilities of remote operation locks to continuously function under normal operating cycles.

6.7.2 *Significance and Use*—This test method is intended to closely simulate repeated operation of the lock as it undergoes a cycle of remote unlocking and relocking of dead bolts and slam locking of latch bolts. The cycle test evaluates the wear characteristics and fatigue strength of the lock's components as well as the quality of fabrication techniques.

6.7.3 *Apparatus:*

6.7.3.1 The test apparatus shall have a means to open and close the door a minimum of 3 in. A door shall be closed with an impact of 10 ft·lb of energy at the strike edge of the door. An example of such a test apparatus is shown in Fig. 4.

AVA Documents
Document Sharing Hub

Full document details: ASTM F1577-05(2019)

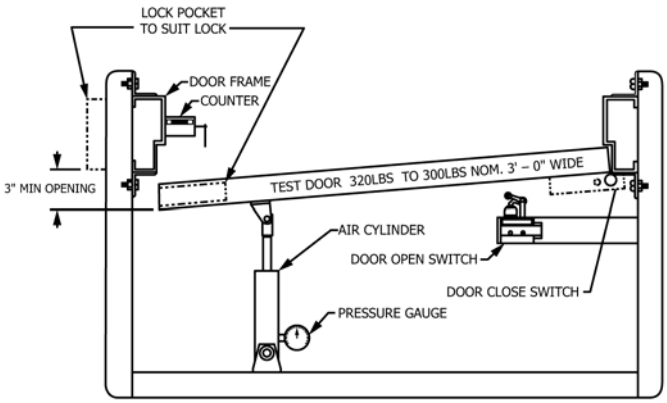

FIG. 4 Swing Lock Operational Cycle Test Apparatus

6.7.3.2 A control device with a means to adjust the voltage and the air pressure to the lock shall be provided, and a calibrated measuring device to measure voltage, current, air pressure, and air consumption shall be provided to measure energy to the lock under load. The control device shall include a means to monitor any auxiliary limit switches that are actuated during the normal operation of the lock.

6.7.3.3 A counting device actuated by the hinged test panel shall be provided.

6.7.3.4 Indication of locked and unlocked status, when available in the lock under test, shall be monitored.

6.7.4 *Procedure:*

6.7.4.1 Mount the sample in a test fixture incorporating the recommendations provided by the manufacturer's installation instructions.

6.7.4.2 Lubricate the lock before and during the test in accordance with the manufacturer's recommendations.

6.7.4.3 Set the operating voltage, current, and air pressure to the lock under load to the minimum of the voltage range specified by the manufacturer to within ±10 % of the range.

6.7.4.4 The duration of the test is 1 000 000 cycles as measured by an automatic counter.

6.7.5 *Test Termination and Conditions of Acceptance*—Locks completing 1 000 000 cycles without failure and only periodic lubrication and adjustment in accordance with the manufacturer's recommendations shall be deemed to have passed the test. This shall include all auxiliary limit switches included as part of the test lock.

6.7.6 *Precision and Bias*—No information is presented about either the precision or bias of the remote operation cycle test within these test methods since the test result is nonquantitative.

6.8 *Mechanical Release Operation Cycle Test:*

6.8.1 *Scope*—This test method evaluates the capability of the lock mechanical release mechanism to continuously function, simulating mechanical release operating cycles, independent from the performance capabilities of the key and cylinder. Tests shall be in accordance with applicable UL-1034 standards.

6.8.2 *Significance and Use*—This test method is intended to closely simulate continuous or long-term usage of the mechanical release locking mechanism by repeatedly operating release (unlocking) of the mechanism. A cycle test of this design performed on a lock evaluates the wear characteristics and fatigue strength of the lock's mechanical release and other lock components as well as the quality of fabrication techniques.

6.8.3 *Test Apparatus*—This test method moves the lockbolt through its locked and unlocked positions. Indication of locked and unlocked status, when available in the lock under test, shall be monitored. Cycle initiation and monitoring shall be accomplished by independent sensing of the lock position. A typical configuration is shown in Fig. 2.

6.8.4 *Procedure*—The lock will be taken through a complete cycle of locking and unlocking utilizing the apparatus in accordance with 6.8.3. The total number of cycles shall be 1 000 000. The completion of a cycle will be determined by sensing the proper movement and position of the latch bolt and the proper indication sequence when the lock normally includes such features.

6.8.5 *Test Termination and Conditions of Acceptance*—Locks completing 1 000 000 cycles without failure and only periodic lubrication and adjustment in accordance with the manufacturer's recommendations shall be deemed to have passed the test. This shall include all auxiliary limit switches included as part of the test lock.

6.8.6 *Precision and Bias*—No information is presented about either the precision or bias of the mechanical release operation cycle test within these test methods since the test result is nonquantitative.

7. Report

7.1 Report the information in accordance with 5.4. In addition, report the following information:

7.2 *For the Impact Test:*

7.2.1 If the lock specimen remained engaged throughout testing,

7.2.2 If the door panel remained in place throughout testing, and

7.2.3 Following completion of the impact series, whether the lock disengaged by remote or key operation or by use of commonly available hand tools.

7.3 *For the Fire Test:*

7.3.1 If intended to meet acceptance criteria of fire ratings, which fire rating standard was used, Methods E152 or equivalent,

7.3.2 If the lock specimen met the acceptance criteria of fire ratings in accordance with Methods E152 or equivalent, and

7.3.3 If not, explain.

7.4 *For the Cylinder Test:*

7.4.1 Type of cylinder: mogul, builder's hardware, or paracentric,

7.4.2 What was tested, a cylinder specimen or its components,

7.4.3 If cylinder completed the number of cycles specified in Table 2 without failure,

7.4.3.1 If not, how many cycles were completed before failure, and

7.4.4 If the cylinder specimen or its components met the rating of a small tool attack in accordance with UL-1034 and UL-437.

AVA Documents
Document Sharing Hub

Full document details: ASTM F1577-05(2019)

7.5 *For the Remote Lock Bolt Retraction Force Test:*

7.5.1 In any of the attempts, whether the lock bolt failed to retract during application of the static load,

7.5.2 In all of the attempts, whether the lock bolt retracted in 10 s or less,

7.5.3 In any of the attempts, whether the current draw exceeded the manufacturer's specifications,

7.5.4 In any of the attempts, whether the air pressure exceeded the manufacturer's specifications, and

7.5.5 In any of the attempts, whether the air consumption exceeded the manufacturer's specifications.

7.6 *For the Mechanical Release Force Test:*

7.6.1 In any of the attempts, whether the lock bolt failed to retract during application of the static load, and

7.6.2 In all of the attempts, whether the key broke while attempting to unlock the door as specified in 6.6.4.

7.7 *For the Remote Operation Cycle Test:*

7.7.1 If the lock, including all auxiliary limit switches that are part of the test lock, completed 1 000 000 cycles as indicated in 6.7.4 without failure and only periodic lubrication and adjustment in accordance with the manufacturer's specifications, and

7.7.2 If not, how many cycles were completed before failure.

7.8 *For the Mechanical Release Operation Cycle Test:*

7.8.1 If the lock, including all auxiliary limit switches that were part of the test lock, completed 1 000 000 cycles as specified in 6.8.4 without failure and only periodic lubrication and adjustment in accordance with the manufacturer's specifications, and

7.8.2 If not, how many cycles were completed before failure.

8. Keywords

8.1 correctional facility; detention facility; detention security; fire test; hardware; impact test; locks; swinging door assemblies

APPENDIXES

(Nonmandatory Information)

X1. TEST APPARATUS

X1.1 Test equipment suitable for use in evaluating the physical security and performance of detention locks is described in this appendix. While certain commercial instruments are identified to adequately describe the test equipment, in no case does such identification imply recommendation or endorsement, nor does it imply that the material or equipment described is necessarily the best for the purpose.

X1.2 Figs. 1-4 show the test fixtures necessary to carry out the test methods described in 6.2, 6.4, 6.5, and 6.7. Test fixtures of alternate designs may be used provided the same test parameters are evaluated.

X2. LOCK FUNCTION GUIDE

X2.1 *Lock Function Guide:*

X2.1.1 Lock functions are fairly common between grades as established by 6.2 and styles of locks; therefore, this function list is based on a number for a special function. In order to be specific, prefixes for the type of key cylinder is offered, that is, P.M.C. The user's specification should establish key cylinder requirements by adding the appropriate key cylinder prefix or by description in the specification. To simplify use of the function number, specifications could contain directions eliminating the use of key type, power requirements, knob/level requirements, etc. See the example in X2.10.

X2.1.2 The specifier must include all options desired by either using complete nomenclature that includes all desired options or by including descriptions which include desired options. See the example in X2.10.

X2.2 *Function Series:*

100 Series	Mechanical Detention Locks	Grades 1 and 2
200 Series	Remote-Controlled Detention Locks Jamb Mounted)	Grades 1, 2, 3
300 Series	Miscellaneous Locks For Non-Swinging Doors (Detention Locks not covered by this test method.)	
400 Series	Mechanical Mortise Locks	Grade 4
500 Series	Remote-Controlled Mortise Locks-Power Unlock (Fail Locked: Automatically locks when power is lost).	Grade 4
600 Series	Remote-Controlled Mortise Locks-Power Lock (Fail Unlocked: Automatically unlock when power is lost).	Grade 4

X2.3 *Key Cylinder Prefixes (Applies to Mechanical and Remote-Operated Locks):*

X2.3.1 P = paracentric key cylinder (that is, P201).

X2.3.2 M = Mogul key cylinder (that is, M201).

X2.3.3 C = Commercial key cylinder (Refer to ANSI/BHMA A156.5 for cylinder standards and 6.4.5, Table 2).

AVA Documents
Document Sharing Hub

Full document details: ASTM F1577-05(2019)

Prefixes Available	Function Number	Suffixes Available	DESCRIPTION OF OPERATION		Options Available	ASTM Grades See #5
P, M, C	103	–1, –2	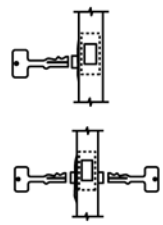	Swinging door deadlock for small doors, hatches, access panels. Minimum bolt size 1-1/2" × 3/4" × 5/8" throw. Deadlocks by key.	B, C, D	
P, M, C	104	–1	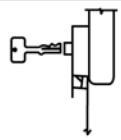	Food pass latch. Operated by key outside only. Does not deadlock.	B, C, D	
P	105	–1, –2	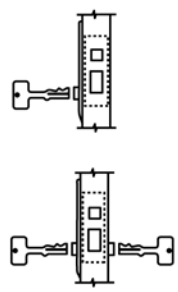	Swinging door deadlatch. Operated by key one or both sides. Automatically deadlocks when closed.	B, C, D	1
P	106	–1, –2	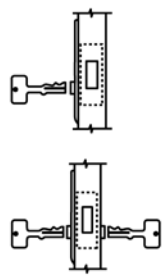	Swinging door latch & deadlock. Latch operated by key one or both sides. Deadlocks by tuning key 360° in opposite direction.	B, C, D	1
P	107	–1, –2	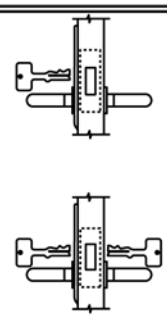	Swinging door latch & deadlock. Latch operated by key one or both sides or trim both sides when unlocked. Deadlocks by turning key 360° in opposite direction. Trim rigid both sides when deadlocked.	B, C, D	1

FIG. X2.1 Nomenclature

X2.3.4 Verify the availability of key cylinder options with the manufacturer.

X2.4 *Key Cylinder Suffixes (Applies to Mechanical and Remote-Operated Locks):*

X2.4.1 -1 to lock series numbered for keyed one side (for example, P101-1).

X2.4.2 -2 to lock series number for key two sides (for example, P101-2).

Documents
Document Sharing Hub

Full document details: ASTM F1577-05(2019)