NOTICE: This standard has either been superseded and replaced by a new version or withdrawn.
Contact ASTM International (www.astm.org) for the latest information

Designation: F 1711 – 96 (Reapproved 2002)

Standard Practice for Measuring Sheet Resistance of Thin Film Conductors for Flat Panel Display Manufacturing Using a Four-Point Probe Method[1]

This standard is issued under the fixed designation F 1711; the number immediately following the designation indicates the year of original adoption or, in the case of revision, the year of last revision. A number in parentheses indicates the year of last reapproval. A superscript epsilon (ϵ) indicates an editorial change since the last revision or reapproval.

1. Scope

1.1 This practice describes methods for measuring the sheet electrical resistance of sputtered thin conductive films deposited on large insulating substrates, used in making flat panel information displays. It is assumed that the thickness of the conductive thin film is much thinner than the spacing of the contact probes used to measure the sheet resistance.

1.2 This standard is intended to be used with Test Method F 390.

1.3 Sheet resistivity in the range 0.5 to 5000 ohms per square may be measured by this practice. The sheet resistance is assumed uniform in the area being probed.

1.4 This practice is applicable to flat surfaces only.

1.5 Probe pin spacings of 1.5 mm to 5.0 mm, inclusive (0.059 to 0.197 in inclusive) are covered by this practice.

1.6 The method in this practice is potentially destructive to the thin film in the immediate area in which the measurement is made. Areas tested should thus be characteristic of the functional part of the substrate, but should be remote from critical active regions. The method is suitable for characterizing dummy test substrates processed at the same time as substrates of interest.

1.7 The values stated in SI units are to be regarded as the standard. The values given in parentheses are for information only.

1.8 *This standard does not purport to address all of the safety concerns, if any, associated with its use. It is the responsibility of the user of this standard to establish appropriate safety and health practices and determine the applicability of regulatory limitations prior to use.*

2. Referenced Documents

2.1 *ASTM Standards:*

F 390 Test Method for Sheet Resistance of Thin Metallic Films With a Collinear Four-Probe Array[2]

3. Terminology

3.1 *Definitions:*

3.1.1 For definitions of terms used in this practice see Test Method F 390.

4. Summary of Practice

4.1 This practice describes the preferred means of applying Test Method F 390 to measure the electrical sheet resistance of thin films on very large flat substrates. An array of four pointed probes is placed in contact with the film of interest. A measured electrical current is passed between two of the probes, and the electrical potential difference between the remaining two probes is determined. The sheet resistance is calculated from the measured current and potential values using correction factors associated with the probe geometry and the probe's distance from the test specimen's boundaries.

4.2 The method of F390 is extended to cover staggered in-line and square probe arrays. In all the designs, however, the probe spacings are nominally equal.

4.3 This practice includes a special electrical test for verifying the proper functioning of the potential measuring instrument (voltmeter), directions for making and using sheet resistance reference films, an estimation of measurement error caused by probe wobble in the probe supporting fixture, and a protocol for reporting film uniformity.

4.4 Two appendices indicate the computation methods employed in deriving numerical relationships and correction factors employed in this practice, and in Test Method F 390.

5. Significance and Use

5.1 Applying Test Method F 390 to large flat panel substrates presents a number of serious difficulties not anticipated in the development of that standard. The following problems are encountered.

[1] This practice is under the jurisdiction of ASTM Committee F01 on Electronics and is the direct responsibility of Subcommittee F01.17 on Sputter Metallization.

Current edition approved Dec. 10, 2002. Published May 2003. Originally approved in 1996. Last previous edition approved in 1996 as F 1711 – 96.

[2] *Annual Book of ASTM Standards*, Vol 10.04.

Copyright © ASTM International, 100 Barr Harbor Drive, PO Box C700, West Conshohocken, PA 19428-2959, United States.

Documents
Document Sharing Hub
Full document details: ASTM F1711-96(2002)

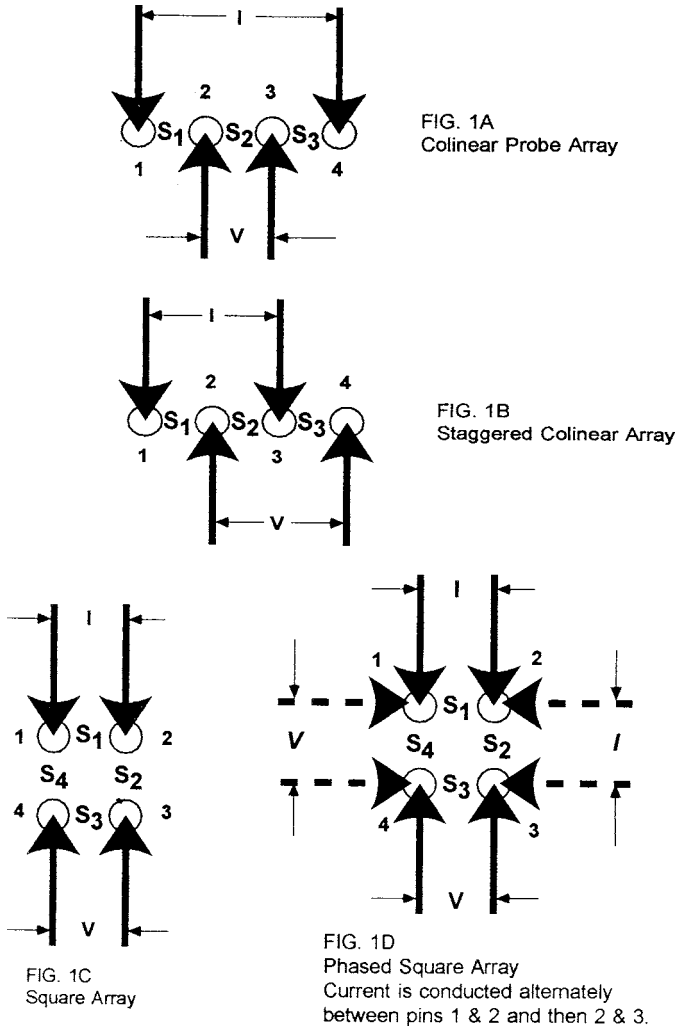

FIG. 1 Four-Point Probe Configurations

5.1.1 The four-point probe method may be destructive to the thin film being measured. Sampling should therefore be taken close to an edge or corner of the plate, where the film is expendable. Special geometrical correction factors are then required to derive the true sheet resistance.

5.1.2 Test Method F 390 is limited to a conventional collinear probe arrangement, but a staggered collinear and square arrays are useful in particular circumstances. Correction factors are needed to account for nonconventional probe arrangements.

5.1.3 Test Method F 390 anticipates a precision testing arrangement in which the probe mount and sample are rigidly positioned. There is no corresponding apparatus available for testing large glass or plastic substrates. Indeed, it is common in flat panel display making that the probe is hand held by the operator.

5.1.4 It is difficult, given the conditions cited in 5.1.3, to ensure that uniform probe spacing is not degraded by rough handling of the equipment. The phased square array, described, averages out probe placement errors.

5.1.5 This practice is estimated to be precise to the following levels. Otherwise acceptable precision may be degraded by probe wobble, however (see 8.6.4).

5.1.5.1 As a referee method, in which the probe and measuring apparatus are checked and qualified before use by the procedures of Test Method F 390 paragraph 7 and this practice, paragraph 8: standard deviation, s, from measured sheet resistance, R_S, is $\leq 0.01\ R_S$.

5.1.5.2 As a routine method, with periodic qualifications of probe and measuring apparatus by the procedures of Test Method F 390 paragraph 7 and this practice, paragraph 8: standard deviation, s, from measured sheet resistance, R_S, is $\leq 0.02\ R_S$.

6. Apparatus

6.1 *Probe Assembly*:

6.1.1 The probe assembly must meet the apparatus requirements of F 390, 5.1.1-5.1.3.

6.1.2 Four arrangements of probe tips are covered in this practice:

6.1.2.1 *In-Line, Collinear, Probe Tips*, with current flowing between the outer two probes (see Fig. 1A). This is the conventional arrangement specified in Test Method F 390.

6.1.2.2 *Staggered Collinear Probe Tips*, with current flowing between one outer and one interior probe (see Fig. 1B). This arrangement is sometimes used as a check to verify the results of a conventional collinear measurement (see 6.1.2.1).

6.1.2.3 *Square Array*, with current conducted between two adjacent probe tips (see Fig. 1C).

6.1.2.4 *Phased Square Array*, with current applied alternately between opposite pairs of tips (see Fig. 1D). This arrangement has the advantage of averaging out errors caused by unequal probe spacing.

6.1.3 *Probe Support*— The probe support shall be designed in such a manner that the operator can accurately lower the probes perpendicularly onto the surface and provide a reproducible probe force for each measurement. Spring loading or gravity probe pin loading are acceptable.

6.2 *Electrical Measuring Apparatus*— The electrical apparatus must meet the apparatus requirements of Test Method F 390, 5.2.1 through 5.2.4.

6.3 *Specimen Support*— The substrate to be tested must be supported firmly.

6.4 *Additional Apparatus*:

6.4.1 If measurements will be made within a distance of 20 times the probe spacing from an insulating or highly conductive edge or corner ($20 \times S_i$, where $i = 1, 2, 3$, or 4, with reference to Fig. 1), an instrument capable of measuring the distance from the probe array position to the insulating or highly conductive boundary within ±0.25 mm (±0.010 in) is required. In most instances a vernier depth gage is suitable.

6.4.2 *Toolmaker's Microscope*, capable or measuring increments of 2.5 µm.

7. Test Specimen

7.1 The test article shall be either a display substrate that has been sputter coated with the thin film of interest, or, alternatively, a dummy plate coated in the same operation as the substrate of interest.

7.2 The conductive film must be thick enough that it is continuous. Generally this requires that the film be at least 15 nm (150Å) thick.

AVA Documents
Document Sharing Hub

Full document details: ASTM F1711-96(2002)

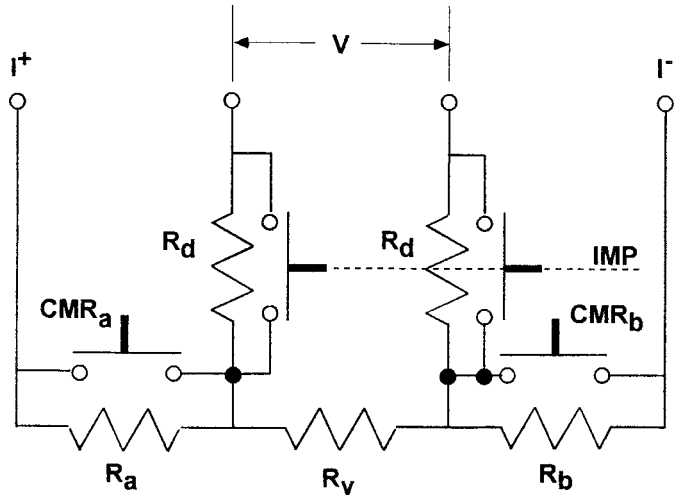

NOTE 1—Set R_v = approximately the resistance measured on the specimen film of interest as follows:

$$R_a = R_b = R_v$$
$$R_d = 100 \times R_v.$$

NOTE 2—Set I approximately the same as used for measurement of the specimen film of interest, typically 0.05 to 0.50 mA, so that V is comparable to that obtained in performing the sheet resistance determination.

NOTE 3—If R_v is set equal to a multiple of In2/2π for the in line probe of Fig. 1A, or In2/2π for a square array, then the magnitude of V is the sheet resistance value for an equivalent film measurement.

FIG. 2 Voltmeter Test Circuit

7.3 The area to be tested shall be free of contamination and mechanical damage, but shall not be cleaned or otherwise prepared.

7.4 Note that a sputtered film may also coat the edge of the glass and can coat the back side of the substrate ("over spray"). Thus the edge of the glass cannot be automatically assumed to be insulating. If sheet resistance determinations will be made within a distance of 20 times the probe spacing to an edge of the substrate it is necessary to ensure that the film terminates at the edge.

7.4.1 To eliminate over spray error in compensating for edge effects at an insulating boundary (see 10.2.2), either make a fresh cut of the substrate, grind the edge to remove any residual film, or etch the film from the edge.

7.4.2 Scribing the substrate near the edge using a glass scribe is not a reliable remedy.

7.4.3 Use a simple 2-point probe ohmeter to verify that the substrate edge is insulating.

7.5 *Soda Lime Glass Substrates*—Special precautions may be required in measuring the sheet resistance of sputtered thin films on soda lime glass substrates. The surface of this glass can be somewhat electrically conductive (on the order of $1 \times 10^6\ \Omega^2$) when the ambient relative humidity is about 90 % or higher.

7.5.1 The glass conductivity degradation may interfere with the sheet resistance measurement when specimen sheet resistivity is 1000 Ω/square or higher.

7.5.2 Ensure that films >1000 Ω/square sheet resistance deposited on soda lime glass are conditioned at less than 50 % humidity for at least 48 h prior to measurement, and that the measurement is performed at an ambient relative humidity less than 50 %.

7.5.3 Note that at relative humidity less than 50 % the surface resistance of soda lime glass in on the order of $1 \times 10^{12}\Omega$/ square.

8. Suitability of Test Equipment

8.1 *Equipment Qualification*—The probe assembly and the electrical equipment must be qualified for use as specified in Test Method F 390, paragraphs 7.1 through 7.2.3.3 on suitability.

8.2 *Voltmeter Malfunctions*—Modern solid state voltmeters using field effect transistors in the signal input circuitry are electrically fragile; failure of a field effect transistor degrades the input impedance. This failure mode is a particular hazard if input protection is not provided and if films with static charges are probed. It is recommended that the error from the voltmeter input impedance be checked periodically using the test circuit illustrated in Fig. 2.

8.2.1 *Input Impedance Error*—To measure the input impedance error, set the constant current, I, and take the voltage reading, V. Then, without changing I, make a second reading, V_d, with R_d shorted (close switch IMP, Fig. 2). The impedance error for $R_{imp} >> R_v$ is approximately as follows:

$$E_{imp} = [(V_d - V)/V_d] \times 100 \quad (1)$$

where:

E_{imp} = the percentage voltage error contributed by the finite voltmeter input impedance.

8.2.2 *Common Mode Rejection Error*—State of the art voltmeters typically have high common mode rejection (on the order of 90 dB), but this may be degraded by the failure of a field effect transistor in the input circuit (8.2). Reduction of common mode rejection will cause errors in measuring sheet resistance if unequal probe contact resistances contribute high common mode voltages. Common mode rejection error may be measured using the test circuit shown in Fig. 2.

8.2.2.1 To measure the common mode rejection error, set the constant current, I, and take the voltage reading, V. Then, without changing I, make a second reading, V_a, with R_a shorted (close switch CMR_a), and finally complete a third reading, V_b, with R_b shorted (open CMR_a, close CMR_b). The common mode error is approximately as follows:

$$E_{cm} = \{1/2[(V_a - V)^2 + (V_b - V)^2]^{1/2}\}/V \times 100 \quad (2)$$

where:

E_{cm} = the percentage voltage error contributed by common mode voltages. The voltmeter must be repaired or replaced if E_{cm} exceeds 0.5 %.

8.3 *Voltage Limited Constant Current Supply*—In cases of high sheet resistance or high contact resistance, the voltage at the constant current source may not be high enough to drive the set current. This condition causes very large errors in computed sheet resistance.

AVA Documents
Document Sharing Hub

Full document details: ASTM F1711-96(2002)