This international standard was developed in accordance with internationally recognized principles on standardization established in the Decision on Principles for the Development of International Standards, Guides and Recommendations issued by the World Trade Organization Technical Barriers to Trade (TBT) Committee.

Designation: F2245 – 23

Standard Specification for Design and Performance of a Light Sport Airplane[1]

This standard is issued under the fixed designation F2245; the number immediately following the designation indicates the year of original adoption or, in the case of revision, the year of last revision. A number in parentheses indicates the year of last reapproval. A superscript epsilon (ε) indicates an editorial change since the last revision or reapproval.

1. Scope

1.1 This specification covers airworthiness requirements for the design of powered fixed wing light sport aircraft, an "airplane."

1.2 This specification is applicable to the design of a light sport aircraft/airplane as defined by regulations and limited to VFR flight.

1.3 *Units*—The values given in this standard are in SI units and are to be regarded as standard. The values given in parentheses are mathematical conversions to inch-pound (or other) units that are provided for information only and are not considered standard. The values stated in each system may not be exact equivalents. Where it may not be clear, some equations provide the units of the result directly following the equation.

1.4 *This standard does not purport to address all of the safety concerns, if any, associated with its use. It is the responsibility of the user of this standard to establish appropriate safety, health, and environmental practices and determine the applicability of regulatory requirements prior to use.*

1.5 *This international standard was developed in accordance with internationally recognized principles on standardization established in the Decision on Principles for the Development of International Standards, Guides and Recommendations issued by the World Trade Organization Technical Barriers to Trade (TBT) Committee.*

2. Referenced Documents

2.1 *ASTM Standards:*[2]

D910 Specification for Leaded Aviation Gasolines
D4814 Specification for Automotive Spark-Ignition Engine Fuel
D7547 Specification for Hydrocarbon Unleaded Aviation Gasoline
F2316 Specification for Airframe Emergency Parachutes
F2339 Practice for Design and Manufacture of Reciprocating Spark Ignition Engines for Light Sport Aircraft
F2483 Practice for Maintenance and the Development of Maintenance Manuals for Light Sport Aircraft
F2506 Specification for Design and Testing of Light Sport Aircraft Propellers
F2538 Practice for Design and Manufacture of Reciprocating Compression Ignition Engines for Light Sport Aircraft
F2564 Specification for Design and Performance of a Light Sport Glider
F2746 Specification for Pilot's Operating Handbook (POH) for Light Sport Airplane
F2840 Practice for Design and Manufacture of Electric Propulsion Units for Light Sport Aircraft
F3619 Specification for Aeroelasticity Requirements for a Light Sport Airplane

2.2 *Federal Aviation Regulations and Advisory Circulars:*[3]

14 CFR Part 33 Airworthiness Standards: Aircraft Engines
14 CFR Part 35 Airworthiness Standards: Propellers
AC 23 Powerplant Guide for Certification of Part 23 Airplanes and Airships
AC 23.1521-2 Type Certification of Oxygenates and Oxygenated Gasoline Fuels in Part 23 Airplanes with Reciprocating Engines

2.3 *EASA Requirements:*[4]

CS-22 Sailplanes and Powered Sailplanes
CS-E Engines
CS-P Propellers

2.4 *Other Standards:*

EN 228 Automotive Fuels - Unleaded Petrol - Requirements and Test Methods[5]
GAMA Specification No. 1 Specification for Pilot's Operating Handbook[6]

[1] This specification is under the jurisdiction of ASTM Committee F37 on Light Sport Aircraft and is the direct responsibility of Subcommittee F37.20 on Airplane.

Current edition approved July 1, 2023. Published August 2023. Originally approved in 2004. Last previous edition approved in 2020 as F2245 – 20. DOI: 10.1520/F2245-23.

[2] For referenced ASTM standards, visit the ASTM website, www.astm.org, or contact ASTM Customer Service at service@astm.org. For *Annual Book of ASTM Standards* volume information, refer to the standard's Document Summary page on the ASTM website.

[3] Available from Federal Aviation Administration (FAA), 800 Independence Ave., SW, Washington, DC 20591, http://www.faa.gov or http://www.gpo.gov.

[4] Available from EASA European Aviation Safety Agency, Postfach 10 12 53, D-50452 Cologne, Germany, http://easa.europa.eu.

[5] Available from Deutsches Institut für Normung e.V.(DIN), Am DIN-Platz, Burggrafenstrasse 6, 10787 Berlin, Germany, http://www.din.de.

[6] Available from the General Aviation Manufacturers Association (GAMA), 1400 K Street NW, Suite 801, Washington, DC 20005-2485, http://www.gama.aero/.

Copyright © ASTM International, 100 Barr Harbor Drive, PO Box C700, West Conshohocken, PA 19428-2959. United States

Documents
Document Sharing Hub
Full document details: ASTM F2245-23

3. Terminology

3.1 *Definitions:*

3.1.1 *electric propulsion unit, EPU*—any electric motor and all associated devices used to provide thrust for an electric aircraft.

3.1.2 *energy storage device, ESD*—used to store energy as part of a Electric Propulsion Unit (EPU). Typical energy storage devices include but are not limited to batteries, fuel cells, or capacitors.

3.1.3 *flaps*—any movable high lift device.

3.1.4 *maximum empty weight,* W_E (N)—largest empty weight of the airplane, including all operational equipment that is installed in the airplane: weight of the airframe, powerplant, Energy Storage Device (ESD) as part of an Electric Propulsion Unit (EPU), required equipment, optional and specific equipment, fixed ballast, full engine coolant and oil, hydraulic fluid, and the unusable fuel. Hence, the maximum empty weight equals maximum takeoff weight minus minimum useful load: $W_E = W - W_U$.

3.1.5 *minimum useful load,* W_U (N)—where $W_U = W - W_E$.

3.1.6 *night*—hours between the end of evening civil twilight and the beginning of morning civil twilight.

3.1.6.1 *Discussion*—Civil twilight ends in the evening when the center of the sun's disc is 6° below the horizon, and begins in the morning when the center of the sun's disc is 6° below the horizon.

3.1.7 The terms "engine," referring to internal combustion engines, and "motor," referring to electric motors for propulsion, are used interchangeably within this specification.

3.1.8 The term "engine idle," when in reference to electric propulsion units, shall mean the minimum power or propeller rotational speed condition for the electric motor, as defined without electronic braking of the propeller rotational speed.

3.1.9 The term "vapor lock," when used in reference to liquid fuel systems, shall mean that the liquid fuel, while still in the fuel delivery system, changes state from liquid to gas (that is, vaporizes), that either causes fuel feed pressure to the propulsion unit to decrease below manufacturers' specifications, transient loss of power, or complete stalling of the propulsion unit.

3.2 *Abbreviations:*

3.2.1 *AR*—aspect ratio $= \frac{b^2}{S}$

3.2.2 *b*—wing span (m)

3.2.3 *c*—chord (m)

3.2.4 *CAS*—calibrated air speed (m/s, kts)

3.2.5 C_L—lift coefficient of the airplane

3.2.6 C_D—drag coefficient of the airplane

3.2.7 *CG*—center of gravity

3.2.8 C_m—moment coefficient (C_m is with respect to c/4 point, positive nose up)

3.2.9 C_{MO}—zero lift moment coefficient

3.2.10 C_n—normal coefficient

3.2.11 *g*—acceleration as a result of gravity = 9.81 m/s^2

3.2.12 *IAS*—indicated air speed (m/s, kts)

3.2.13 *ICAO*—International Civil Aviation Organization

3.2.14 *LSA*—Light Sport Aircraft

3.2.15 *MAC*—mean aerodynamic chord (m)

3.2.16 *n*—load factor

3.2.17 n_1—airplane positive maneuvering limit load factor

3.2.18 n_2—airplane negative maneuvering limit load factor

3.2.19 n_3—load factor on wheels

3.2.20 *P*—power, (kW)

3.2.21 ρ—air density (kg/m^3) = 1.225 at sea level standard conditions

3.2.22 *POH*—Pilot Operating Handbook

3.2.23 *q*—dynamic pressure $(\mathrm{N/m^2}) = \frac{1}{2}\rho V^2$

3.2.24 *RC*—climb rate (m/s)

3.2.25 *S*—wing area (m^2)

3.2.26 *V*—airspeed (m/s)

3.2.26.1 V_A—design maneuvering speed

3.2.26.2 V_C—design cruising speed

3.2.26.3 V_D—design diving speed

3.2.26.4 V_{DF}—demonstrated flight diving speed

3.2.26.5 V_F—design flap speed

3.2.26.6 V_{FE}—maximum flap extended speed

3.2.26.7 V_H—maximum speed in level flight with maximum continuous power (corrected for sea level standard conditions)

3.2.26.8 V_{NE}—never exceed speed

3.2.26.9 V_O—operating maneuvering speed

3.2.26.10 V_S—stalling speed or minimum steady flight speed at which the airplane is controllable (flaps retracted)

3.2.26.11 V_{S1}—stalling speed or minimum steady flight speed at which the aircraft is controllable in a specific configuration

3.2.26.12 V_{S0}—stalling speed or minimum steady flight speed at which the aircraft is controllable in the landing configuration

3.2.26.13 V_R—ground gust speed

3.2.26.14 V_X—speed for best angle of climb

3.2.26.15 V_Y—speed for best rate of climb

3.2.27 *w*—average design surface load (N/m^2)

3.2.28 *W*—maximum takeoff or maximum design weight (N)

3.2.29 W_E—maximum empty airplane weight (N)

3.2.30 W_U—minimum useful load (N)

3.2.31 W_{ZWF}—maximum zero wing fuel weight (N)

4. Flight

4.1 *Proof of Compliance:*

4.1.1 Each of the following requirements shall be met at the most critical weight and CG configuration unless otherwise

AVA Documents
Document Sharing Hub

Full document details: ASTM F2245-23

specified, the speed range from stall to V_{DF} or the maximum allowable speed for the configuration being investigated shall be considered.

4.1.1.1 V_{DF} may be less than or equal to V_D.

4.1.1.2 V_{NE} must be less than or equal to $0.9V_{DF}$ and greater than or equal to $1.1V_C$. In addition, V_{NE} must be greater than or equal to V_H.

4.1.2 The following tolerances are acceptable during flight testing:

Weight	+5 %, –10 %
Weight, when critical	+5 %, –1 %
CG	±7 % of total travel

4.2 *Load Distribution Limits:*

4.2.1 The minimum useful load, W_U, shall be equal to or greater than the sum of:

4.2.1.1 An occupant weight of 845 N (190 lbf) for each occupant seat in aircraft, plus

4.2.1.2 The weight of consumable substances, such as fuel, as required for a 1 h flight at V_h. Consumption rates must be based on test results for the specific application.

4.2.2 The minimum flying weight shall be determined.

4.2.3 Empty CG, most forward, and most rearward CG shall be determined.

4.2.4 Fixed or removable ballast, or both, may be used if properly installed and placarded.

4.2.5 Multiple ESDs may be used if properly installed and placarded.

4.3 *Propeller Speed and Pitch Limits*—Propeller configuration shall not allow the engine to exceed safe operating limits established by the engine manufacturer under normal conditions.

4.3.1 Maximum RPM shall not be exceeded with full throttle during takeoff, climb, or flight at $0.9V_H$, and 110 % maximum continuous RPM shall not be exceeded during a glide at V_{NE} with throttle closed.

4.4 *Performance, General*—All performance requirements apply in standard ICAO atmosphere in still air conditions and at sea level. Speeds shall be given in indicated (IAS) and calibrated (CAS) airspeeds.

4.4.1 *Stalling Speeds*—Wing level stalling speeds V_{SO} and V_S shall be determined by flight test at a rate of speed decrease of 0.5 m/s^2(m/s per second) (1 kt/s) or less, throttle closed, with maximum takeoff weight, and most unfavorable CG.

4.4.2 *Takeoff*—With the airplane at maximum takeoff weight, full throttle, the following shall be measured using normal takeoff procedures:

NOTE 1—The procedure used for normal takeoff, including flap position, shall be specified within the POH.

4.4.2.1 Ground roll distance to takeoff on a runway with minimal grade.

4.4.2.2 Distance to clear a 15 m (50 ft) obstacle at a climb speed of at least $1.3V_{S1}$.

4.4.3 *Climb*—At maximum takeoff weight, flaps in the position specified for climb within the POH, and full throttle:

4.4.3.1 Rate of climb at V_Y shall exceed 1.6 m/s (315 ft/min).

4.4.3.2 Climb gradient at V_X shall exceed 1/12 .

TABLE 1 Pilot Force

Pilot force as applied to the controls	Pitch, N (lbf)	Roll, N (lbf)	Yaw, N (lbf)
For temporary application (less than 2 min):			
Stick	200 (45)	100 (22.5)	...
Wheel (applied to rim)	200 (45)	100 (22.5)	...
Rudder pedal	...	...	400 (90)
For prolonged application:	23 (5.2)	23 (5.2)	110 (24.7)

4.4.4 *Landing*—For landing with throttle closed and flaps extended, the following shall be determined:

4.4.4.1 Landing distance from 15 m (50 ft) above ground when speed at 15 m (50 ft) is $1.3V_{SO}$.

4.4.4.2 Ground roll distance with reasonable braking if so equipped.

4.4.5 *Balked Landing*—The airplane shall demonstrate a full-throttle climb gradient at 1.3 V_{SO} which shall exceed 1/30 within 5 s of power application from aborted landing. If the flaps may be promptly and safely retracted without loss of altitude and without sudden changes in attitude, they may be retracted.

4.4.5.1 *Airplanes with EPU*—Balked landing performance shall be demonstrated considering minimum remaining available ESD power.

4.5 *Controllability and Maneuverability:*

4.5.1 *General:*

4.5.1.1 The airplane shall be safely controllable and maneuverable during takeoff, climb, level flight (cruise), dive to V_{DF} or the maximum allowable speed for the configuration being investigated, approach, and landing (power off and on, flaps retracted and extended) through the normal use of primary controls.

4.5.1.2 Smooth transition between all flight conditions shall be possible without exceeding pilot force as shown in Table 1.

4.5.1.3 Full control shall be maintained when retracting and extending flaps within their normal operating speed range (V_{SO} to V_{FE}).

4.5.1.4 Lateral, directional, and longitudinal control shall be possible down to V_{SO}.

4.5.2 *Longitudinal Control:*

4.5.2.1 With the airplane trimmed as closely as possible for steady flight at $1.3V_{S1}$, it must be possible at any speed between $1.1V_{S1}$ and $1.3V_{S1}$ to pitch the nose downward so that a speed not less than $1.3V_{S1}$ can be reached promptly. This must be shown with the airplane in all possible configurations, with simultaneous application of full power and nose down pitch control, and with power at idle.

4.5.2.2 Longitudinal control forces shall increase with increasing load factor.

4.5.2.3 The control force to achieve the positive limit maneuvering load factor (n_1) shall not be less than 70 N in the clean configuration at the aft center of gravity limit. The control force increase is to be measured in flight from an initial n=1 trimmed flight condition at a minimum airspeed of two times the calibrated maximum flaps up stall speed.

4.5.2.4 If flight tests are unable to demonstrate a maneuvering load factor of n_1, then the minimum control force shall be proportional to the maximum demonstrated load factor, n_{1D}, as follows:

AVA Documents
Document Sharing Hub

Full document details: ASTM F2245-23

$$f_{min} \geq 70N\left(\frac{n_{1D} - 1}{n_1 - 1}\right)$$

4.5.3 *Directional and Lateral Control:*

4.5.3.1 It must be possible to reverse a steady 30° banked coordinated turn through an angle of 60°, from both directions: (*1*) within 5 s from initiation of roll reversal, with the airplane trimmed as closely as possible to 1.3 V_{S1}, flaps in the takeoff position, and maximum takeoff power; and (*2*) within 4 s from initiation of roll reversal, with the airplane trimmed as closely as possible to 1.3 V_{SO}, flaps fully extended, and engine at idle.

4.5.3.2 With and without flaps deployed, rapid entry into, or recovery from, a maximum cross-controlled slip shall not result in uncontrollable flight characteristics.

4.5.3.3 Lateral and directional control forces shall not reverse with increased deflection.

4.5.4 *Static Longitudinal Stability:*

4.5.4.1 The airplane shall demonstrate the ability to trim for steady flight at speeds appropriate to the climb, cruise, and landing approach configurations; at minimum and maximum weight; and forward and aft CG limits.

4.5.4.2 The airplane shall exhibit positive longitudinal stability characteristics at any speed above 1.1 V_{S1}, up to the maximum allowable speed for the configuration being investigated, and at the most critical power setting and CG combination.

4.5.4.3 Stability shall be shown by a tendency for the airplane to return toward trimmed steady flight after: (*1*) a "push" from trimmed flight that results in a speed increase, followed by a non-abrupt release of the pitch control; and (*2*) a "pull" from trimmed flight that results in a speed decrease, followed by a non-abrupt release of the pitch control.

4.5.4.4 The airplane shall demonstrate compliance with this section while in trimmed steady flight for each flap and power setting appropriate to the following configurations: (*1*) climb (flaps set as appropriate and maximum continuous power); (*2*) cruise (flaps retracted and 75 % maximum continuous power); and (*3*) approach to landing (flaps fully extended and engine at idle).

4.5.4.5 While returning toward trimmed steady flight, the airplane shall: (*1*) not decelerate below stalling speed V_{S1}; (*2*) not exceed V_{NE} or the maximum allowable speed for the configuration being investigated; and (*3*) exhibit decreasing amplitude for any long-period oscillations.

4.5.5 *Static Directional and Lateral Stability:*

4.5.5.1 The airplane must maintain a trimmed condition around the roll and yaw axis with respective controls fixed.

4.5.5.2 The airplane shall exhibit positive directional and lateral stability characteristics at any speed above 1.2 V_{S1}, up to the maximum allowable speed for the configuration being investigated, and at the most critical power setting and CG combination.

4.5.5.3 Directional stability shall be shown by a tendency for the airplane to recover from a skid condition after release of the yaw control.

4.5.5.4 Lateral stability shall be shown by a tendency for the airplane to return toward a level-wing attitude after release of the roll control from a slip condition.

4.5.5.5 The airplane shall demonstrate compliance with this section while in trimmed steady flight for each flap and power setting appropriate to the following configurations: (*1*) climb (flaps as appropriate and maximum continuous power); (*2*) cruise (flaps retracted and 75 % maximum continuous power); and (*3*) approach to landing (flaps fully extended and engine at idle).

4.5.6 *Dynamic Stability*—Any oscillations shall exhibit decreasing amplitude within the appropriate speed range (1.1 V_{S1} to maximum allowable speed specified in the POH, both as appropriate to the configuration).

4.5.7 *Wings Level Stall*—It shall be possible to prevent more than 20° of roll or yaw by normal use of the controls during the stall and the recovery at all weight and CG combinations.

4.5.8 *Turning Flight and Accelerated Turning Stalls:*

4.5.8.1 With the airplane initially trimmed for 1.5 V_S, turning flight and accelerated turning stalls shall be performed in both directions as follows: While maintaining a 30° coordinated turn, apply sufficient pitch control to maintain the required rate of speed reduction until the stall is achieved. After the stall, level flight shall be regained without exceeding 60° of additional roll in either direction. No excessive loss of altitude nor tendency to spin shall be associated with the recovery. The rate of speed reduction must be nearly constant and shall not exceed 0.5 m/s^2 (m/s per second) (1 kt/s) for turning flight stalls and shall be 1.5 to 2.5 m/s^2 (m/s per second) (3 to 5 kt/s) for accelerated turning stalls. The rate of speed reduction in both cases is controlled by the pitch control.

4.5.8.2 Both turning flight and accelerated turning stalls shall be performed: (*1*) with flaps retracted, at 75 % maximum continuous power and at idle; and (*2*) with flaps extended, at 75 % maximum continuous power and at idle (speed not to exceed V_{FE}).

(1) Flaps extended conditions include fully extended and each intermediate normal operating position.

(2) If 75 % of maximum continuous power results in pitch attitudes greater than 30° for non-aerobatic aircraft, the power setting may be reduced as necessary as follows, but in no case be less than 50 % of maximum continuous power.

(a) For flaps retracted, the power setting may be reduced as necessary to not exceed 30° pitch attitude.

(b) For any flap extended condition, the test may be carried out with the power required for level flight in the respective configuration at maximum landing weight and a speed of 1.4 Vs1.

NOTE 2—If the power setting was reduced to prevent exceeding 30° pitch attitude, then the POH or Flight Training Supplement must note that the aircraft is not approved for pitch attitudes greater than 30°.

4.5.9 *Spinning:*

4.5.9.1 For airplanes placarded "no intentional spins," the airplane must be able to recover from a one-turn spin or a 3-s spin, whichever takes longer, in not more than one additional turn, with the controls used in the manner normally used for recovery.

4.5.9.2 For airplanes in which intentional spinning is allowed, the airplane must be able to recover from a three-turn spin in not more than one and one-half additional turn.

4.5.9.3 In addition, for either 4.5.9.1 or 4.5.9.2:

AVA Documents
Document Sharing Hub

Full document details: ASTM F2245-23

(1) For both the flaps-retracted and flaps-extended conditions, the applicable airspeed limit and limit maneuvering load factor may not be exceeded.

(2) There may be no excessive control forces during the spin or recovery.

(3) It must be impossible to obtain uncontrollable spins with any use of the controls.

(4) For the flaps-extended condition, the flaps may be retracted during recovery.

4.5.9.4 For those airplanes of which the design is inherently spin resistant, such resistance must be proven by test and documented. If proven spin resistant, the airplane must be placarded "no intentional spins" but need not comply with 4.5.9.1 – 4.5.9.3.

4.6 *Vibrations*—For airplanes with V_H equal to or less than 120 (CAS), flight testing shall not reveal, by pilot observation, heavy buffeting (except as associated with a stall), excessive airframe or control vibrations, flutter (with proper attempts to induce it), or control divergence, at any speed from V_{SO} to V_{DF}. If V_H is greater than 120 (CAS), use Specification F3619, Flutter Standard.

4.7 *Ground and Water Control and Stability:*

4.7.1 It must be possible to taxi, takeoff, and land while maintaining control of the airplane, up to the maximum crosswind component specified within the POH.

4.7.2 Wheel brakes must operate so as not to cause unpredictable airplane response or control difficulties.

4.7.3 A seaplane or amphibian may not have dangerous or uncontrollable porpoising characteristics at any normal operating speed on the water.

4.8 *Spray Characteristics*—Spray may not dangerously obscure the vision of the pilots or damage the propeller or other critical parts of a seaplane or amphibian at any time during taxiing, take-off, and landing.

5. Structure

5.1 *General:*

5.1.1 *Loads:*

5.1.1.1 Strength requirements are specified in terms of limit loads (the maximum loads to be expected in service) and ultimate loads (limit loads multiplied by prescribed factors of safety). Unless otherwise provided, prescribed loads are limit loads.

5.1.1.2 Unless otherwise provided, the air, ground, and water loads must be placed in equilibrium with inertia forces, considering each item of mass in the airplane. These loads must be distributed to conservatively approximate or closely represent actual conditions.

5.1.1.3 If deflections under load would significantly change the distribution of external or internal loads, this redistribution must be taken into account.

5.1.1.4 Appendix X1 – Appendix X5 provide, within the limitations specified within the appendix, a simplified means of compliance with several of the requirements set forth in 5.2.1 to 5.7.3 that can be applied as one (but not the only) means to comply.

5.1.2 *Factor of Safety:*

5.1.2.1 Unless otherwise provided in 5.1.2.2, an ultimate load factor of safety of 1.5 must be used.

5.1.2.2 Special ultimate load factors of safety shall be applied to the following:

2.0 × 1.5 = 3.0	on castings
1.2 × 1.5 = 1.8	on fittings
2.0 × 1.5 = 3.0	on bearings at bolted or pinned joints subject to rotation
4.45 × 1.5 = 6.67	on control surface hinge-bearing loads except ball and roller bearing hinges
2.2 × 1.5 = 3.3	on push-pull control system joints
1.33 × 1.5 = 2	on cable control system joints, lap belt/shoulder harness fittings (including the seat if belt/harness is attached to it)

5.1.3 *Strength and Deformation:*

5.1.3.1 The structure must be able to support limit loads without detrimental, permanent deformation. At any load up to limit loads, the deformation shall not interfere with safe operation.

5.1.3.2 The structure must be able to support ultimate loads without failure for at least 3 s. However, when proof of strength is shown by dynamic tests simulating actual load conditions, the 3-s limit does not apply.

5.1.4 *Proof of Structure*—Each design requirement must be verified by means of conservative analysis or test (static, component, or flight), or both.

5.1.4.1 Compliance with the strength and deformation requirements of 5.1.3 must be shown for each critical load condition. Structural analysis may be used only if the structure conforms to those for which experience has shown this method to be reliable. In other cases, substantiating load tests must be made. Dynamic tests, including structural flight tests, are acceptable if the design load conditions have been simulated. Substantiating load tests should normally be taken to ultimate design load.

5.1.4.2 Certain parts of the structure must be tested as specified in 6.9.

5.2 *Flight Loads:*

5.2.1 *General:*

5.2.1.1 Flight load factors, *n*, represent the ratio of the aerodynamic force component (acting normal to the assumed longitudinal axis of the airplane) to the weight of the airplane. A positive flight load factor is one in which the aerodynamic force acts upward, with respect to the airplane.

5.2.1.2 Compliance with the flight load requirements of this section must be shown at each critical weight distribution within the operating limitations specified in the POH.

5.2.1.3 *Maximum Zero Wing Fuel Weight, W_{ZWF}*—The maximum allowable weight of the airplane without any fuel in the wing tank(s) must be established if it is less than maximum design weight, W.

5.2.2 *Symmetrical Flight Conditions:*

5.2.2.1 The appropriate balancing horizontal tail loads must be accounted for in a rational or conservative manner when determining the wing loads and linear inertia loads corresponding to any of the symmetrical flight conditions specified in 5.2.2 to 5.2.6.

5.2.2.2 The incremental horizontal tail loads due to maneuvering and gusts must be reacted by the angular inertia of the airplane in a rational or conservative manner.

AVA Documents
Document Sharing Hub

Full document details: ASTM F2245-23

5.2.2.3 In computing the loads arising in the conditions prescribed above, the angle of attack is assumed to be changed suddenly without loss of air speed until the prescribed load factor is attained. Angular accelerations may be disregarded.

5.2.2.4 The aerodynamic data required for establishing the loading conditions must be verified by tests, calculations, or by conservative estimation. In the absence of better information, the maximum negative lift coefficient for rigid lifting surfaces may be assumed to be equal to −0.80. If the pitching moment coefficient, C_{mo}, is less than ±0.025, a coefficient of at least ±0.025 must be used.

5.2.3 *Flight Loads Envelope (V-n Diagram)*—Compliance shall be shown at any combination of airspeed and load factor on the boundaries of the flight loads envelope. The flight loads envelope represents the envelope of the flight loading conditions specified by the criteria of 5.2.4 and 5.2.5 (see Fig. 1).

5.2.3.1 *General*—Compliance with the strength requirements of this subpart must be shown at any combination of airspeed and load factor on and within the boundaries of a flight loads envelope similar to the one in Fig. 1 that represents the envelope of the flight loading conditions specified by the maneuvering and gust criteria of 5.2.5 and 5.2.6 respectively.

5.2.3.2 *Maneuvering Envelope*—Except where limited by maximum (static) lift coefficients, the airplane is assumed to be subjected to symmetrical maneuvers resulting in the following limit load factors: (*1*) the positive maneuvering load factor specified in 5.2.5.1 at speeds up to V_D; and (*2*) the negative maneuvering load factor specified in 5.2.5.2 at speeds up to V_D.

5.2.3.3 *Gust Envelope*—The airplane is assumed to be subjected to symmetrical vertical gusts in level flight. The resulting limit load factors must correspond to the conditions determined as follows: (*1*) positive (up) and negative (down) gusts of 15 m/s (49.2 ft/s) at V_C; and (*2*) positive and negative gusts of 7.5 m/s (24.6 ft/s) at V_D (see Fig. 1).

5.2.4 *Design Airspeeds:*

5.2.4.1 *Design Maneuvering Speed, V_A:*

$$V_A = V_S \cdot \sqrt{n_1}$$

$$V_S = \sqrt{\frac{W}{\frac{1}{2}\rho C_{LMAX} S}}, \ (m/s)$$

where:

V_S = computed stalling speed at the design maximum weight with the flaps retracted, and

n_1 = positive limit maneuvering load factor used in design.

5.2.4.2 *Design Flap Speed, V_F*—For each landing setting, V_F must not be less than the greater of: (*1*) 1.4 V_S, where V_S is the computed stalling speed with the wing flaps retracted at the maximum weight; and (*2*) 2.0 V_{SO}, where V_{SO} is the computed stalling speed with wing flaps fully extended at the maximum weight.

5.2.4.3 *Design Cruising Speed, V_C*—(*1*) V_C may not be less than $2.45\sqrt{W/S}$; and (*2*) V_C need not be greater than 0.9 V_H at sea level.

5.2.4.4 *Design Dive Speed, V_D:*

$$V_D = 1.4 \times V_{Cmin}$$

where:

$V_{C\,min}$ = required minimum cruising speed.

5.2.5 *Limit Maneuvering Load Factors:*

5.2.5.1 The positive limit maneuvering load factor n_1 may not be less than 4.0.

5.2.5.2 The negative limit maneuvering load factor n_2 may not be greater than −2.0.

5.2.5.3 Loads with wing flaps extended: (*1*) if flaps or other similar high lift devices are used, the airplane must be designed for n_1 = 2.0 with the flaps in any position up to V_F; and (*2*) n_2 = 0.

5.2.5.4 Loads with speed control devices: (*1*) if speed control devices such as speed brakes or spoilers are used, the

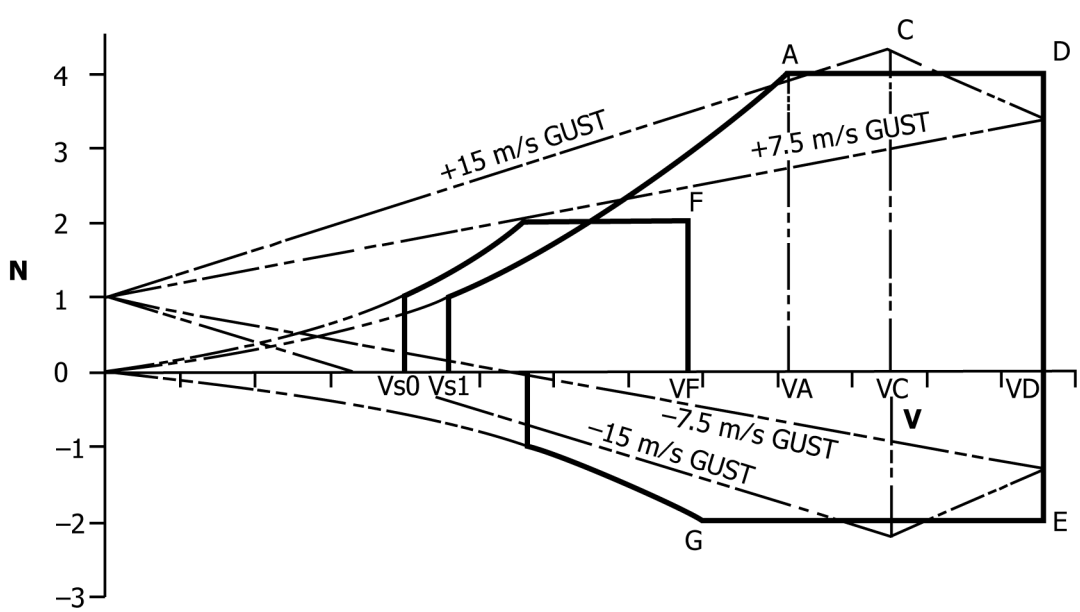

FIG. 1 Flight Loads Envelope (V-n Diagram)

Documents
Document Sharing Hub
Full document details: ASTM F2245-23

airplane must be designed for a positive limit load factor of 3.0 with the devices extended in any position up to the placard device extended speed; and (*2*) maneuvering load factors lower than those specified in 5.2.5 may be used if the airplane has design features that make it impossible to exceed these in flight.

5.2.6 *Gust Load Factors*—The airplane must be designed for the loads resulting from:

5.2.6.1 The gust velocities specified in 5.2.3.3 with flaps retracted, and

5.2.6.2 Positive and negative gusts of 7.5 m/s (24.6 ft/s) nominal intensity at V_F with the flaps fully extended.

NOTE 3—In the absence of a more rational analysis, the gust load factors may be computed by the method of Appendix X4.

5.2.7 *Unsymmetrical Flight Conditions*—The airplane is assumed to be subjected to the unsymmetrical flight conditions of 5.2.7.1 and 5.2.7.2. Unbalanced aerodynamic moments about the center of gravity must be reacted in a rational or conservative manner considering the principal masses furnishing the reacting inertia forces.

5.2.7.1 *Rolling Conditions*—The airplane shall be designed for the loads resulting from the roll control deflections and speeds specified in 5.7.1 in combination with a load factor of at least two thirds of the positive maneuvering load factor prescribed in 5.2.5.1. The rolling accelerations may be obtained by the methods given in X3.4. The effect of the roll control displacement on the wing torsion may be accounted for by the method of X3.4.2 and X3.4.3.

5.2.7.2 *Yawing Conditions*—The airplane must be designed for the yawing loads resulting from the vertical surface loads specified in 5.5.

5.2.8 *Special Conditions for Rear Lift Truss:*

5.2.8.1 If a rear lift truss is used, it must be designed for conditions of reversed air flow at a design speed of:

$$V = 0.65\sqrt{\frac{W}{S}} + 4.5$$

where:

W/S = wing loading, N/m^2.

5.2.8.2 Either aerodynamic data for the particular wing section used, or a value of C_L equaling −0.8 with a chord-wise distribution that is triangular between a peak at the trailing edge and zero at the leading edge, must be used.

5.2.9 *Engine Torque*—The engine mount and its supporting structure must be designed for the effects of:

5.2.9.1 The limit torque corresponding to takeoff power and propeller speed acting simultaneously with 75 % of the limit loads from flight condition of 5.2.5.1.

5.2.9.2 The limit torque corresponding to maximum continuous power and propeller speed acting simultaneously with the limit loads from flight condition of 5.2.5.1.

5.2.9.3 For conventional reciprocating engines with positive drive to the propeller, the limit torque to be accounted for in 5.2.9.1 and 5.2.9.2 is obtained by multiplying the mean torque by one of the following factors:

For four-stroke engines:

(1) 1.33 for engines with five or more cylinders; or

(2) 2, 3, 4, or 8 for engines with four, three, two, or one cylinders, respectively.

For two-stroke engines:

(1) 2 for engines with three or more cylinders; or

(2) 3 or 6, for engines with two or one cylinders, respectively.

5.2.9.4 For conventional electric motors with positive drive to the propeller, the limit torque to be accounted for in 5.2.9.1 and 5.2.9.2 is obtained by multiplying the mean torque by 1.33.

5.2.10 *Side Load on Engine Mount:*

5.2.10.1 The engine mount and its supporting structure must be designed for a limit load factor in a lateral direction, for the side load on the engine mount, of not less than 1.5.

5.2.10.2 The side load prescribed in 5.2.10.1 may be assumed to be independent other flight conditions.

5.2.10.3 If applicable, the nose wheel loads of 5.8.1.7 must also be considered.

5.3 *Control Surface and System Loads:*

5.3.1 *Control Surface Loads*—The control surface loads specified in 5.3.3 through 5.7.3 are assumed to occur in the conditions described in 5.2.2 through 5.2.6.

5.3.2 *Control System Loads*—Each part of the primary control system situated between the stops and the control surfaces must be designed for the loads corresponding to at least 125 % of the computed hinge moments of the movable control surfaces resulting from the loads in the conditions prescribed in 5.3.1 through 5.7.3. In computing the hinge moments, reliable aerodynamic data must be used. In no case may the load in any part of the system be less than those resulting from the application of 60 % of the pilot forces described in 5.3.3. In addition, the system limit loads need not exceed the loads that can be produced by the pilot. Pilot forces used for design need not exceed the maximum pilot forces prescribed in 5.3.3.

5.3.3 *Loads Resulting from Limit Pilot Forces*—The main control systems for the direct control of the airplane about its longitudinal, lateral, or yaw axis, including the supporting points and stops, must be designed for the limit loads resulting from the limit pilot forces as follows:

5.3.3.1 *Pitch*—445 N (100 lbf) at the grips of the stick or wheel.

5.3.3.2 *Roll*—180 N (40.5 lbf) at the grip(s) of the stick or wheel.

5.3.3.3 *Yaw*—580 N (130 lbf) acting forward on one rudder pedal.

5.3.3.4 The rudder control system must be designed to a load of 580 N (130 lbf) per pedal acting simultaneously on both pedals in the forward direction.

5.3.4 *Dual-Control Systems*—Dual-control systems must be designed for the loads resulting from each pilot applying 0.75 times the load specified in 5.3.3 with the pilots acting in opposition.

5.3.5 *Secondary Control Systems*—Secondary control systems, such as those for flaps and trim control must be designed for the maximum forces that a pilot is likely to apply.

5.3.6 *Control System Stiffness and Stretch*—The amount of control surface or tab movement available to the pilot shall not

AVA Documents
Document Sharing Hub

Full document details: ASTM F2245-23

be dangerously reduced by elastic stretch or shortening of the system in any condition.

5.3.7 *Ground Gust Conditions*—The control system from the control surfaces to the stops or control locks, when installed, must be designed for limit loads due to gusts corresponding to the following hinge moments:

$$M_S = k \cdot C_S \cdot S_S \cdot q \quad (1)$$

where:

M_S = limit hinge moment,
C_S = mean chord of the control surface aft of the hinge line,
S_S = area of the control surface aft of the hinge line,
q = dynamic pressure corresponding to an airspeed of 20 m/s (38 kts), and
k = limit hinge moment coefficient due to ground gust = 0.75.

5.3.8 *Control Surface Mass Balance Weights*—If applicable shall be designed for:

5.3.8.1 The $n = 16$ limit load normal to the surface, and

5.3.8.2 The $n = 8$ limit load fore and aft and parallel to the hinge line.

5.3.9 The motion of wing flaps on opposite sides of the plane of symmetry must be synchronized by a mechanical interconnection unless the airplane has safe flight characteristics with the wing flaps retracted on one side and extended on the other.

5.3.10 All primary controls shall have stops within the system to withstand the greater of pilot force, 125 % of surface loads, or ground gust loads (see 5.3.7).

5.4 *Horizontal Stabilizing and Balancing Surfaces:*

5.4.1 *Balancing Loads:*

5.4.1.1 A horizontal stabilizing surface balancing load is the load necessary to maintain equilibrium in any specified flight condition with no pitching acceleration.

5.4.1.2 Horizontal stabilizing surfaces must be designed for the balancing loads occurring at any point on the limit maneuvering envelope and in the air-brake and wing-flap positions specified in 5.2.5.3.

5.4.2 *Maneuvering Loads*—Horizontal stabilizing surfaces must be designed for pilot-induced pitching maneuvers imposed by the following conditions:

5.4.2.1 At speed V_A, maximum upward deflection of pitch control surface,

5.4.2.2 At speed V_A, maximum downward deflection of pitch control surface,

5.4.2.3 At speed V_D, one-third maximum upward deflection of pitch control surface, and

5.4.2.4 At speed V_D, one-third maximum downward deflection of pitch control surface.

NOTE 4—In 5.4.2, the following assumptions should be made: the airplane is initially in level flight, and its altitude and airspeed do not change. The loads are balanced by inertia forces.

5.4.3 *Gust Loads*—The horizontal stabilizing surfaces must be designed for the loads resulting from:

5.4.3.1 The gust velocities specified in 5.2.3.3 with flaps retracted, and

5.4.3.2 Positive and negative gusts of 7.5 m/s (24.6 ft/s) nominal intensity at V_F with the flaps fully extended.

NOTE 5—In the absence of a more rational analysis, the horizontal surfaces gust loads may be computed by the method of Appendix X5.

5.5 *Vertical Stabilizing Surfaces:*

5.5.1 *Maneuvering Loads*—The vertical stabilizing surfaces must be designed for maneuvering loads imposed by the following conditions:

5.5.1.1 At speed V_A, full deflection of the yaw control in both directions.

5.5.1.2 At speed V_D, one-third full deflection of the yaw control in both directions.

5.5.2 *Gust Loads:*

5.5.2.1 The vertical stabilizing surfaces must be designed to withstand lateral gusts of the values prescribed in 5.2.3.3.

NOTE 6—In the absence of a more rational analysis, the vertical surfaces gust loads may be computed by the method in Appendix X5.2.

5.5.3 *Outboard Fins or Winglets:*

5.5.3.1 If outboard fins or winglets are on the horizontal surfaces or wings, the horizontal surfaces or wings must be designed for their maximum load in combination with loads induced by the fins or winglets and moments or forces exerted on the horizontal surfaces or wings by the fins or winglets.

5.5.3.2 If outboard fins or winglets extend above and below the horizontal surface, the critical vertical surface loading (the load per unit area determined in accordance with 5.5.1 and 5.5.2) must be applied to:

(1) The part of the vertical surface above the horizontal surface with 80 % of that loading applied to the part below the horizontal surface or wing, and

(2) The part of the vertical surface below the horizontal surface or wing with 80 % of that loading applied to the part above the horizontal surface or wing.

5.5.3.3 The end plate effects of outboard fins or winglets must be taken into account in applying the yawing conditions of 5.5.1 and 5.5.2 to the vertical surfaces in 5.5.3.2.

5.5.3.4 When rational methods are used for computing loads, the maneuvering loads of 5.5.1 on the vertical surfaces and the $n = 1$ horizontal surface or wing load, including induced loads on the horizontal surface or wing and moments or forces exerted on the horizontal surfaces or wing, must be applied simultaneously for the structural loading condition.

5.6 *Supplementary Conditions for Stabilizing Surfaces:*

5.6.1 *Combined Loads on Stabilizing Surfaces:*

5.6.1.1 With the airplane in a loading condition corresponding to A or D in Fig. 1 (whichever condition leads to the higher balance load) the loads on the horizontal surface must be combined with those on the vertical surface as specified in 5.5.1. It must be assumed that 75 % of the loads according to 5.4.2 for the horizontal stabilizing surface and 5.5.1 for the vertical stabilizing surface are acting simultaneously.

5.6.1.2 The stabilizing surfaces and fuselage must be designed for asymmetric loads on the stabilizing surfaces which would result from application of the highest symmetric maneuver loads of 5.4.2 so that 100 % of the horizontal stabilizer surface loading is applied to one side of the plane symmetry and 70 % on the opposite side.

5.6.2 *Additional Loads Applying to V-Tails*—An airplane with a V-tail must be designed for a gust acting perpendicular

AVA Documents
Document Sharing Hub

Full document details: ASTM F2245-23

to one of the surfaces at speed V_C. This condition is supplemental to the equivalent horizontal and vertical cases previously specified.

5.7 *Ailerons, Wing Flaps, and Special Devices:*

5.7.1 *Ailerons*—The ailerons must be designed for control loads corresponding to the following conditions:

5.7.1.1 At speed V_A, the full deflection of the roll control.

5.7.1.2 At speed V_D, one-third of the full deflection of the roll control.

5.7.2 *Flaps*—Wing flaps, their operating mechanisms, and supporting structure must be designed for the critical loads occurring in the flaps-extended operating range with the flaps in any position. The effects of propeller slipstream, corresponding to takeoff power, must be taken into account at an airspeed of not less than 1.4 V_S, where V_S is the computed stalling speed with flaps fully retracted at the design weight. For investigating the slipstream effects, the load factor may be assumed to be 1.0.

5.7.3 *Special Devices*—The loadings for special devices using aerodynamic surfaces, such as slots and spoilers, must be determined from test data or reliable aerodynamic data that allows close estimates.

5.8 *Ground Load Conditions:*

5.8.1 *Basic Landing Conditions*—The requirements for the basic landing conditions are given in 5.8.1.1 to 5.8.1.3, Table 2, and Fig. 2.

5.8.1.1 The load factor on the wheels, n_j, may be computed as follows:

$$n_j = \frac{h + \frac{d}{3}}{ef \times d}$$

where:

h = drop height, $m = 0.0132\sqrt{W/S}$ with W/S in N/m^2, but h larger than 0.23 m (9.1 in.),

d = total shock absorber travel, m = $d_{tire} + d_{shock}$,

ef = shock efficiency, and

$ef \times d$ = $0.5 \times d$ for tire and rubber or spring shocks, or

= $0.5 \times d_{tire} + 0.65 \times d_{shock}$ for hydraulic shock absorbers.

5.8.1.2 If n_j is larger than 3.33, all concentrated masses (engine, fuel tanks, occupant seats, ballast, etc.) must be substantiated for a limit landing load factor of $n_j + 0.67 = n$ which is greater than 4.

5.8.1.3 The usual ultimate factor of safety of 1.5 applies to these conditions, unless a drop test from the reserve energy height, $hr = 1.44h$, shows that a lower factor may be used. If the shock absorber is of a fast energy absorbing type, the ultimate loads are the limit load multiplied by the conservative reserve energy factor of 1.2.

5.8.1.4 *Side Load Conditions*—The requirements for the side load conditions on the main wheels in a level attitude are given in Fig. 3.

5.8.1.5 *Braked Roll Conditions*—The requirements for the braked roll conditions on the main wheels in a level attitude are given in Fig. 4.

5.8.1.6 *Supplementary Conditions for Tail Wheel*—The requirements for the tail wheel conditions in a tail down attitude are given in Fig. 5.

5.8.1.7 *Supplementary Conditions for Nose Wheel*—The requirements for supplementary conditions for nose wheels are given in Fig. 6 (the static load is at the combination of weight and CG that gives the maximum loads).

TABLE 2 Basic Landing Conditions

NOTE 1—
$K = 0.25$
$L = 2/3$ = ratio of the assumed wing lift to the airplane weight
$n = n_j + 2/3$ = load factor
n_j = load factor on wheels in accordance with 5.8.1

NOTE 2—See Fig. 2 for the airplane landing conditions.

Condition	Tail Wheel Type		Nose Wheel Type		
	Level Landing	Tail-down Landing	Level Landing with Inclined Reactions	Level Landing with Nose Wheel Just Clear of Ground	Tail-Down Landing
Vertical component at CG	nW	nW	nW	nW	nW
Fore and aft component at CG	KnW	0	KnW	KnW	0
Lateral component in either direction at CG	0	0	0	0	0
Shock absorber deflection (rubber or spring shock absorber), %	100 %	100 %	100 %	100 %	100 %
Tire deflection	Static	Static	Static	Static	Static
Main wheel loads (V_r)	(n-L)W	(n-L)Wb/d	(n–L)Wa'/d'	(n-L)W	(n-L)W
(both wheels) (D_r)	KnW	0	KnWa'/d'	KnW	0
Tail (nose) wheels (V_r)	0	(n-L)Wa/d	(n-L)Wb'/d'	0	0
Loads (D_r)	0	0	KnWb'/d'	0	0

AVA Documents
Document Sharing Hub

Full document details: ASTM F2245-23

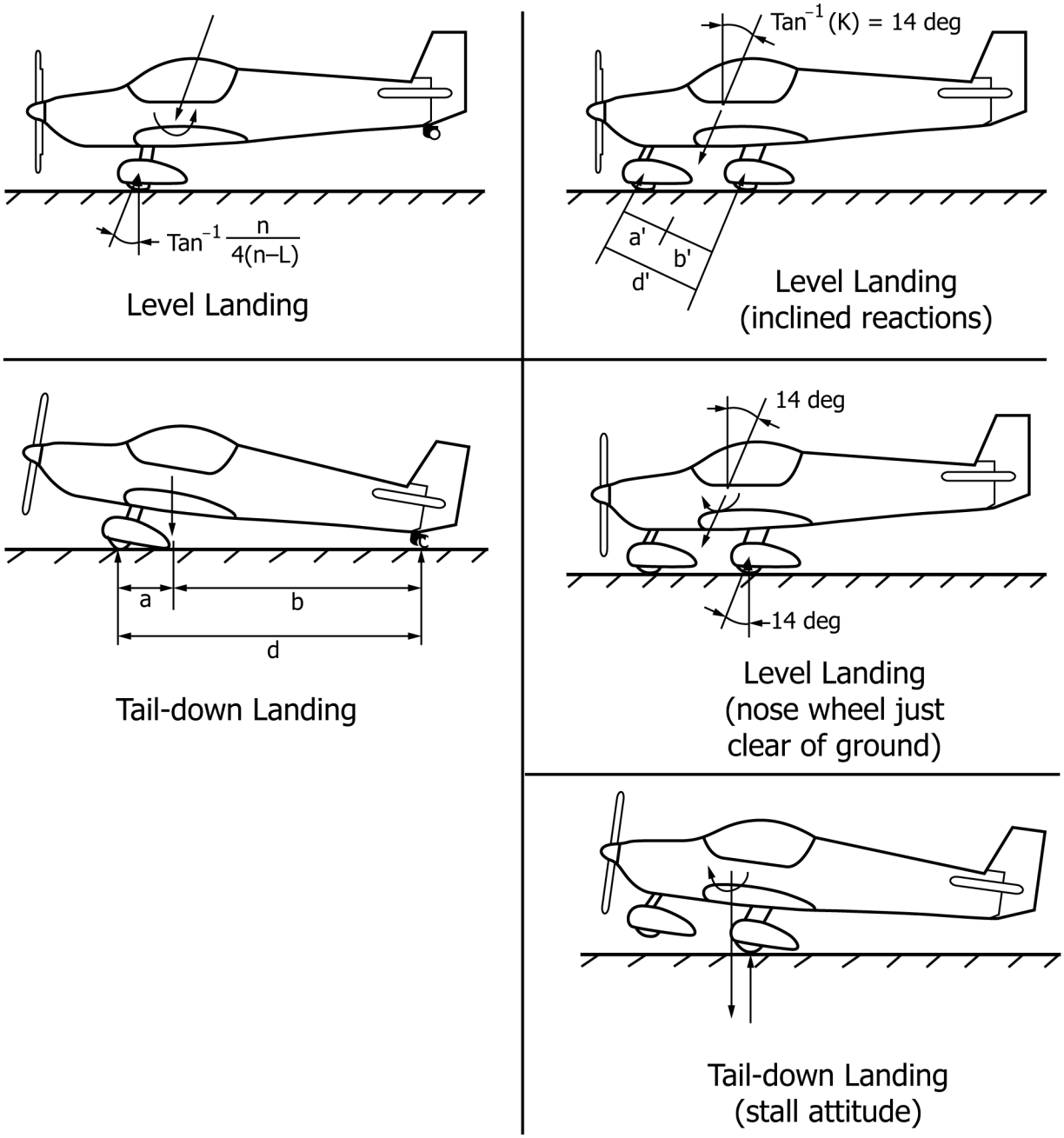

FIG. 2 Basic Landing Conditions

5.8.1.8 For the conditions in 5.8.1.4 to 5.8.1.7, the shock absorbers and tires are assumed to be in their static position.

5.9 *Water Load Conditions:*

5.9.1 The structure of seaplanes and amphibians must be designed for water loads developed during takeoff and landing with the airplane in any attitude likely to occur in normal operations at appropriate forward and sinking velocities under the most severe sea conditions likely to be encountered. Unless sufficient satisfactory service experience is available, a rational analysis of the water loads, or the methods specified in Appendix X6 may be used.

5.10 *Emergency Landing Conditions:*

5.10.1 The structure must be designed to protect each occupant during emergency landing conditions when occupants (through a lap belt and at least one shoulder harness) as well as any concentrated weight located behind or above the occupant (such as engine, baggage, fuel, ESD, ballast, and so forth), experience the static inertia loads corresponding to the following ultimate load factors (these are three independent conditions):

5.10.1.1 $n = 3$ up,

5.10.1.2 $n = 9$ ($n = 10$ for engines and ESD(s)) forward, and

5.10.1.3 $n = 1.5$ lateral.

AVA Documents
Document Sharing Hub

Full document details: ASTM F2245-23

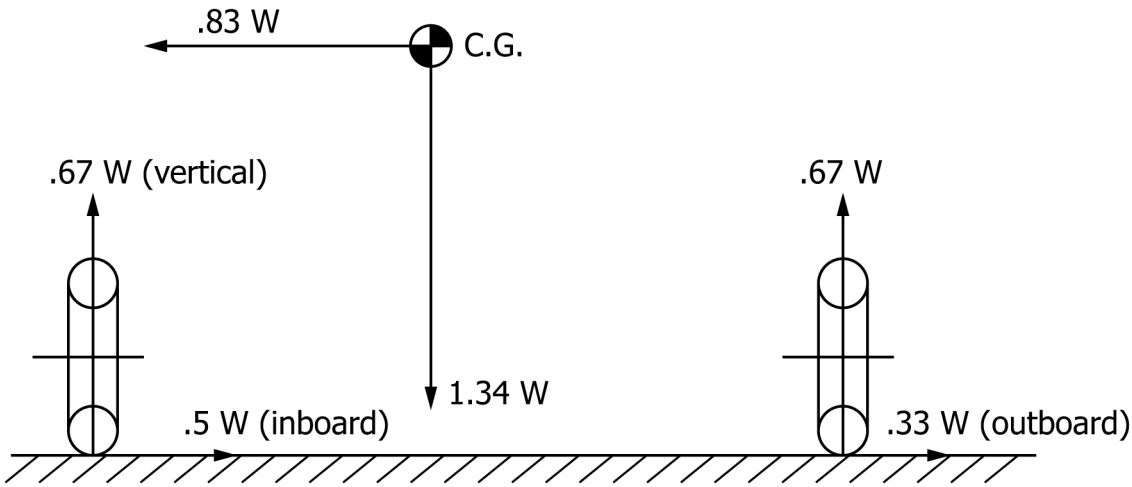

FIG. 3 Side Load Conditions

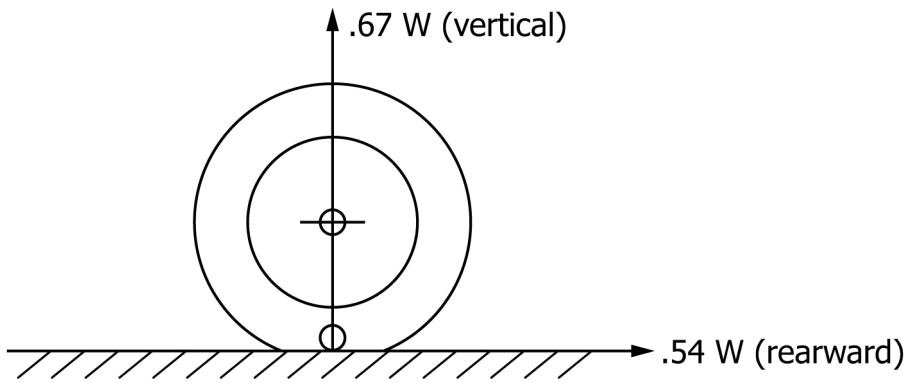

FIG. 4 Braked Roll Conditions

5.11 *Other Loads:*

5.11.1 *Tie-Down Points*—Tie-down points shall be designed for the maximum wind at which the airplane may be tied down in the open. V_R = 20 m/s (38 kts) minimum as given in 5.3.7 may be used.

5.11.2 *Parachute System Loads*—If the aircraft is to be equipped with an emergency parachute system (Ballistic Recovery System), the attachment point(s) to the airframe must be designed in accordance with Specification F2316.

5.11.3 *Loads from Single Masses*—The attachment means for all single masses which are part of the equipment for the airplane must be designed to withstand loads corresponding to the maximum design load factors to be expected from the established flight and ground loads.

6. Design and Construction

6.1 *General*—The integrity of any novel or unusual design feature having an important bearing on safety shall be established by test.

6.2 *Materials*—Materials shall be suitable and durable for the intended use. Design values (strength) must be chosen so that no structural part is under strength as a result of material variations or load concentration, or both.

6.3 *Fabrication Methods*—Manufactured parts, assemblies, and completed airplanes shall be produced in accordance with the manufacturer's quality assurance and production acceptance test procedures.

6.4 *Self-Locking Nuts*—No self-locking nut shall be used on any bolt subject to rotation in operation unless a nonfriction locking device is used in addition to the self-locking device.

6.5 *Protection of Structure*—Protection of the structure against weathering, corrosion, and wear, as well as suitable ventilation and drainage, shall be provided as required.

6.6 *Accessibility*—Accessibility for critical structural elements and control system inspection, adjustment, maintenance, and repair shall be provided.

6.7 *Rigging*—Unless specified otherwise, rigging and derigging must be able to be performed by persons having no more than average skill. It must be possible to inspect the airplane easily for correct rigging and safe-tying.

AVA Documents
Document Sharing Hub

Full document details: ASTM F2245-23