This international standard was developed in accordance with internationally recognized principles on standardization established in the Decision on Principles for the Development of International Standards, Guides and Recommendations issued by the World Trade Organization Technical Barriers to Trade (TBT) Committee.

Designation: F2332 – 06 (Reapproved 2022)

Standard Specification for Annular Ball Bearings for Instruments and Precision Rotating Components[1]

This standard is issued under the fixed designation F2332; the number immediately following the designation indicates the year of original adoption or, in the case of revision, the year of last revision. A number in parentheses indicates the year of last reapproval. A superscript epsilon (ε) indicates an editorial change since the last revision or reapproval.

1. Scope

1.1 This specification covers annular ball bearings intended primarily for use in instrument and precision rotating components. Instrument and precision ball bearings should meet tolerances specified in ABMA Standard 12.2, Instrument Ball Bearings Inch Design for Classes ABEC 5P and 7P.

1.2 *Intended Use*—Ball bearings defined by this specification are intended for use in critical components of instrument systems. Such components range from air circulating blowers and drive motors through precision gear trains, gyro gimbals, and pickoffs to rate integrating spin-motors.

1.3 The specification contains many of the requirements of MIL-B-81793, which was originally developed by the Department of Defense and maintained by the Naval Air Systems Command (Navy-AS) in Lakehurst, NJ. The following government activity codes may be found in the Department of Defense, Standardization Directory SD-1.[2]

Preparing activity	Custodians	Review activities
Navy - AS	Army - AT	Army-AV
	Navy - AS	Navy - MC, SH
	Air Force - 99	Air Force–84
	DLA - GS	

1.4 *Classification*—Annular ball bearings for instrument and precision rotating components shall be of the following types, as specified:

1.4.1 *Type I*—Annular ball bearing, for instruments and precision rotating components, deep groove, unflanged; (See Annex A1 – Annex A4)

1.4.2 *Type II*—Annular ball bearing, for instruments and precision rotating components, deep groove, flanged; (See Annex A5 – Annex A8)

1.4.3 *Type III*—Annular ball bearing, for instruments and precision rotating components, deep groove, unflanged, inner ring extended; (See Annex A9 – Annex A12)

1.4.4 *Type IV*—Annular ball bearing, for instruments and precision rotating components, deep groove, flanged, inner ring extended; (See Annex A13 – Annex A16)

1.4.5 *Type V*—Annular ball bearing, for instruments and precision rotating components, angular contact, unflanged, nonseparable, and counterbored outer ring; (See Annex A17 – Annex A20)

1.4.6 *Type VI*—Annular ball bearing, for instruments and precision rotating components, angular contact, flanged, nonseparable, and counterbored outer ring on flange side; (See Annex A21 – Annex A24)

1.4.7 *Type VII*—Annular ball bearing, for instruments and precision rotating components, angular contact, unflanged, separable, and stepped inner ring; (See Annex A25 – Annex A28)

1.4.8 *Type VIII*—Annular ball bearing, for instruments and precision rotating components, angular contact, flanged, separable, and stepped inner ring; (See Annex A29 – Annex A32)

1.4.9 *Type IX*—Annular ball bearing, for instruments and precision rotating components, angular contact, unflanged, nonseparable, and stepped inner ring. (See Annex A33 – Annex A36)

1.5 *Inch-Pound Specification*—This specification covers only the inch-pound bearings.

1.5.1 The values stated in inch-pound units are to be regarded as standard. No other units of measurement are included in this standard.

1.6 *This standard does not purport to address all of the safety concerns, if any, associated with its use. It is the responsibility of the user of this standard to establish appropriate safety, health, and environmental practices and determine the applicability of regulatory limitations prior to use.*

1.7 *This international standard was developed in accordance with internationally recognized principles on standardization established in the Decision on Principles for the Development of International Standards, Guides and Recommendations issued by the World Trade Organization Technical Barriers to Trade (TBT) Committee.*

[1] This specification is under the jurisdiction of ASTM Committee F34 on Rolling Element Bearings and is the direct responsibility of Subcommittee F34.06 on Aerospace.

Current edition approved Jan. 1, 2022. Published August 2022. Originally approved in 2006. Last previous edition approved in 2013 as F2332 - 06(2013). DOI: 10.1520/F2332-06R22.

[2] The military codes that are listed in SD-1 give the address and phone numbers of the DoD contacts. These are found in the DoD's ASSIST website http://assist.daps.dla.mil/.

Copyright © ASTM International, 100 Barr Harbor Drive, PO Box C700, West Conshohocken, PA 19428-2959. United States

Documents
Document Sharing Hub
Full document details: ASTM F2332-06(2022)

2. Referenced Documents

2.1 *ASTM Standards:*[3]

A240/A240M Specification for Chromium and Chromium-Nickel Stainless Steel Plate, Sheet, and Strip for Pressure Vessels and for General Applications

A313/A313M Specification for Stainless Steel Spring Wire

A380 Practice for Cleaning, Descaling, and Passivation of Stainless Steel Parts, Equipment, and Systems

A580/A580M Specification for Stainless Steel Wire

A666 Specification for Annealed or Cold-Worked Austenitic Stainless Steel Sheet, Strip, Plate, and Flat Bar

A756 Specification for Stainless Anti-Friction Bearing Steel

A967 Specification for Chemical Passivation Treatments for Stainless Steel Parts

D2273 Test Method for Trace Sediment in Lubricating Oils

E45 Test Methods for Determining the Inclusion Content of Steel

E140 Hardness Conversion Tables for Metals Relationship Among Brinell Hardness, Vickers Hardness, Rockwell Hardness, Superficial Hardness, Knoop Hardness, Scleroscope Hardness, and Leeb Hardness

2.2 *ABMA Standards:*[4]

STD 1 Terminology for Anti-Friction Ball and Roller Bearings and Parts

STD 10 Metal Balls

STD 12.2 Instruments Ball Bearings—Inch Design

2.3 *SAE-AMS Specifications:*[5]

SAE-AMS 2303 Aircraft Quality Steel Cleanliness, Martensitic Corrosion Resistant Steels, Magnetic Particle Inspection Procedure

SAE-AMS 5688 Steel, Corrosion Resistant Wire, 18CR-9.0NI, (SAE 30302), Spring Temper

SAE-AMS 5880 Steel, Corrosion Resistant Bars, Wire and Forgings, 17CR-0.52MO (0.95-1.2C)

SAE-AMS 6444 Steel Bars, Forgings, and Mechanical Tubing, 1.45 Cr (0.98-1.10C) (SAE 52100) Premium Aircraft Quality Consumable Electrode Vacuum Melted

SAE-AMS-QQ-S-763 Steel Bars, Wire, Shapes, and Forgings, Corrosion Resistant

2.4 *ASME Standards:*[6]

B46.1 Surface Texture (Surface Roughness, Waviness and Lay)

B89.3.1 Measurement of Out of Roundness

2.5 *ASQC Standards:*[7]

Z1.4 Sampling Procedures and Tables for Inspection by Attributes

2.6 *NCLS Standard:*[8]

Z540.1 Laboratories, Calibration, Measuring and Test Equipment

2.7 *ISO Standards:*[9]

ISO 1224 Bearings, Rolling—Instrument Precision Bearings

ISO 3290 Bearings, Rolling–Balls–Dimensions and Tolerances

ISO 10012-1 Quality Assurance Requirements for Measuring Equipment

ISO 14644-1 Cleanrooms and Associated Controlled Environments. Part 1: Classification of Air Cleaniness

ISO 14644-2 Cleanrooms and Associated Controlled Environments. Part 2: Specifications for Testing and Monitoring to Provide Continued Compliance with ISO 14644-1

2.8 *Department of Defense:*[10]

Specifications:

MIL-DTL-197 Packaging of Bearings, Associated Parts and Sub-Assemblies

MIL-PRF-6085 Lubricating Oil, Instrument, Aircraft, Low Volatility

MIL-PRF-23827 Grease, Aircraft and Instrument, Gear and Actuator Screw, NATO Code G-354, Metric

MIL-DTL-53131 Lubricating Oil, Precision Rolling Element Bearing, Polyalphaolefin Based

MIL-S-81087 Silicone Fluid, Chlorinated Phenyl Methyl Polysiloxane, NATO Code Number H-536

MIL-PRF-81322 Grease, Aircraft, General Purpose, Wide Temperature Range

MIL-B-81744 Barrier Coating Solution, Lubricant Migration Deterring

DOD-L-81846 Lubricating Oil, Instrument, Ball Bearing, High Flash Point

MIL-G-81937 Grease, Instrument, Ultra Clean, Metric

MIL-PRF-83261 Grease, Aircraft, Extreme Pressure, Anti-Wear

Standards:

MIL-STD-129 Military Marking

MIL-STD-130 Identification Marking of U.S. Military Property

MIL-STD-206 Friction Torque Testing for Bearings, Ball, Annular (Instrument Type)

MIL-STD-1334 Process for Barrier Coating of Anti-Friction Bearings

MIL-STD-1647 Identification Markings for Domestically Manufactured Bearings, Ball, Annular for Instruments and Precision Components

2.9 *Federal Standards:*

FED-STD-791 Lubricants, Liquid Fuel and Related Products, Methods of Testing[10]

[3] For referenced ASTM standards, visit the ASTM website, www.astm.org, or contact ASTM Customer Service at service@astm.org. For Annual Book of ASTM Standards volume information, refer to the standard's Document Summary page on the ASTM website.

[4] Available from American Bearing Manufacturers Association 1001 N. Fairfax Street Suite 500 Alexandria, VA 22314-1587. https://www.americanbearings.org/

[5] Available from SAE International (SAE), 400 Commonwealth Dr., Warrendale, PA 15096, http://www.sae.org.

[6] Available from American Society of Mechanical Engineers (ASME), ASME International Headquarters, Two Park Ave., New York, NY 10016-5990, http://www.asme.org.

[7] Available from American Society for Quality (ASQ), 600 North Plankinton Avenue Milwaukee, WI 53203 https://asq.org/.

[8] Available from NCSL International 5766 Central Ave, Suite 150 Boulder, CO 80301. https://ncsli.org/

[9] Available from International Organization for Standardization (ISO), ISO Central Secretariat, Chemin de Blandonnet 8, CP 401, 1214 Vernier, Geneva, Switzerland, https://www.iso.org.

[10] Available from DLA Document Services, Building 4/D, 700 Robbins Ave., Philadelphia, PA 19111-5094, http://quicksearch.dla.mil/.

AVA Documents
Document Sharing Hub

Full document details: ASTM F2332-06(2022)

3. Performance Requirements

3.1 *Annexes*—The individual item requirements shall be as specified herein and in accordance with the applicable annex. In the event of any conflict between the requirements of this specification and the annexes, the latter shall govern.

3.2 *Materials:*

3.2.1 *Ball and Ring Materials*—Balls and rings shall be made of corrosion-resistant steel, 440C (UNS S44004), conforming to SAE-AMS 5880 or A756; chromium-alloy steel 52100 (UNS G52986) conforming to SAE-AMS 6444 as specified by the applicable annexes. (A single material is represented by each annex.)

3.2.1.1 *Material Cleanliness/Inclusion Content*—440C corrosion-resistant steels used for production of bearings shall meet the cleanliness requirements of SAE-AMS 5880. Chromium-alloy steel used for the production of bearings shall meet the cleanliness requirements of SAE-AMS 6444.

3.2.1.2 *Passivation*—Passivation shall be accomplished in accordance with A380 and A967 on all bearing components fabricated from corrosion-resistant steel after completion of all machining or metal-removing operations and before assembly.

3.2.2 *Retainer Metal*—When corrosion-resistant steel is specified, crown retainers shall be UNS S41000 and ribbon retainers shall be either UNS S30200, UNS S30500, or UNS S43000 in accordance with A240/A240M or A666. Configuration shall be as specified by the part number designator in the Retainer table of the annexes.

3.2.3 *Shield Material*—Shield material shall be corrosion-resistant steel conforming to A580/A580M, Condition A, A240/A240M, or A666.

3.2.4 *Snap Ring Material*—Snap ring material shall be corrosion-resistant steel conforming to A313/A313M, Type 302, Class 1 or SAE-AMS 5688.

3.2.5 *Seal Material*—Seal materials shall be as specified by the part number designator in the Closures tables of the annexes. Materials shall be compatible with and shall be resistant to deterioration caused by lubricant, preservative, hydraulic fluid, solvents, or other substances and chemicals that can be expected to come into contact with the bearing and shall cause no deterioration of the same. Seal materials shall not affect or be affected by the lubricants and solvents referred to in this specification. Synthetic rubber seals shall operate from −65 to 230°F (−54 to 110°C).

3.3 *Design and Construction*—Bearings shall be of the design, construction, and physical dimensions specified on the applicable annex (see 3.1).

3.4 *Closures*—The number, type, and locations of closures shall be as specified by the part number designator in the Closures tables of the annexes. Unless otherwise specified, location for single closures shall be on either side of a symmetrical bearing.

3.4.1 *Closure Attachment*—Closures shall be securely attached to the outer ring and shall permit removal and reinstallation using common bearing working tools. Snap ring wires are preferred, but "self-holding" closures are permitted provided they withstand service vibration conditions without becoming detached. Reinstallation does not apply to synthetic rubber seals.

3.5 *Visual Requirements:*

3.5.1 *Surface Appearance*—Cylindrical mounting surfaces, cage piloting lands, and faces of inner and outer rings shall have a smooth finished appearance characteristic of one or more of the following processes: grinding, honing, lapping, polishing, or tumbling. The surfaces shall be free of visible tool marks, chatter and waviness, scratches with raised metal, pits, rust, or other surface imperfections. Metal retainers, snap rings, and closures shall have a smooth finished appearance characteristic of a tumbling process and shall be free of burrs, dents, and folded material. Machined nonmetallic retainers shall be free of delaminations and shall be deburred.

3.5.2 *Cracks and Fractures*—Rings, balls, retainers, snap rings, and closures shall be free of cracks and fractures.

3.5.3 *Material Imperfections*—Nonmetallic retainers shall have no material imperfections, such as chipping and pits, in ball contact areas, and material imperfections in other areas shall not exceed 0.015-in. (0.038-cm) major dimension.

3.5.4 *Particulate Contamination*—All exterior surfaces and interior areas of the bearing shall be free of foreign particles visible using 10× magnification.

3.6 *Dimensions:*

3.6.1 *Boundary Dimensions*—The boundary dimensions for each specification sheet shall be in accordance with the Boundary Dimensions table of that annex.

3.6.2 *Tolerance Class*—Tolerance classes for ABEC 5P or 7P shall be in accordance with the tolerance tables of ABMA Standard 12.2. The tolerance classes shall apply to all bearing sizes listed in the Boundary Dimensions tables of the annexes.

3.6.3 *Roundness*—Raceways shall be round within the values specified in Table 1 when measured by the minimum radial separation (MRS) method. This method consists of constructing two concentric circles, which fully encompasses the polar trace of the measured surface and have the least possible radial separation. This radial separation is the measurement of out of roundness.

3.6.4 *Radial Internal Clearance*—Radial internal clearance (radial play) of deep groove radial bearings shall be as specified by the part number designator in the Radial Internal Clearance tables of the annexes.

3.6.5 *Contact Angle*—The contact angle or radial internal clearance of angular contact bearings shall be as specified by the part number designator in the Radial Internal Clearance tables of the annexes and reflects the unit of the appropriate method of measurement. The contact angle shall be as defined by ABMA Standard 1. A bearing offered with a singular contact angle shall obtain that value within ±1.5° when measured in accordance with 4.7.5.1.

TABLE 1 Surface Roundness

Precision Level (ABEC)	Raceways (µin.)
5	50
7	40

AVA Documents
Document Sharing Hub

Full document details: ASTM F2332-06(2022)

3.7 *Performance Test*—The performance test shall be as specified by the part number designator in the Performance Test tables of the annexes.

3.7.1 *Starting Torque*—Maximum starting torque shall be in accordance with the values listed in Table 2.

3.8 *Ball Quality*—The minimum quality level of ball geometry and surface roughness for all bearings of both ABEC tolerance levels shall be a Grade 5 (G5) as selected from the grade levels specified in ABMA Standard 10/ISO 3290. The balls in each bearing shall come from the same ball lot or be inspected to be G5.

3.9 *Hardness of Balls and Rings:*

3.9.1 *440C Balls and Rings*—Through hardness of rings shall be Rockwell Rc58 min. Through hardness of balls shall be Rockwell Rc60 min. Through hardness of individual balls in any bearing shall not vary by greater than four points Rockwell Rc.

3.9.2 *52100 Balls and Rings*—Through hardness of rings shall be Rockwell Rc60 min. Through hardness of balls shall be Rockwell Rc62 min. Through hardness of individual balls in any bearing shall not vary by greater than four points Rockwell Rc.

3.10 *Surface Roughness*—Surface roughness of raceways shall not exceed 2 microinches (µin.) roughness average (R_a) for 1.000 inch outside diameter (OD) and under; 3 µin. R_a for over 1.000 inch OD. Surface roughness of mounting surfaces and cage piloted lands shall not exceed 10 µin R_a. Faces shall not exceed 16 µin R_a. Surface roughness shall be measured in accordance with 4.7.9.

3.11 *Dimensional Stability*—Rings and balls shall withstand temperature changes and exposures under test conditions of 4.7.10 with changes in diameter not exceeding the larger of the following:

Rings: 0.000100 inch/inch or 0.000025 inch
Balls: 0.000100 inch/inch or 0.000005 inch

3.12 *Lubrication:*

3.12.1 *Lubricant*—The lubricant shall conform to the specification specified by the part number designator in the Lubricant tables of the annexes.

3.12.2 *Lubricant Contamination*—The lubricant shall meet the contamination requirement of the respective specification when tested in accordance with 4.7.11.2.

3.12.3 *Lubricant Amount*—The amount of lubricant required shall be as specified by the part number in the Lubricant Amount tables of the annexes.

3.12.4 *Barrier Coating*—Barrier coating shall be applied to bearings when specified by the part number designator in the Lubricant tables of the annexes. The barrier coating shall be applied in accordance with MIL-STD-1334. The material used shall conform to MIL-B-81744.

3.12.4.1 *Barrier Coating Facilities*—The facilities used for the application of barrier coating shall conform to the requirements of MIL-STD-1334.

3.13 *Marking of Barrier Coated Bearings*— Marking of barrier coated bearings shall be in accordance with MIL-STD-1334.

3.14 *Marking of Non-Barrier Coated Bearings*—For military procurements, bearings shall be marked in accordance with MIL-STD-130 or MIL-STD-1647, as specified in the contract or order (see 6.1).

3.15 *Calibration (Classification)*—Bearings shall be supplied in classified lots according to bore and outside diameter (OD) size in steps of 0.00005 or 0.00010 inch when specified by the part number designator in the Calibration of Bore and Outside Diameter tables of the annexes. For classification

TABLE 2 Starting Torque Limits

Bearing Size (inch)		Load (gram)	Maximum Starting Torque milligram-millimeters		
			Radial Internal Clearance (inch)		
Bore Diameter *d*	Outside Diameter *D*		0.0001 to 0.0003	0.0003 to 0.0005	0.0005 to 0.0008
0.0400	0.1250	75	1800	1500	1400
0.0469	0.1562	75	1800	1500	1400
0.0550	0.1875	75	1800	1500	1400
0.0781	0.2500	75	1800	1500	1400
0.0937	0.3125	75	1800	1500	1400
0.0937	0.1875	75	1800	1500	1400
0.1250	0.2500	75	1800	1500	1400
0.1250	0.3125	75	1800	1500	1400
0.1250	0.3750	75	2000	1600	1500
0.1250	0.3750	400	5000	4500	4200
0.1250	0.5000	400	5000	4500	4200
0.1562	0.3125	75	1800	1500	1400
0.1875	0.3125	75	1800	1500	1400
0.1875	0.3750	75	2000	1600	1500
0.1875	0.5000	400	6500	5500	5000
0.2500	0.3750	75	1800	1500	1400
0.2500	0.5000	400	6000	5200	4800
0.2500	0.6250	400	7000	6000	5500
0.2500	0.7500	400	8000	7000	6500
0.3125	0.5000	400	6000	5200	4800
0.3750	0.8750	400	11 000	9500	9000

AVA Documents
Document Sharing Hub

Full document details: ASTM F2332-06(2022)

purposes, bore size shall be the smallest single bore measurement and OD shall be the largest single OD measurement.

3.16 *Workmanship*—The ball bearings, including all parts, shall be constructed and finished in a manner to ensure compliance with the requirements of this specification. Particular attention shall be paid to marking of assemblies and freedom of parts from burrs and sharp edges.

3.17 *Inspection Condition*—The inspection condition shall be a manufacturing lot consisting of finished bearings having a single part number manufactured using well established procedures and produced as one continuous batch receiving final inspection at the same location. The inspection lot shall be identified by a unique number (Manufacturer's Lot Control Number) to be included on the bearing process sheets, packaging markings and associated certifications that accompany the shipping paperwork. The manufacturer's lot control number shall be traceable to the finished bearing assembly while in its original packaging. The samples taken for acceptance testing/inspection shall be randomly selected to ensure that they are representative of the lot. Component information shall be maintained for each bearing assembly lot. Multiple component lots are permitted as long as this component information is maintained.

4. Verification

4.1 *Inspection Conditions*—Unless otherwise specified, all inspections shall be performed in accordance with the test conditions specified herein or in the applicable test method.

4.2 *Inspection Area Cleanliness*—Inspection areas shall meet the cleanliness requirements of ISO 14644-1, Class 5, Class 7.

4.3 *Measurement Standards Calibration*— Measurement standards shall have calibrations in accordance with ISO 10012-1 and NCSL Z540.1.

4.4 *Measurement Temperature*—Dimensional measurement made at other than the standard calibration temperature shall be corrected for temperature effects.

4.5 *Inspection Provisions*—Alternate inspection procedures and inspection equipment may be used by the contractor when such procedures and equipment provide, as a minimum, the quality assurance required in the contractual documents. Before applying such alternative inspection procedures and inspection equipment, the contractor shall describe them in a written proposal and shall demonstrate for the approval of the procuring representative that their effectiveness is equal or better than the contractual quality assurance procedure. In cases of dispute as to whether certain procedures of the contractor's inspection system provide equal assurance, the contract and procedures of this specification shall apply.

4.6 *Conformance Inspection Sample*— An inspection lot shall consist of all bearings of a particular identification number submitted for delivery at the same time. For each lot of assembled bearings, the procuring activity quality assurance representative shall specify the inspection level. If the inspection level is not specified, the contractor shall use their standard inspection procedures.

4.6.1 *Conformance Inspection*—The sample shall be subjected to the applicable tests specified in Table 3, Groups A and B. Groups C and D shall be used only when specified by the procuring activity.

4.7 *Methods of Inspection:*

4.7.1 *Material Inspections*—Material inspection methods shall be in accordance with the material specification.

4.7.2 *Passivation Tests*—Passivation tests of corrosion-resistant components shall be conducted in accordance with the copper sulfate or high humidity tests of A380. Each component shall be examined under 10× magnification to determine compliance.

4.7.3 *Visual Inspections*—Inspection for conformance to the requirements of 3.5.1 through 3.5.4 shall be made using a 10× binocular microscope. All other visual inspections shall be made without magnification. The classification of defects, Table 4, shall be used to classify the defects found.

4.7.4 *Dimensional Inspections:*

4.7.4.1 *Boundary Dimensions Inspection*—The bearing dimensions required in 3.6.1 and respective tolerance class required in 3.6.2 shall be measured with closures attached in accordance with ABMA Standard 12.2 and ISO 1224.

4.7.4.2 *Roundness Measurements*—Roundness measurements specifying MRS method microinch values (see 3.6.3) shall be made on equipment meeting ASME Standard B89.3.1.

TABLE 3 Conformance Inspection

Inspection	Requirement Paragraph	Test Paragraph
Group A	3.3	4.7.3
Design and construction	3.2.2	4.7.3
Retainer material	3.4	4.7.3
Closures	3.4.1	4.7.3
Closure attachment	3.5.1	4.7.3
Surface appearance	3.5.2	4.7.3
Cracks and fractures	3.5.3	4.7.3
Material imperfections	3.5.4	4.7.3
Particulate contamination	3.16	4.7.3
Workmanship	3.12.3	4.7.11.3
Barrier coating	3.14	4.7.3
Packing, Preservation, Packaging and Package Marking		
Group B	3.6.1	4.7.4.1
Boundary dimensions	3.6.2	4.7.4.2
Tolerance Class	3.6.4	4.7.5
Radial internal clearance	3.6.5	4.7.5.1
Contact angle	3.7	Applicable
Performance test	3.7.1	Annex
Starting torque	3.9	4.7.6.1
Hardness-Balls/Rings	3.15	4.7.8
Calibration (Classification)		4.7.12
Group C	3.2.1.2	4.7.2
Passivation	3.8	4.7.7
Ball quality	3.6.3	4.7.4.2
Roundness	3.10	4.7.9
Surface roughness	3.9	4.7.8
Hardness of balls and rings	3.11	4.7.10
Dimensional stability	3.12.1	4.7.11.1
Lubricant	3.12.1	4.7.11.2
Lubricant cleanliness		
Group D	3.2.1	4.7.1
Ball and ring material testing	3.2.1.1	4.7.1
Material cleanliness testing	3.2.3	4.7.1
Shield material testing	3.2.4	4.7.1
Snap ring material testing	3.2.5	4.7.1
Seal material testing		

AVA Documents
Document Sharing Hub

Full document details: ASTM F2332-06(2022)

TABLE 4 Classification of Defects

Category	Description of Defect	Requirement
Critical	Incorrect material	3.2.1 through 3.2.5
	Incorrect design and construction	3.3
	Incorrect retainer type	3.3
	Incorrect number, type or location of closures	3.4
	Closures not securely attached	3.4.1
	Cracks or fractures in any components	3.5.2
	Barrier coat on raceways, retainers, or ring lands	3.12.3
Major	Passivation	3.2.1.2
	Burrs, dents or folded material on closures	3.5.1
	Delimitation or burring of non-metallic retainers	3.5.1
	Material break out of non-metallic retainers	3.5.3
	Particulate contamination	3.5.4
	Boundary dimensions	
	Outer ring outside diameter (OD)	3.6.1
	Outer ring OD out-of-round	3.6.2
	Outer ring OD taper	3.6.2
	Outer ring radial runout	3.6.2
	Outer ring width variation	3.6.2
	Outer ring OD runout with reference face	3.6.2
	Outer ring corner radii	3.6.1
	Outer ring OD/flange face undercut	3.6.2
	Inner ring bore diameter	3.6.1
	Inner ring bore out-of-round	3.6.2
	Inner ring radial runout	3.6.2
	Inner ring width variation	3.6.2
	Inner ring bore taper	3.6.2
	Inner ring bore runout with reference face	3.6.2
	Inner ring corner radii	3.6.1
	Radial internal clearance or contact angle	3.6.4 or 3.6.5
	Starting torque	3.7.1
	Ball quality	3.8
	Hardness of balls and rings	3.9
	Surface roughness of raceways	3.10
	Incorrect lubricant	3.12.1
	Barrier coating missing from required surface	3.12.3
	Calibration	3.15
Minor	Snap rings not easily removable	3.5.1
	Surfaces do not meet visual requirements	3.5.1 through 3.5.4
	Boundary dimensions	
	Outer ring width	3.6.1
	Outer ring flange width	3.6.1
	Outer ring flange OD	3.6.1
	Outer ring OD roundness	3.6.1
	Outer ring raceway roundness	3.6.2 and 3.6.3
	Inner ring bore roundness	3.6.2 and 3.6.3
	Inner ring raceway roundness	3.6.2 and 3.6.3
	Outer ring raceway runout to reference side	3.6.2
	Inner ring raceway runout to reference side	3.6.2
	Surface roughness of mounting surface, levels and surfaces	3.10
	Marking for identification	3.14

Such equipment shall include means to provide a permanent recording on either strip or polar chart-type recorders.

4.7.5 *Radial Internal Clearance*—Radial internal clearance shall be measured with closures removed and the bearing lubricated with a thin film of oil. Gage pressure shall be the minimum required to overcome friction and weight of moving parts and obtain repeatable readings. Radial internal clearance shall be the average of three measurements taken with each measurement using a different position of the outer race. The measurements shall be made by comparison with a bearing of known radial play or by the method described in ABMA Standards 12.2 and ISO 1224.

4.7.5.1 *Contact Angle*—When the part number designator in the Radial Internal Clearance tables of the annexes for angular contact bearings specifies a contact angle, the bearing shall be mounted in such a manner that no radial distortion is caused by an interference fit. The test fixture shall be set up to impart a net thrust not to exceed 2 lb. The inner race or the outer race of the bearing shall be rotated at a constant speed while the speed of the retainer (rolling element pitch diameter) is determined. The number of revolutions of the retainer shall be counted when either the inner or the outer race is rotated. Diametric values shall be determined and recorded for use in the following applicable formulas:

Rotating Inner Race:

$$\beta = \cos^{-1}\left[\frac{E}{d}\left[1 - \frac{2Ne}{Ni}\right]\right] \quad (1)$$

Rotating Outer Race:

$$\beta = \cos^{-1}\left[\frac{E}{d}\left[\frac{2Ne}{No} - 1\right]\right] \quad (2)$$

where:

Ne = rpm of pitch circle,
Ni = rpm of rotating inner race,
No = rpm of rotating outer race,
E = pitch diameter,
β = contact angle, and
d = ball diameter.

4.7.6 *Torque Tests:*

4.7.6.1 *Starting Torque Test*—Starting torque test method shall be in accordance with MIL-STD-206.

4.7.7 *Ball Quality Inspections*—Ball diameter measurements shall be based on comparative measurements with master balls. The measurements of master balls and balls being tested shall be made at the same temperature and with the same gage pressure (see Table 5). If the master balls are of a different material than the balls being tested, readings shall be referred

TABLE 5 Standard Oil Quantities

Ball Diameter	Number of drops, #26 BD needle 1[A]							
	Number of Balls							
	5	6	7	8	9	10	11	12
0.0250	1	1	1	1	1	1	1	1
0.0312	1	1	1	1	1	1	1	1
0.0394	1	1	1	1	1	1	2	2
0.0625	1	2	2	2	2	2	3	3
0.0937	2	3	3	3	3	3	4	4
0.1250	3	3	3	3	3	3	4	4
0.1406	3	4	4	4	4	4	4	4
0.1562	3	4	4	4	4	4	4	4
0.1875	4	4	4	4	4	4	5	5
0.2187	4	4	4	4	5	5	5	5

[A] Oil: Lubricate bearing with the indicated number of drops with a 50/50 mixture by volume of oil and solvent and allow solvent to evaporate. (The properties of the oil shall not change after evaporation of the solvent.) Minimum quantity for Gimbal bearings (one drop).

AVA Documents
Document Sharing Hub

Full document details: ASTM F2332-06(2022)

to zero gage pressure and a temperature of 68 ± 3°F. Conformance to the ball quality requirements specified in ISO 3290 apply.

4.7.7.1 *Diameter Variations per Ball*—The differences between the maximum diameter measured and the minimum diameter measured on each ball is the maximum diameter variation of that ball per ISO 3290.

4.7.7.2 *Ball Diameter Variation per Bearing*—The average diameter of each ball shall be computed by averaging five measurements of that ball. The difference between the average diameter of the largest ball and the average diameter of the smallest ball in a bearing is the ball diameter variation of the bearing.

4.7.8 *Hardness Tests*—The bearings selected for this test shall not be the same bearings used for the dimensional stability test. If, because of limited size of surface or for other valid reasons, Rockwell C scale measurements are not feasible, other methods of measuring hardness may be used, provided correlation with the Rockwell C scale measurement values is established. When lighter loads are used, conversion to Rockwell C shall be through the use of charts in Hardness Conversion Tables E140. Hardness tests shall be made on flat surfaces.

4.7.9 *Surface Roughness Tests*—Measurements from less than 1 to 1000 µin. shall be made with equipment meeting the requirements of ASME B46.1. Such equipment shall allow measurements on most surfaces including fine finished or soft materials. The equipment shall include means to provide a permanent graphical plot of the data. Minimum cutoff wavelength shall be determined by dividing width of surface to be measured by ten and selecting the next lowest preferred cutoff wavelength, either 0.001, 0.003, 0.01, or 0.03 in. In deep groove raceways, the width of the surface is the distance from the bottom of the race to either land corner.

4.7.10 *Dimensional Stability Tests*—The dimensional stability of rings and balls shall be demonstrated by the following test: The rings and balls shall be subjected to a temperature of −80 ± 3°F for 25 hr ± 30 min. Immediately following, the parts shall be subjected to a temperature of +302 ± 3°F for 25 hr ± 30 min. This cycle shall then be repeated for a total of 100 hours. Diameter shall be measured at 68 ± 3°F and compared to values recorded before temperature cycling.

4.7.11 *Lubricant Inspections:*

4.7.11.1 *Lubricant*—Lubricant shall meet the OEM, NSN, Source Control, Spec Control drawing requirements. When required, conformity to a lubricant specification shall be verified by analysis with an infrared spectrometer.

4.7.11.2 *Lubricant Contamination Tests*—All tests shall be performed in a ISO 14644–1, Class 5 environment. Sample bearings shall be tested for lubricant contamination by the following procedure: When required by contract, the bearing supplier shall take three random samples from the lubricating fixture or container of lubricant if a fixture is not used, at the time bearings are lubricated. Samples of grease shall be prepared and read for dirt count in accordance with FED-STD-791, Method 3005. Samples of oil shall be prepared and read for dirt count in accordance with FED-STD-791, Method 3004 or D2273. The bearing's supplier shall maintain the sample and inspection report for examination by the procuring activity's representative and shall certify that the sample was taken from the lubricant used to lubricate the bearings.

4.7.11.3 *Barrier Coat Inspection*—Barrier coated bearings shall be inspected in accordance with MIL-STD-1334.

4.7.12 *Calibration Classification Inspection*—Bore and OD measurements of 4.7.4.1 shall be used to verify conformance to calibration requirements. Individual measurements as specified in 3.6.1 shall be used rather than average values.

5. Packing, Preservation, Packaging and Package Marking

5.1 *Packing*—For acquisition purposes, the packing requirements shall be as specified in the contract or order (see 6.1).

5.1.1 *Preservation and Packaging*—For military procurements, preservation and packaging shall be in accordance with MIL-DTL-197, Method 41B.

5.1.2 *Package Marking*—For military procurements, package marking shall be in accordance with MIL-STD-129. Special marking requirements shall be as specified in the contract or order.

6. Supplementary Requirements

6.1 *Acquisition Requirements*—Procurement documents should specify the following:

6.1.1 Title, number, and date of the specification.

6.1.2 Quantity and part identifying number (PIN) of the bearing required.

6.1.3 Ring, ball, retainer, and closure materials (see 3.2).

6.1.4 Number, type, and location of closures (see 3.4).

6.1.5 Boundary dimensions (see 3.6.1).

6.1.6 Bearing precision level ABEC tolerances (see 3.6.2).

6.1.7 Radial internal clearance or contact angle (see 3.6.4 and 3.6.5).

6.1.8 Type and amount of lubricant (see 3.12.1 and 3.12.3).

6.1.9 Barrier coating requirements (see 3.12.4).

6.1.10 Performance tests required (see 3.7).

6.1.11 Packing, preservation, packaging and package marking requirements (see Section 5).

6.1.12 Marking requirements (see 3.14).

6.2 *Envelope Dimension Size Availability*—The listing of a particular envelope dimension size of a bearing in a specification sheet does not guarantee availability from every manufacturer. Shields or seals, for instance, may not be available on the thinner widths of a particular bore and OD. Recommend verification of availability from industry sources before assignment of PIN.

7. Keywords

7.1 ABEC 5P; ABEC 7P; angular contact; barrier coating; bearing void; calibration (classification); contact angle; counterbored outer ring; deep groove radial; extended inner ring; instrument bearing; nonseparable; passivation; precision bearing; separable; starting torque; stepped inner ring

AVA Documents
Document Sharing Hub

Full document details: ASTM F2332-06(2022)

ANNEXES

(Mandatory Information)

A1. ANNULAR BALL BEARINGS FOR INSTRUMENTS AND PRECISION ROTATING COMPONENTS, DEEP GROOVE, UNFLANGED, CHROMIUM ALLOY STEEL, ABEC 5P

A1.1 Requirements

A1.1.1 *Design*—All bearings described in this specification sheet shall be deep groove instrument bearings, unflanged.

A1.1.2 *Material*—The ball and ring material for these bearings shall be chromium-alloy steel 52100 (UNS G52986) conforming to SAE-AMS 6444.

A1.1.3 *Tolerance Class*— The tolerance class shall be in accordance with the ABEC 5P tolerance tables of ABMA Standard 12.2. This tolerance class shall apply to all bearing sizes listed in Table A1.1.

A1.1.4 *Boundary Dimensions*—The boundary dimensions shall be as specified by the dash number (Dash No.) in Table A1.1.

A1.1.5 *Retainer*—The retainer shall be as specified by the part number designator (PN Des) in Table A1.2.

A1.1.6 *Closures*—The closures shall be as specified by the part number designator in Table A1.3.

A1.1.7 *Radial Internal Clearance*—The radial internal clearance shall be as specified by the part number designator in Table A1.4.

A1.1.8 *Calibration*—The calibration shall be as specified by the part number designator in Table A1.5.

A1.1.9 *Performance Test*—The performance test shall be as specified by the part number designator in Table A1.6.

A1.1.10 *Lubrication:*

A1.1.10.1 *Lubricant*—The lubricant shall be in accordance with the specification specified by the part number designator in Table A1.7.

A1.1.10.2 *Lubricant Amount*—The amount of lubricant shall be as specified by the part number designator in Table A1.8.

A1.1.10.3 *Barrier Coating*— The barrier coating shall be applied to bearings as specified by the part number designator in Table A1.7.

A1.1.11 *Part Number*—The part number consists of the following: prefix letter M; general specification number; number of this specification sheet; dash number; and characters for: retainer, closures, radial internal clearance, calibration, performance test, lubricant, and lubricant amount (see Fig. A1.2).

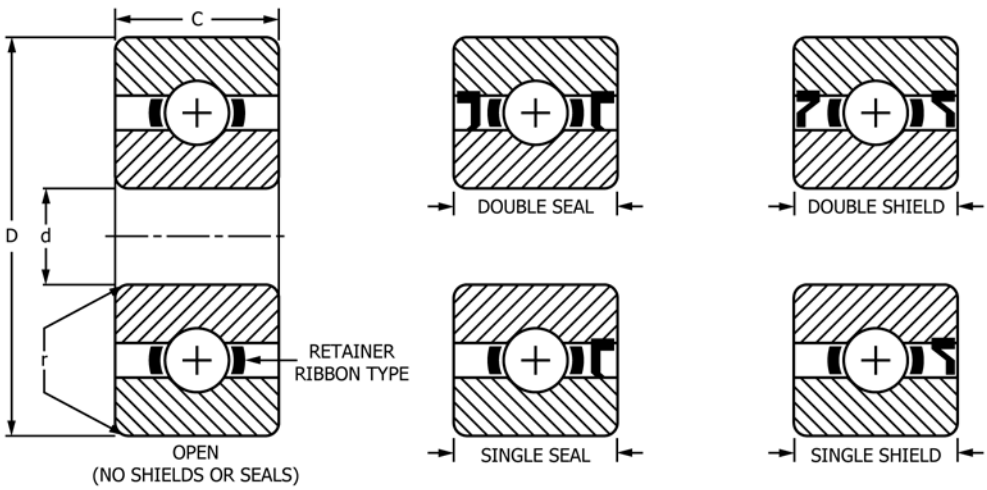

FIG. A1.1 Bearing Configuration

Documents
Document Sharing Hub
Full document details: ASTM F2332-06(2022)

TABLE A1.1 Boundary Dimensions, inches

Dash No.	Bore *d*	OD *D*	Width *C*	Radius *r*[A]
-AA	0.0400	0.1250	0.0469	0.003
-BA	0.0469	0.1562	0.0625	0.003
-BC	0.0469	0.1562	0.0937	0.003
-CA	0.0550	0.1875	0.0781	0.003
-CB	0.0550	0.1875	0.1094	0.003
-DA	0.0781	0.2500	0.0937	0.003
-DB	0.0781	0.2500	0.1406	0.003
-DC	0.0781	0.2500	0.1094	0.003
-EA	0.0937	0.1875	0.0625	0.003
-EB	0.0937	0.1875	0.0937	0.003
-EC	0.0937	0.2500	0.0625	0.003
-ED	0.0937	0.2500	0.0937	0.003
-EE	0.0937	0.2500	0.1094	0.003
-EF	0.0937	0.2883	0.0625	0.003
-EG	0.0937	0.3125	0.0625	0.003
-EH	0.0937	0.3125	0.1094	0.003
-EJ	0.0937	0.3125	0.1406	0.003
-EK	0.0937	0.4100	0.1094	0.003
-FA	0.1250	0.2500	0.0937	0.003
-FB	0.1250	0.2500	0.1094	0.003
-FC	0.1250	0.3125	0.1094	0.003
-FD	0.1250	0.3125	0.1406	0.003
-FE	0.1250	0.3750	0.1094	0.005
-FF	0.1250	0.3750	0.1406	0.005
-FG	0.1250	0.3750	0.1562	0.012
-FH	0.1250	0.4100	0.0937	0.003
-FJ	0.1250	0.4100	0.1094	0.003
-FK	0.1250	0.4250	0.0937	0.003
-FL	0.1250	0.4250	0.1094	0.003
-FM	0.1250	0.4375	0.1094	0.003
-FN	0.1250	0.4375	0.1406	0.003
-FP	0.1250	0.5000	0.1094	0.003
-FR	0.1250	0.5000	0.1719	0.012
-FT	0.1250	0.7500	0.1250	0.010
-FV	0.1250	0.3750	0.0937	0.003
-GA	0.1562	0.3125	0.1094	0.003
-GB	0.1562	0.3125	0.1250	0.003
-HA	0.1875	0.3125	0.1094	0.003
-HB	0.1875	0.3125	0.1250	0.003
-HC	0.1875	0.3750	0.1094	0.003
-HD	0.1875	0.3750	0.1250	0.003
-HE	0.1875	0.4100	0.1094	0.003
-HF	0.1875	0.4250	0.1094	0.003
-HG	0.1875	0.4375	0.1094	0.003
-HH	0.1875	0.5000	0.1094	0.003
-HJ	0.1875	0.5000	0.1562	0.012
-HK	0.1875	0.5000	0.1960	0.012
-HL	0.1875	0.7435	0.1960	0.012
-HM	0.1875	0.7500	0.1960	0.012
-HN	0.1875	0.8750	0.1960	0.012
-JA	0.2500	0.3750	0.1250	0.003
-JB	0.2500	0.5000	0.1094	0.003
-JC	0.2500	0.5000	0.1250	0.005
-JD	0.2500	0.5000	0.1875	0.005
-JE	0.2500	0.6250	0.1960	0.012
-JF	0.2500	0.7500	0.1960	0.012
-JG	0.2500	0.7500	0.2188	0.016
-JH	0.2500	0.7500	0.2812	0.016
-JJ	0.2500	0.8750	0.1960	0.012
-JK	0.2500	1.0000	0.1960	0.012
-JL	0.2500	1.0480	0.1960	0.012
-KA	0.3125	0.5000	0.1562	0.005
-KB	0.3125	0.6250	0.1562	0.010
-LA	0.3750	0.8750	0.2188	0.016
-LB	0.3750	0.8750	0.2812	0.016
-MA	0.5000	0.8750	0.2188	0.016
-MB	0.5000	0.8750	0.2812	0.016
-MC	0.5000	1.1250	0.2500	0.016
-MD	0.5000	1.1250	0.3125	0.016
-NA	0.6250	1.3750	0.2812	0.031
-NB	0.6250	1.3750	0.3438	0.031

[A] Maximum shaft or housing fillet radius that bearing corners will clear.

TABLE A1.2 Retainer

PN Des	Type
0	no retainer, full complement
1	manufacturer's standard[A]
2	crown[B]
3	ribbon, tight-clinched[B]
4	ribbon, loose-clinched[C]
5	PTFE tube separator[D]
7	phenolic laminate[E,F]
8	vacuum-impregnated phenolic[F,G]
9	nonporous, nonmetallic crown[F]

[A] One-piece pressed corrosion-resistant steel crown or two-piece pressed corrosion-resistant steel ribbon.
[B] One-piece pressed corrosion-resistant steel.
[C] Two-piece pressed corrosion-resistant steel.
[D] PTFE (polytetrafluoroethylene).
[E] Phenolic or other porous nonmetallic material.
[F] Used for high-speed applications.
[G] Phenolic or other porous nonmetallic material saturated with lubricant. Selection of this choice dictates choosing manufacturer's standard amount of lubricant.

TABLE A1.3 Closures

PN Des	Number	Type
N	none	none
A	one	shield[A]
C	two	shield[A]
D	one	seal[B]
E	one	seal[C]
H	two	seal[B]
J	two	seal[C]

[A] Corrosion-resistant steel conforming to Specification A580/A580M, Condition A; Specification A240/A240M; Specification A756; or Specification A666 (for shield) and Specification A313/A313M, Type 302, Class 1, or SAE-AMS 5688 for snap rings.
[B] Synthetic rubber.
[C] Glass fiber (polytetrafluoroethylene) or other inert fiber.

TABLE A1.4 Radial Internal Clearance

PN Des	Range, in.
1	0.0001 to 0.0003
2	0.0003 to 0.0005
5	0.0005 to 0.0008
8	0.0008 to 0.0011
9	As specified in contract

TABLE A1.5 Calibration of Bore and Outside Diameter (OD)

PN Des	Bore Increments	OD Increments
N	no calibration	no calibration
A	no calibration	0.00010
B	no calibration	0.00005
C	0.00010	no calibration
D	0.00010	0.00010
E	0.00010	0.00005
F	0.00005	no calibration
G	0.00005	0.00010
H	0.00005	0.00005

AVA Documents
Document Sharing Hub

Full document details: ASTM F2332-06(2022)

TABLE A1.6 Performance Test

PN Des	Type
1	manufacturer's standard
2	starting torque[A]

[A] Starting torque limits from Table 2 of base document.

TABLE A1.7 Lubricant

PN Des	Specification
P	preservative[A]
A	MIL-PRF-6085
B	MIL-PRF-6085[B]
C	DOD-L-81846
D	DOD-L-81846[B]
E	MIL-PRF-23827
F	MIL-PRF-81322
G	MIL-G-81937
H	MIL-PRF-83261
J	MIL-S-81087[C]
K	MIL-S-81087[C]
L	MIL-DTL-53131, Grade 4
M	MIL-DTL-53131, Grade 6
N	MIL-DTL-53131, Grade 9
Q	MIL-DTL-53131, Grade 14
R	MIL-DTL-53131, Grade 40
S	As specified in contract

[A] PN Des "P" shall be used only with PN Des "P" in Table A1.8.
[B] With barrier coat.
[C] Canceled – lube no longer manufactured.

TABLE A1.8 Lubricant Amount

PN Des	Quantity
P	preservative amount as required by MIL-DTL-197
1	manufacturer's standard[A]
2	oil per Table 5 of base document
3	15 % grease
4	25 % grease
5	35 % grease
6	45 % grease
7	As specified in contract

[A] Grease: fill to minimum 25 %, maximum 40 % of bearing void. Oil: immerse and then allow excess to drip off. The standard quantity of oil varies with each bearing size.

Documents
Document Sharing Hub
Full document details: ASTM F2332-06(2022)

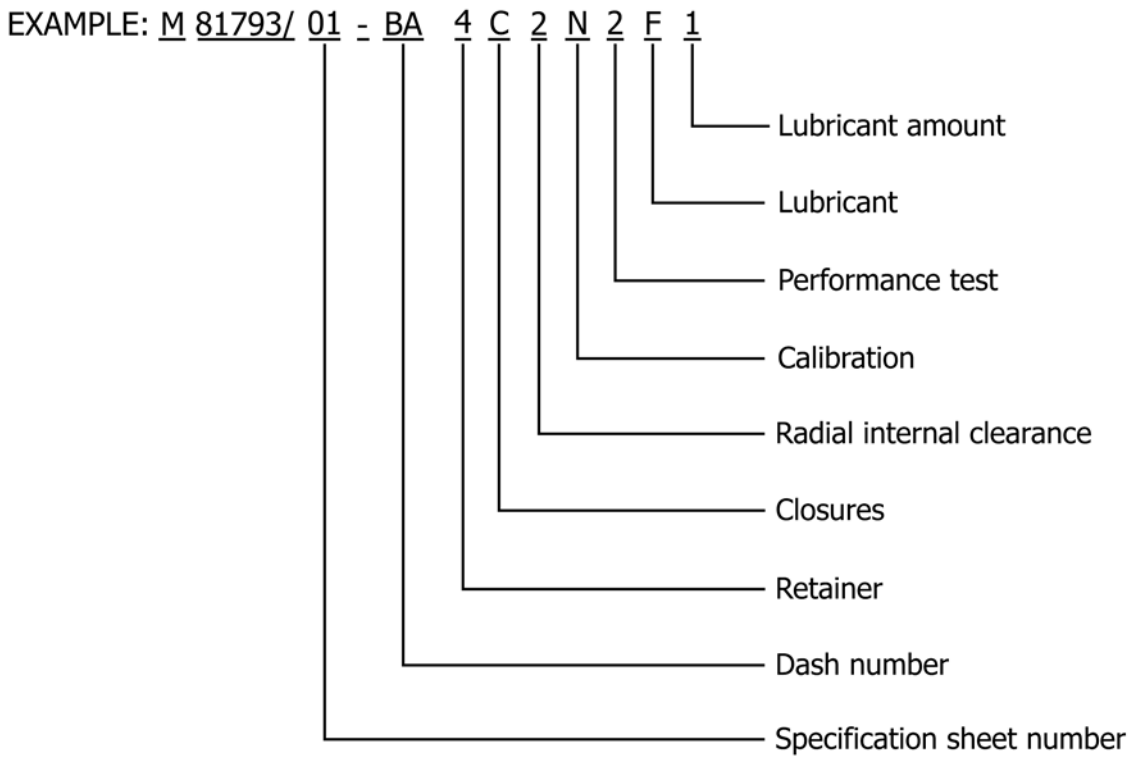

M81793/01-BA4C2N2F1 indicates - Bore 0.0469 in.; outside diameter 0.1562 in.; width 0.0625 in.; radius 0.003 in.; retainer, ribbon, loose clinched; closures, 2 shields; radial internal clearance, 0.0003 in.; to 0.0005 in.; no calibration; performance test, starting torque; lubricant, MIL-PRF-81322; lubricant amount, manufacturer's standard.

FIG. A1.2 Part Number

Documents
Document Sharing Hub

Full document details: ASTM F2332-06(2022)

A2. ANNULAR BALL BEARINGS FOR INSTRUMENTS AND PRECISION ROTATING COMPONENTS, DEEP GROOVE, UNFLANGED, CHROMIUM ALLOY STEEL, ABEC 7P

A2.1 Requirements

A2.1.1 *Design*—All bearings described in this specification sheet shall be deep groove instrument bearings, unflanged.

A2.1.2 *Material*—The ball and ring material for these bearings shall be chromium-alloy steel 52100 (UNS G52986) conforming to SAE-AMS 6444.

A2.1.3 *Tolerance Class*—The tolerance class shall be in accordance with the ABEC 7P tolerance tables of ABMA Standard 12.2. This tolerance class shall apply to all bearing sizes listed in Table A2.1.

A2.1.4 *Boundary Dimensions*—The boundary dimensions shall be as specified by the dash number (Dash No.) in Table A2.1.

A2.1.5 *Retainer*—The retainer shall be as specified by the part number designator (PN Des) in Table A2.2.

A2.1.6 *Closures*—The closures shall be as specified by the part number designator in Table A2.3.

A2.1.7 *Radial Internal Clearance* —The radial internal clearance shall be as specified by the part number designator in Table A2.4.

A2.1.8 *Calibration*—The calibration shall be as specified by the part number designator in Table A2.5.

A2.1.9 *Performance Test*—The performance test shall be as specified by the part number designator in Table A2.6.

A2.1.10 *Lubrication:*

A2.1.10.1 *Lubricant*—The lubricant shall be in accordance with the specification specified by the part number designator in Table A2.7.

A2.1.10.2 *Lubricant Amount*—The amount of lubricant shall be as specified by the part number designator in Table A2.8.

A2.1.10.3 *Barrier Coating*—The barrier coating shall be applied to bearings as specified by the part number designator in Table A2.7.

A2.1.11 *Part Number*—The part number consists of the following: prefix letter M; general specification number; number of this specification sheet; dash number; and characters for: retainer, closures, radial internal clearance, calibration, performance test, lubricant, and lubricant amount (see Fig. A2.2).

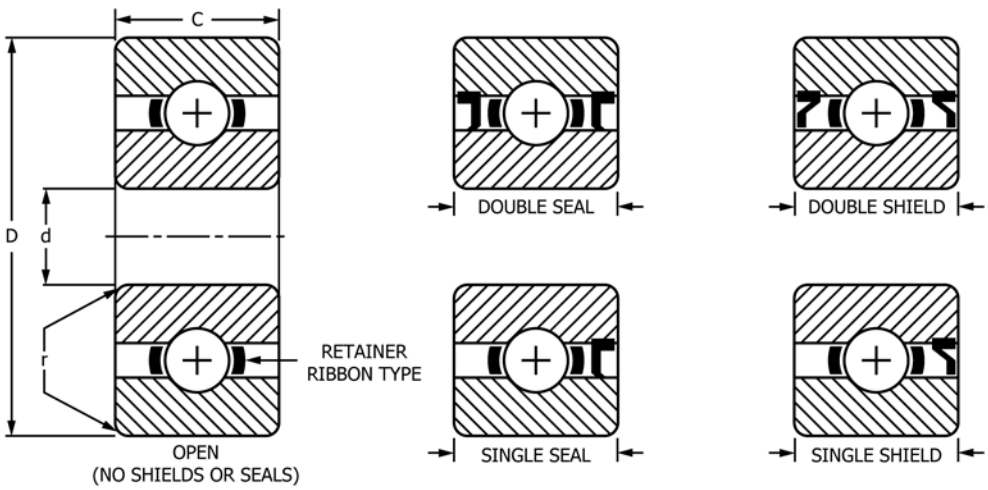

FIG. A2.1 Bearing Configuration

Documents
Document Sharing Hub
Full document details: ASTM F2332-06(2022)

TABLE A2.1 Boundary Dimensions, inches

Dash No.	Bore *d*	OD *D*	Width *C*	Radius *r*[A]
-AA	0.0400	0.1250	0.0469	0.003
-BA	0.0469	0.1562	0.0625	0.003
-BC	0.0469	0.1562	0.0937	0.003
-CA	0.0550	0.1875	0.0781	0.003
-CB	0.0550	0.1875	0.1094	0.003
-DA	0.0781	0.2500	0.0937	0.003
-DB	0.0781	0.2500	0.1406	0.003
-DC	0.0781	0.2500	0.1094	0.003
-EA	0.0937	0.1875	0.0625	0.003
-EB	0.0937	0.1875	0.0937	0.003
-EC	0.0937	0.2500	0.0625	0.003
-ED	0.0937	0.2500	0.0937	0.003
-EE	0.0937	0.2500	0.1094	0.003
-EF	0.0937	0.2883	0.0625	0.003
-EG	0.0937	0.3125	0.0625	0.003
-EH	0.0937	0.3125	0.1094	0.003
-EJ	0.0937	0.3125	0.1406	0.003
-EK	0.0937	0.4100	0.1094	0.003
-FA	0.1250	0.2500	0.0937	0.003
-FB	0.1250	0.2500	0.1094	0.003
-FC	0.1250	0.3125	0.1094	0.003
-FD	0.1250	0.3125	0.1406	0.003
-FE	0.1250	0.3750	0.1094	0.005
-FF	0.1250	0.3750	0.1406	0.005
-FG	0.1250	0.3750	0.1562	0.012
-FH	0.1250	0.4100	0.0937	0.003
-FJ	0.1250	0.4100	0.1094	0.003
-FK	0.1250	0.4250	0.0937	0.003
-FL	0.1250	0.4250	0.1094	0.003
-FM	0.1250	0.4375	0.1094	0.003
-FN	0.1250	0.4375	0.1406	0.003
-FP	0.1250	0.5000	0.1094	0.003
-FR	0.1250	0.5000	0.1719	0.012
-FT	0.1250	0.7500	0.1250	0.010
-FV	0.1250	0.3750	0.0937	0.003
-GA	0.1562	0.3125	0.1094	0.003
-GB	0.1562	0.3125	0.1250	0.003
-HA	0.1875	0.3125	0.1094	0.003
-HB	0.1875	0.3125	0.1250	0.003
-HC	0.1875	0.3750	0.1094	0.003
-HD	0.1875	0.3750	0.1250	0.003
-HE	0.1875	0.4100	0.1094	0.003
-HF	0.1875	0.4250	0.1094	0.003
-HG	0.1875	0.4375	0.1094	0.003
-HH	0.1875	0.5000	0.1094	0.003
-HJ	0.1875	0.5000	0.1562	0.012
-HK	0.1875	0.5000	0.1960	0.012
-HL	0.1875	0.7435	0.1960	0.012
-HM	0.1875	0.7500	0.1960	0.012
-HN	0.1875	0.8750	0.1960	0.012
-JA	0.2500	0.3750	0.1250	0.003
-JB	0.2500	0.5000	0.1094	0.003
-JC	0.2500	0.5000	0.1250	0.005
-JD	0.2500	0.5000	0.1875	0.005
-JE	0.2500	0.6250	0.1960	0.012
-JF	0.2500	0.7500	0.1960	0.012
-JG	0.2500	0.7500	0.2188	0.016
-JH	0.2500	0.7500	0.2812	0.016
-JJ	0.2500	0.8750	0.1960	0.012
-JK	0.2500	1.0000	0.1960	0.012
-JL	0.2500	1.0480	0.1960	0.012
-KA	0.3125	0.5000	0.1562	0.005
-KB	0.3125	0.6250	0.1562	0.010
-LA	0.3750	0.8750	0.2188	0.016
-LB	0.3750	0.8750	0.2812	0.016
-MA	0.5000	0.8750	0.2188	0.016
-MB	0.5000	0.8750	0.2812	0.016
-MC	0.5000	1.1250	0.2500	0.016
-MD	0.5000	1.1250	0.3125	0.016
-NA	0.6250	1.3750	0.2812	0.031
-NB	0.6250	1.3750	0.3438	0.031

[A] Maximum shaft or housing fillet radius that bearing corners will clear.

TABLE A2.2 Retainer

PN Des	Type
0	no retainer, full complement
1	manufacturer's standard[A]
2	crown[B]
3	ribbon, tight-clinched[B]
4	ribbon, loose-clinched[C]
5	PTFE tube separator[D]
7	phenolic laminate[E,F]
8	vacuum-impregnated phenolic[F,G]
9	nonporous, nonmetallic crown[F]

[A] One-piece pressed corrosion-resistant steel crown or two-piece pressed corrosion-resistant steel ribbon.
[B] One-piece pressed corrosion-resistant steel.
[C] Two-piece pressed corrosion-resistant steel.
[D] PTFE (polytetrafluoroethylene).
[E] Phenolic or other porous nonmetallic material.
[F] Used for high-speed applications.
[G] Phenolic or other porous nonmetallic material saturated with lubricant. Selection of this choice dictates choosing manufacturer's standard amount of lubricant.

TABLE A2.3 Closures

PN Des	Number	Type
N	none	none
A	one	shield[A]
C	two	shield[A]
D	one	seal[B]
E	one	seal[C]
H	two	seal[B]
J	two	seal[C]

[A] Corrosion-resistant steel conforming to Specification A580/A580M, Condition A; Specification A240/A240M; Specification A756; or Specification A666 (for shield) and Specification A313/A313M, Type 302, Class 1, or SAE-AMS 5688 for snap rings.
[B] Synthetic rubber.
[C] Glass fiber (polytetrafluoroethylene) or other inert fiber.

TABLE A2.4 Radial Internal Clearance

PN Des	Range, in.
1	0.0001 to 0.0003
2	0.0003 to 0.0005
5	0.0005 to 0.0008
8	0.0008 to 0.0011
9	As specified in contract

TABLE A2.5 Calibration of Bore and Outside Diameter (OD)

PN Des	Bore Increments	OD Increments
N	no calibration	no calibration
A	no calibration	0.00010
B	no calibration	0.00005
C	0.00010	no calibration
D	0.00010	0.00010
E	0.00010	0.00005
F	0.00005	no calibration
G	0.00005	0.00010
H	0.00005	0.00005

AVA Documents
Document Sharing Hub

Full document details: ASTM F2332-06(2022)

TABLE A2.6 Performance Test

PN Des	Type
1	manufacturer's standard
2	starting torque[A]

[A] Starting torque limits from Table 2 of base document.

TABLE A2.7 Lubricant

PN Des	Specification
P	preservative[A]
A	MIL-PRF-6085
B	MIL-PRF-6085[B]
C	DOD-L-81846
D	DOD-L-81846[B]
E	MIL-PRF-23827
F	MIL-PRF-81322
G	MIL-G-81937
H	MIL-PRF-83261
J	MIL-S-81087[C]
K	MIL-S-81087[C]
L	MIL-DTL-53131, Grade 4
M	MIL-DTL-53131, Grade 6
N	MIL-DTL-53131, Grade 9
Q	MIL-DTL-53131, Grade 14
R	MIL-DTL-53131, Grade 40
S	As specified in contract

[A] PN Des "P" shall be used only with PN Des "P" in Table A2.8.
[B] With barrier coat.
[C] Canceled – lube no longer manufactured.

TABLE A2.8 Lubricant Amount

PN Des	Quantity
P	preservative amount as required by MIL-DTL-197
1	manufacturer's standard[A]
2	oil per Table 5 of base document
3	15 % grease
4	25 % grease
5	35 % grease
6	45 % grease
7	As specified in contract

[A] Grease: fill to minimum 25 %, maximum 40 % of bearing void. Oil: immerse and then allow excess to drip off. The standard quantity of oil varies with each bearing size.

Documents
Document Sharing Hub
Full document details: ASTM F2332-06(2022)

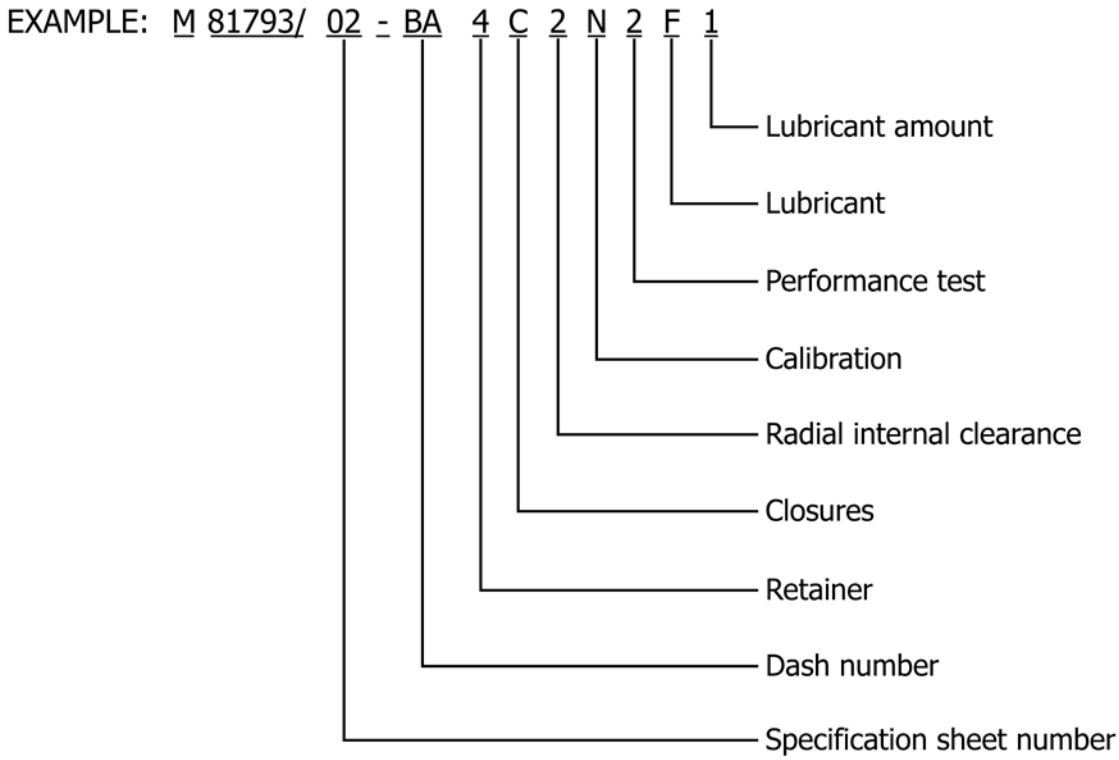

M81793/02-BA4C2N2F1 indicates - Bore 0.0469 in.; outside diameter 0.1562 in.; width 0.0625 in.; radius 0.003 in.; retainer, ribbon, loose clinched; closures, 2 shields; radial internal clearance, 0.0003 in.; to 0.0005 in.; no calibration; performance test, starting torque; lubricant, MIL-PRF-81322; lubricant amount, manufacturer's standard.

FIG. A2.2 Part Number

Documents
Document Sharing Hub
Full document details: ASTM F2332-06(2022)

A3. ANNULAR BALL BEARINGS FOR INSTRUMENTS AND PRECISION ROTATING COMPONENTS, DEEP GROOVE, UNFLANGED, CORROSIONRESISTANT STEEL, ABEC 5P

A3.1 Requirements

A3.1.1 *Design*—All bearings described in this specification sheet shall be deep groove instrument bearings, unflanged.

A3.1.2 *Material*—The ball and ring material for these bearings shall be corrosion-resistant steel 440C (UNS S44004) conforming to SAE-AMS-QQ-S-763.

A3.1.3 *Tolerance Class*—The tolerance class shall be in accordance with the ABEC 5P tolerance tables of ABMA Standard 12.2. This tolerance class shall apply to all bearing sizes listed in Table A3.1.

A3.1.4 *Boundary Dimensions*—The boundary dimensions shall be as specified by the dash number (Dash No.) in Table A3.1.

A3.1.5 *Retainer*—The retainer shall be as specified by the part number designator (PN Des) in Table A3.2.

A3.1.6 *Closures*—The closures shall be as specified by the part number designator in Table A3.3.

A3.1.7 *Radial Internal Clearance* —The radial internal clearance shall be as specified by the part number designator in Table A3.4.

A3.1.8 *Calibration*— The calibration shall be as specified by the part number designator in Table A3.5.

A3.1.9 *Performance Test*—The performance test shall be as specified by the part number designator in Table A3.6.

A3.1.10 *Lubrication:*

A3.1.10.1 *Lubricant*—The lubricant shall be in accordance with the specification specified by the part number designator in Table A3.7.

A3.1.10.2 *Lubricant Amount*—The amount of lubricant shall be as specified by the part number designator in Table A3.8.

A3.1.10.3 *Barrier Coating*— The barrier coating shall be applied to bearings as specified by the part number designator in Table A3.7.

A3.1.11 *Part Number*— The part number consists of the following: prefix letter M; general specification number; number of this specification sheet; dash number; and characters for: retainer, closures, radial internal clearance, calibration, performance test, lubricant, and lubricant amount (see Fig. A3.2).

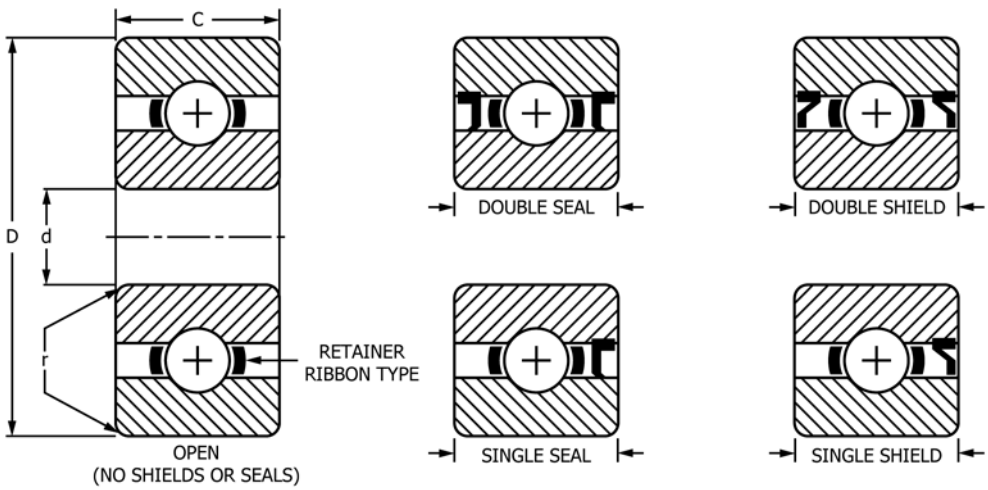

FIG. A3.1 Bearing Configuration

Documents
Document Sharing Hub
Full document details: ASTM F2332-06(2022)

TABLE A3.1 Boundary Dimensions, inches

Dash No.	Bore *d*	OD *D*	Width *C*	Radius *r*[A]
-AA	0.0400	0.1250	0.0469	0.003
-BA	0.0469	0.1562	0.0625	0.003
-BC	0.0469	0.1562	0.0937	0.003
-CA	0.0550	0.1875	0.0781	0.003
-CB	0.0550	0.1875	0.1094	0.003
-DA	0.0781	0.2500	0.0937	0.003
-DB	0.0781	0.2500	0.1406	0.003
-DC	0.0781	0.2500	0.1094	0.003
-EA	0.0937	0.1875	0.0625	0.003
-EB	0.0937	0.1875	0.0937	0.003
-EC	0.0937	0.2500	0.0625	0.003
-ED	0.0937	0.2500	0.0937	0.003
-EE	0.0937	0.2500	0.1094	0.003
-EF	0.0937	0.2883	0.0625	0.003
-EG	0.0937	0.3125	0.0625	0.003
-EH	0.0937	0.3125	0.1094	0.003
-EJ	0.0937	0.3125	0.1406	0.003
-EK	0.0937	0.4100	0.1094	0.003
-FA	0.1250	0.2500	0.0937	0.003
-FB	0.1250	0.2500	0.1094	0.003
-FC	0.1250	0.3125	0.1094	0.003
-FD	0.1250	0.3125	0.1406	0.003
-FE	0.1250	0.3750	0.1094	0.005
-FF	0.1250	0.3750	0.1406	0.005
-FG	0.1250	0.3750	0.1562	0.012
-FH	0.1250	0.4100	0.0937	0.003
-FJ	0.1250	0.4100	0.1094	0.003
-FK	0.1250	0.4250	0.0937	0.003
-FL	0.1250	0.4250	0.1094	0.003
-FM	0.1250	0.4375	0.1094	0.003
-FN	0.1250	0.4375	0.1406	0.003
-FP	0.1250	0.5000	0.1094	0.003
-FR	0.1250	0.5000	0.1719	0.012
-FT	0.1250	0.7500	0.1250	0.010
-FV	0.1250	0.3750	0.0937	0.003
-GA	0.1562	0.3125	0.1094	0.003
-GB	0.1562	0.3125	0.1250	0.003
-HA	0.1875	0.3125	0.1094	0.003
-HB	0.1875	0.3125	0.1250	0.003
-HC	0.1875	0.3750	0.1094	0.003
-HD	0.1875	0.3750	0.1250	0.003
-HE	0.1875	0.4100	0.1094	0.003
-HF	0.1875	0.4250	0.1094	0.003
-HG	0.1875	0.4375	0.1094	0.003
-HH	0.1875	0.5000	0.1094	0.003
-HJ	0.1875	0.5000	0.1562	0.012
-HK	0.1875	0.5000	0.1960	0.012
-HL	0.1875	0.7435	0.1960	0.012
-HM	0.1875	0.7500	0.1960	0.012
-HN	0.1875	0.8750	0.1960	0.012
-JA	0.2500	0.3750	0.1250	0.003
-JB	0.2500	0.5000	0.1094	0.003
-JC	0.2500	0.5000	0.1250	0.005
-JD	0.2500	0.5000	0.1875	0.005
-JE	0.2500	0.6250	0.1960	0.012
-JF	0.2500	0.7500	0.1960	0.012
-JG	0.2500	0.7500	0.2188	0.016
-JH	0.2500	0.7500	0.2812	0.016
-JJ	0.2500	0.8750	0.1960	0.012
-JK	0.2500	1.0000	0.1960	0.012
-JL	0.2500	1.0480	0.1960	0.012
-KA	0.3125	0.5000	0.1562	0.005
-KB	0.3125	0.6250	0.1562	0.010
-LA	0.3750	0.8750	0.2188	0.016
-LB	0.3750	0.8750	0.2812	0.016
-MA	0.5000	0.8750	0.2188	0.016
-MB	0.5000	0.8750	0.2812	0.016
-MC	0.5000	1.1250	0.2500	0.016
-MD	0.5000	1.1250	0.3125	0.016
-NA	0.6250	1.3750	0.2812	0.031
-NB	0.6250	1.3750	0.3438	0.031

[A] Maximum shaft or housing fillet radius that bearing corners will clear.

TABLE A3.2 Retainer

PN Des	Type
0	no retainer, full complement
1	manufacturer's standard[A]
2	crown[B]
3	ribbon, tight-clinched[B]
4	ribbon, loose-clinched[C]
5	PTFE tube separator[D]
7	phenolic laminate[E,F]
8	vacuum-impregnated phenolic[F,G]
9	nonporous, nonmetallic crown[F]

[A] One-piece pressed corrosion-resistant steel crown or two-piece pressed corrosion-resistant steel ribbon.
[B] One-piece pressed corrosion-resistant steel.
[C] Two-piece pressed corrosion-resistant steel.
[D] PTFE (polytetrafluoroethylene).
[E] Phenolic or other porous nonmetallic material.
[F] Used for high-speed applications.
[G] Phenolic or other porous nonmetallic material saturated with lubricant. Selection of this choice dictates choosing manufacturer's standard amount of lubricant.

TABLE A3.3 Closures

PN Des	Number	Type
N	none	none
A	one	shield[A]
C	two	shield[A]
D	one	seal[B]
E	one	seal[C]
H	two	seal[B]
J	two	seal[C]

[A] Corrosion-resistant steel conforming to Specification A580/A580M, Condition A; Specification A240/A240M; Specification A756; or Specification A666 (for shield) and Specification A313/A313M, Type 302, Class 1, or SAE-AMS 5688 for snap rings.
[B] Synthetic rubber.
[C] Glass fiber (polytetrafluoroethylene) or other inert fiber.

TABLE A3.4 Radial Internal Clearance

PN Des	Range, in.
1	0.0001 to 0.0003
2	0.0003 to 0.0005
5	0.0005 to 0.0008
8	0.0008 to 0.0011
9	As specified in contract

TABLE A3.5 Calibration of Bore and Outside Diameter (OD)

PN Des	Bore Increments	OD Increments
N	no calibration	no calibration
A	no calibration	0.00010
B	no calibration	0.00005
C	0.00010	no calibration
D	0.00010	0.00010
E	0.00010	0.00005
F	0.00005	no calibration
G	0.00005	0.00010
H	0.00005	0.00005

AVA Documents
Document Sharing Hub

Full document details: ASTM F2332-06(2022)

TABLE A3.6 Performance Test

PN Des	Type
1	manufacturer's standard
2	starting torque[A]

[A] Starting torque limits from Table 2 of base document.

TABLE A3.7 Lubricant

PN Des	Specification
P	preservative[A]
A	MIL-PRF-6085
B	MIL-PRF-6085[B]
C	DOD-L-81846
D	DOD-L-81846[B]
E	MIL-PRF-23827
F	MIL-PRF-81322
G	MIL-G-81937
H	MIL-PRF-83261
J	MIL-S-81087[C]
K	MIL-S-81087[C]
L	MIL-DTL-53131, Grade 4
M	MIL-DTL-53131, Grade 6
N	MIL-DTL-53131, Grade 9
Q	MIL-DTL-53131, Grade 14
R	MIL-DTL-53131, Grade 40
S	As specified in contract

[A] PN Des "P" shall be used only with PN Des "P" in Table A3.8.
[B] With barrier coat.
[C] Canceled – lube no longer manufactured.

TABLE A3.8 Lubricant Amount

PN Des	Quantity
P	preservative amount as required by MIL-DTL-197
1	manufacturer's standard[A]
2	oil per Table 5 of base document
3	15 % grease
4	25 % grease
5	35 % grease
6	45 % grease
7	As specified in contract

[A] Grease: fill to minimum 25 %, maximum 40 % of bearing void. Oil: immerse and then allow excess to drip off. The standard quantity of oil varies with each bearing size.

Documents
Document Sharing Hub
Full document details: ASTM F2332-06(2022)

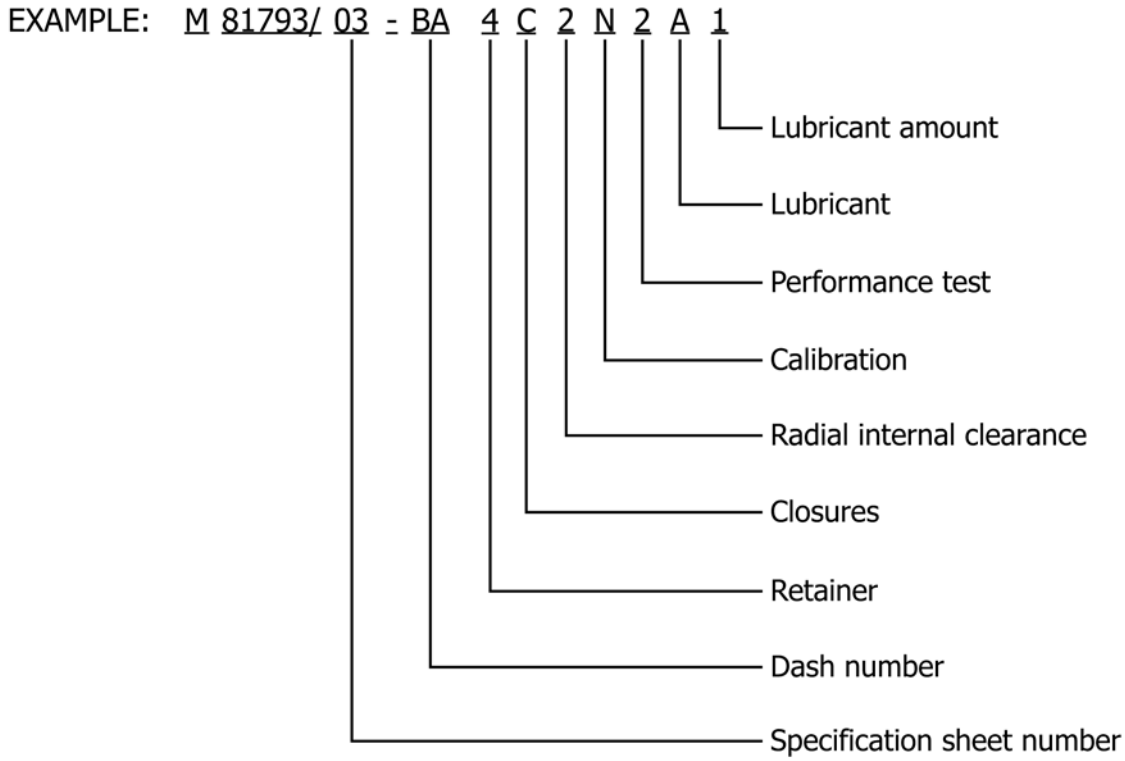

M81793/03-BA4C2N2A1 indicates - Bore 0.0469 in.; outside diameter 0.1562 in.; width 0.0625 in.; radius 0.003 in.; retainer, ribbon, loose clinched; closures, 2 shields; radial internal clearance, 0.0003 in.; to 0.0005 in.; no calibration; performance test, starting torque; lubricant, MIL-PRF-6085; lubricant amount, manufacturer's standard.

FIG. A3.2 Part Number

Documents
Document Sharing Hub
Full document details: ASTM F2332-06(2022)

A4. ANNULAR BALL BEARINGS FOR INSTRUMENTS AND PRECISION ROTATING COMPONENTS, DEEP GROOVE, UNFLANGED, CORROSIONRESISTANT STEEL, ABEC 7P

A4.1 Requirements

A4.1.1 *Design*—All bearings described in this specification sheet shall be deep groove instrument bearings, unflanged.

A4.1.2 *Material*—The ball and ring material for these bearings shall be corrosion-resistant steel 440C (UNS S44004) conforming to SAE-AMS-QQ-S-763.

A4.1.3 *Tolerance Class*— The tolerance class shall be in accordance with the ABEC 7P tolerance tables of ABMA Standard 12.2. This tolerance class shall apply to all bearing sizes listed in Table A4.1.

A4.1.4 *Boundary Dimensions*—The boundary dimensions shall be as specified by the dash number (Dash No.) in Table A4.1.

A4.1.5 *Retainer*—The retainer shall be as specified by the part number designator (PN Des) in Table A4.2.

A4.1.6 *Closures*—The closures shall be as specified by the part number designator in Table A4.3.

A4.1.7 *Radial Internal Clearance* —The radial internal clearance shall be as specified by the part number designator in Table A4.4.

A4.1.8 *Calibration*— The calibration shall be as specified by the part number designator in Table A4.5.

A4.1.9 *Performance Test*—The performance test shall be as specified by the part number designator in Table A4.6.

A4.1.10 *Lubrication:*

A4.1.10.1 *Lubricant*—The lubricant shall be in accordance with the specification specified by the part number designator in Table A4.7.

A4.1.10.2 *Lubricant Amount*—The amount of lubricant shall be as specified by the part number designator in Table A4.8.

A4.1.10.3 *Barrier Coating*— The barrier coating shall be applied to bearings as specified by the part number designator in Table A4.7.

A4.1.11 *Part Number*— The part number consists of the following: prefix letter M; general specification number; number of this specification sheet; dash number; and characters for: retainer, closures, radial internal clearance, calibration, performance test, lubricant, and lubricant amount (see Fig. A4.2).

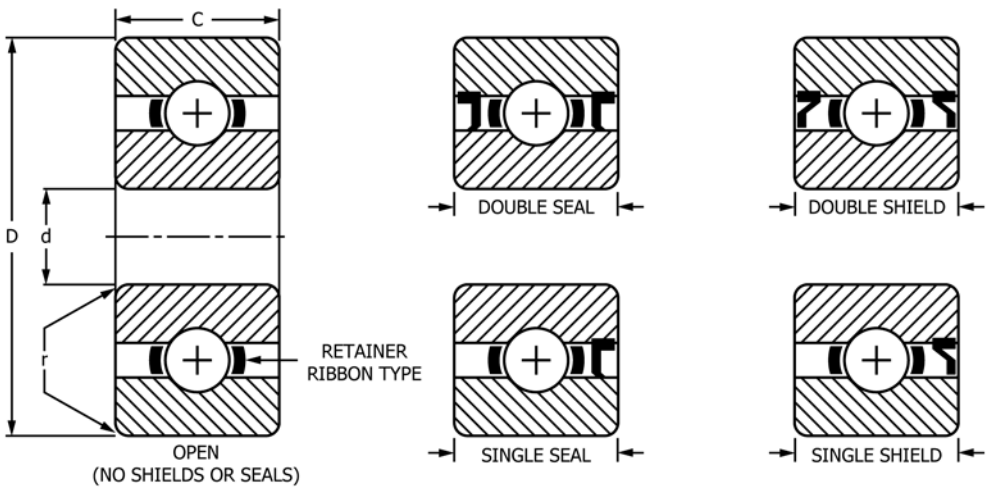

FIG. A4.1 Bearing Configuration

Documents
Document Sharing Hub
Full document details: ASTM F2332-06(2022)

TABLE A4.1 Boundary Dimensions, inches

Dash No.	Bore *d*	OD *D*	Width *C*	Radius *r*[A]
-AA	0.0400	0.1250	0.0469	0.003
-BA	0.0469	0.1562	0.0625	0.003
-BC	0.0469	0.1562	0.0937	0.003
-CA	0.0550	0.1875	0.0781	0.003
-CB	0.0550	0.1875	0.1094	0.003
-DA	0.0781	0.2500	0.0937	0.003
-DB	0.0781	0.2500	0.1406	0.003
-DC	0.0781	0.2500	0.1094	0.003
-EA	0.0937	0.1875	0.0625	0.003
-EB	0.0937	0.1875	0.0937	0.003
-EC	0.0937	0.2500	0.0625	0.003
-ED	0.0937	0.2500	0.0937	0.003
-EE	0.0937	0.2500	0.1094	0.003
-EF	0.0937	0.2883	0.0625	0.003
-EG	0.0937	0.3125	0.0625	0.003
-EH	0.0937	0.3125	0.1094	0.003
-EJ	0.0937	0.3125	0.1406	0.003
-EK	0.0937	0.4100	0.1094	0.003
-FA	0.1250	0.2500	0.0937	0.003
-FB	0.1250	0.2500	0.1094	0.003
-FC	0.1250	0.3125	0.1094	0.003
-FD	0.1250	0.3125	0.1406	0.003
-FE	0.1250	0.3750	0.1094	0.005
-FF	0.1250	0.3750	0.1406	0.005
-FG	0.1250	0.3750	0.1562	0.012
-FH	0.1250	0.4100	0.0937	0.003
-FJ	0.1250	0.4100	0.1094	0.003
-FK	0.1250	0.4250	0.0937	0.003
-FL	0.1250	0.4250	0.1094	0.003
-FM	0.1250	0.4375	0.1094	0.003
-FN	0.1250	0.4375	0.1406	0.003
-FP	0.1250	0.5000	0.1094	0.003
-FR	0.1250	0.5000	0.1719	0.012
-FT	0.1250	0.7500	0.1250	0.010
-FV	0.1250	0.3750	0.0937	0.003
-GA	0.1562	0.3125	0.1094	0.003
-GB	0.1562	0.3125	0.1250	0.003
-HA	0.1875	0.3125	0.1094	0.003
-HB	0.1875	0.3125	0.1250	0.003
-HC	0.1875	0.3750	0.1094	0.003
-HD	0.1875	0.3750	0.1250	0.003
-HE	0.1875	0.4100	0.1094	0.003
-HF	0.1875	0.4250	0.1094	0.003
-HG	0.1875	0.4375	0.1094	0.003
-HH	0.1875	0.5000	0.1094	0.003
-HJ	0.1875	0.5000	0.1562	0.012
-HK	0.1875	0.5000	0.1960	0.012
-HL	0.1875	0.7435	0.1960	0.012
-HM	0.1875	0.7500	0.1960	0.012
-HN	0.1875	0.8750	0.1960	0.012
-JA	0.2500	0.3750	0.1250	0.003
-JB	0.2500	0.5000	0.1094	0.003
-JC	0.2500	0.5000	0.1250	0.005
-JD	0.2500	0.5000	0.1875	0.005
-JE	0.2500	0.6250	0.1960	0.012
-JF	0.2500	0.7500	0.1960	0.012
-JG	0.2500	0.7500	0.2188	0.016
-JH	0.2500	0.7500	0.2812	0.016
-JJ	0.2500	0.8750	0.1960	0.012
-JK	0.2500	1.0000	0.1960	0.012
-JL	0.2500	1.0480	0.1960	0.012
-KA	0.3125	0.5000	0.1562	0.005
-KB	0.3125	0.6250	0.1562	0.010
-LA	0.3750	0.8750	0.2188	0.016
-LB	0.3750	0.8750	0.2812	0.016
-MA	0.5000	0.8750	0.2188	0.016
-MB	0.5000	0.8750	0.2812	0.016
-MC	0.5000	1.1250	0.2500	0.016
-MD	0.5000	1.1250	0.3125	0.016
-NA	0.6250	1.3750	0.2812	0.031
-NB	0.6250	1.3750	0.3438	0.031

[A] Maximum shaft or housing fillet radius that bearing corners will clear.

TABLE A4.2 Retainer

PN Des	Type
0	no retainer, full complement
1	manufacturer's standard[A]
2	crown[B]
3	ribbon, tight-clinched[B]
4	ribbon, loose-clinched[C]
5	PTFE tube separator[D]
7	phenolic laminate[E,F]
8	vacuum-impregnated phenolic[F,G]
9	nonporous, nonmetallic crown[F]

[A] One-piece pressed corrosion-resistant steel crown or two-piece pressed corrosion-resistant steel ribbon.
[B] One-piece pressed corrosion-resistant steel.
[C] Two-piece pressed corrosion-resistant steel.
[D] PTFE (polytetrafluoroethylene).
[E] Phenolic or other porous nonmetallic material.
[F] Used for high-speed applications.
[G] Phenolic or other porous nonmetallic material saturated with lubricant. Selection of this choice dictates choosing manufacturer's standard amount of lubricant.

TABLE A4.3 Closures

PN Des	Number	Type
N	none	none
A	one	shield[A]
C	two	shield[A]
D	one	seal[B]
E	one	seal[C]
H	two	seal[B]
J	two	seal[C]

[A] Corrosion-resistant steel conforming to Specification A580/A580M, Condition A; Specification A240/A240M; Specification A756; or Specification A666 (for shield) and Specification A313/A313M, Type 302, Class 1, or SAE-AMS 5688 for snap rings.
[B] Synthetic rubber.
[C] Glass fiber (polytetrafluoroethylene) or other inert fiber.

TABLE A4.4 Radial Internal Clearance

PN Des	Range, in.
1	0.0001 to 0.0003
2	0.0003 to 0.0005
5	0.0005 to 0.0008
8	0.0008 to 0.0011
9	As specified in contract

TABLE A4.5 Calibration of Bore and Outside Diameter (OD)

PN Des	Bore Increments	OD Increments
N	no calibration	no calibration
A	no calibration	0.00010
B	no calibration	0.00005
C	0.00010	no calibration
D	0.00010	0.00010
E	0.00010	0.00005
F	0.00005	no calibration
G	0.00005	0.00010
H	0.00005	0.00005

AVA Documents
Document Sharing Hub

Full document details: ASTM F2332-06(2022)

TABLE A4.6 Performance Test

PN Des	Type
1	manufacturer's standard
2	starting torque[A]

[A] Starting torque limits from Table 2 of base document.

TABLE A4.7 Lubricant

PN Des	Specification
P	preservative[A]
A	MIL-PRF-6085
B	MIL-PRF-6085[B]
C	DOD-L-81846
D	DOD-L-81846[B]
E	MIL-PRF-23827
F	MIL-PRF-81322
G	MIL-G-81937
H	MIL-PRF-83261
J	MIL-S-81087[C]
K	MIL-S-81087[C]
L	MIL-DTL-53131, Grade 4
M	MIL-DTL-53131, Grade 6
N	MIL-DTL-53131, Grade 9
Q	MIL-DTL-53131, Grade 14
R	MIL-DTL-53131, Grade 40
S	As specified in contract

[A] PN Des "P" shall be used only with PN Des "P" in Table A4.8.
[B] With barrier coat.
[C] Canceled – lube no longer manufactured.

TABLE A4.8 Lubricant Amount

PN Des	Quantity
P	preservative amount as required by MIL-DTL-197
1	manufacturer's standard[A]
2	oil per Table 5 of base document
3	15 % grease
4	25 % grease
5	35 % grease
6	45 % grease
7	As specified in contract

[A] Grease: fill to minimum 25 %, maximum 40 % of bearing void. Oil: immerse and then allow excess to drip off. The standard quantity of oil varies with each bearing size.

Documents
Document Sharing Hub
Full document details: ASTM F2332-06(2022)

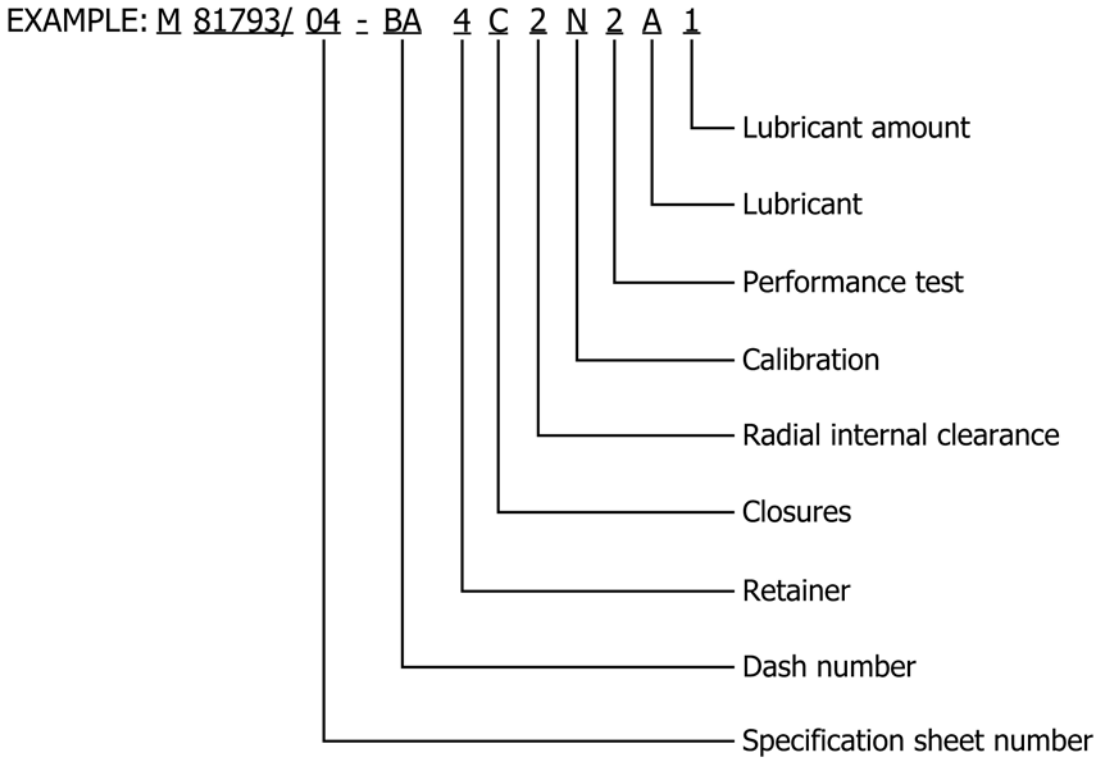

M81793/03-BA4C2N2A1 indicates - Bore 0.0469 in.; outside diameter 0.1562 in.; width 0.0625 in.; radius 0.003 in.; retainer, ribbon, loose clinched; closures, 2 shields; radial internal clearance, 0.0003 in.; to 0.0005 in.; no calibration; performance test, starting torque; lubricant, MIL-PRF-6085; lubricant amount, manufacturer's standard.

FIG. A4.2 Part Number

Documents
Document Sharing Hub
Full document details: ASTM F2332-06(2022)

A5. ANNULAR BALL BEARINGS FOR INSTRUMENTS AND PRECISION ROTATING COMPONENTS, DEEP GROOVE, FLANGED, CHROMIUM ALLOY STEEL, ABEC 5P

A5.1 Requirements

A5.1.1 *Design*—All bearings described in this specification sheet shall be deep groove instrument bearings, flanged.

A5.1.2 *Material*—The ball and ring material for these bearings shall be chromium-alloy steel 52100 (UNS G52986) conforming to SAE-AMS 6444.

A5.1.3 *Tolerance Class*— The tolerance class shall be in accordance with the ABEC 5P tolerance tables of ABMA Standard 12.2. This tolerance class shall apply to all bearing sizes listed in Table A5.1.

A5.1.4 *Boundary Dimensions*—The boundary dimensions shall be as specified by the dash number (Dash No.) in Table A5.1.

A5.1.5 *Retainer*—The retainer shall be as specified by the part number designator (PN Des) in Table A5.2.

A5.1.6 *Closures*—The closures shall be as specified by the part number designator in Table A5.3.

A5.1.7 *Radial Internal Clearance* —The radial internal clearance shall be as specified by the part number designator in Table A5.4.

A5.1.8 *Calibration*— The calibration shall be as specified by the part number designator in Table A5.5.

A5.1.9 *Performance Test*—The performance test shall be as specified by the part number designator in Table A5.6.

A5.1.10 *Lubrication:*

A5.1.10.1 *Lubricant*—The lubricant shall be in accordance with the specification specified by the part number designator in Table A5.7.

A5.1.10.2 *Lubricant Amount*—The amount of lubricant shall be as specified by the part number designator in Table A5.8.

A5.1.10.3 *Barrier Coating*— The barrier coating shall be applied to bearings as specified by the part number designator in Table A5.7.

A5.1.11 *Part Number*— The part number consists of the following: prefix letter M; general specification number; number of this specification sheet; dash number; and characters for: retainer, closures, radial internal clearance, calibration, performance test, lubricant, and lubricant amount (see Fig. A5.2).

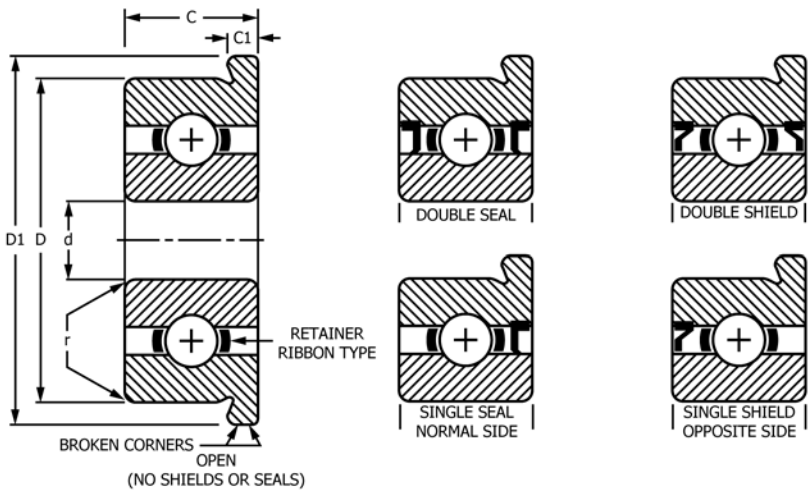

FIG. A5.1 Bearing Configuration

Documents
Document Sharing Hub
Full document details: ASTM F2332-06(2022)

TABLE A5.1 Boundary Dimensions, inches

Dash No.	Bore d	OD D	Width C	Flange OD D_1	Flange Width C_1	Radius r^A
-AA	0.0400	0.1250	0.0469	0.171	0.013	0.003
-BA	0.0469	0.1562	0.0625	0.203	0.013	0.003
-BB	0.0469	0.1562	0.0937	0.203	0.031	0.003
-CA	0.0550	0.1875	0.0781	0.234	0.023	0.003
-CB	0.0550	0.1875	0.1094	0.234	0.031	0.003
-DA	0.0781	0.2500	0.0937	0.296	0.023	0.003
-DB	0.0781	0.2500	0.1406	0.296	0.031	0.003
-EA	0.0937	0.1875	0.0625	0.234	0.018	0.003
-EB	0.0937	0.1875	0.0937	0.234	0.031	0.003
-EC	0.0937	0.3125	0.1094	0.359	0.023	0.003
-ED	0.0937	0.3125	0.1406	0.359	0.031	0.003
-FA	0.1250	0.2500	0.0937	0.296	0.023	0.003
-FB	0.1250	0.2500	0.1094	0.296	0.031	0.003
-FC	0.1250	0.3125	0.1094	0.359	0.023	0.003
-FD	0.1250	0.3125	0.1406	0.359	0.031	0.003
-FE	0.1250	0.3750	0.1094	0.422	0.023	0.005
-FF	0.1250	0.3750	0.1406	0.422	0.031	0.005
-FG	0.1250	0.3750	0.1562	0.440	0.030	0.012
-GA	0.1562	0.3125	0.1094	0.359	0.023	0.003
-GB	0.1562	0.3125	0.1250	0.359	0.036	0.003
-HA	0.1875	0.3750	0.1250	0.422	0.023	0.003
-HB	0.1875	0.3750	0.1250	0.422	0.031	0.003
-HC	0.1875	0.5000	0.1562	0.565	0.042	0.012
-HD	0.1875	0.5000	0.1960	0.565	0.042	0.012
-HE	0.1875	0.3125	0.1094	0.359	0.023	0.003
-HF	0.1875	0.3125	0.1250	0.359	0.036	0.003
-JA	0.2500	0.3750	0.1250	0.422	0.023	0.003
-JB	0.2500	0.3750	0.1250	0.422	0.036	0.003
-JC	0.2500	0.5000	0.1250	0.547	0.023	0.005
-JD	0.2500	0.5000	0.1875	0.547	0.045	0.005
-JE	0.2500	0.6250	0.1960	0.690	0.042	0.012
-KA	0.3125	0.5000	0.1562	0.547	0.031	0.005
-LA	0.3750	0.8750	0.2188	0.969	0.062	0.016
-LB	0.3750	0.8750	0.2812	0.969	0.062	0.016
-MA	0.5000	1.1250	0.2500	1.225	0.062	0.016
-MB	0.5000	1.1250	0.3125	1.225	0.062	0.016

[A] Maximum shaft or housing fillet radius that bearing corners will clear.

TABLE A5.2 Retainer

PN Des	Type
0	no retainer, full complement
1	manufacturer's standard[A]
2	crown[B]
3	ribbon, tight-clinched[B]
4	ribbon, loose-clinched[C]
5	PTFE tube separator[D]
7	phenolic laminate[E,F]
8	vacuum-impregnated phenolic[F,G]
9	nonporous, nonmetallic crown[F]

[A] One-piece pressed corrosion-resistant steel crown or two-piece pressed corrosion-resistant steel ribbon.
[B] One-piece pressed corrosion-resistant steel.
[C] Two-piece pressed corrosion-resistant steel.
[D] PTFE (polytetrafluoroethylene).
[E] Phenolic or other porous nonmetallic material.
[F] Used for high-speed applications.
[G] Phenolic or other porous nonmetallic material saturated with lubricant. Selection of this choice dictates choosing manufacturer's standard amount of lubricant.

TABLE A5.3 Closures

PN Des	Number	Type	Locations
N	none	none	
A	one	shield[A]	normal[B]
B	one	shield[A]	opposite[C]
C	two	shield[A]	
D	one	seal[D]	snrmal[B]
E	one	seal[E]	normal[B]
F	one	seal[D]	opposite[C]
G	one	seal[E]	opposite[C]
H	two	seal[D]	
J	two	seal[E]	

[A] Corrosion-resistant steel conforming to Specification A580/A580M, Condition A; Specification A240/A240M; Specification A756; or Specification A666 (for shield) and Specification A313/A313M, Type 302, Class 1, or SAE-AMS 5688 for snap rings.
[B] On flange side.
[C] On side opposite flange.
[D] Synthetic rubber.
[E] Glass fiber (polytetrafluoroethylene) or other inert fiber.

TABLE A5.4 Radial Internal Clearance

PN Des	Range, in.
1	0.0001 to 0.0003
2	0.0003 to 0.0005
5	0.0005 to 0.0008
8	0.0008 to 0.0011
9	As specified in contract

TABLE A5.5 Calibration of Bore and Outside Diameter (OD)

PN Des	Bore Increments	OD Increments
N	no calibration	no calibration
A	no calibration	0.00010
B	no calibration	0.00005
C	0.00010	no calibration
D	0.00010	0.00010
E	0.00010	0.00005
F	0.00005	no calibration
G	0.00005	0.00010
H	0.00005	0.00005

Documents
Document Sharing Hub
Full document details: ASTM F2332-06(2022)

TABLE A5.6 Performance Test

PN Des	Type
1	manufacturer's standard
2	starting torque[A]

[A] Starting torque limits from Table 2 of base document.

TABLE A5.7 Lubricant

PN Des	Specification
P	preservative[A]
A	MIL-PRF-6085
B	MIL-PRF-6085[B]
C	DOD-L-81846
D	DOD-L-81846[B]
E	MIL-PRF-23827
F	MIL-PRF-81322
G	MIL-G-81937
H	MIL-PRF-83261
J	MIL-S-81087[C]
K	MIL-S-81087[C]
L	MIL-DTL-53131, Grade 4
M	MIL-DTL-53131, Grade 6
N	MIL-DTL-53131, Grade 9
Q	MIL-DTL-53131, Grade 14
R	MIL-DTL-53131, Grade 40
S	As specified in contract

[A] PN Des "P" shall be used only with PN Des "P" in Table A5.8.
[B] With barrier coat.
[C] Canceled – lube no longer manufactured.

TABLE A5.8 Lubricant Amount

PN Des	Quantity
P	preservative amount as required by MIL-DTL-197
1	manufacturer's standard[A]
2	oil per Table 5 of base document
3	15 % grease
4	25 % grease
5	35 % grease
6	45 % grease
7	As specified in contract

[A] Grease: fill to minimum 25 %, maximum 40 % of bearing void. Oil: immerse and then allow excess to drip off. The standard quantity of oil varies with each bearing size.

Documents
Document Sharing Hub
Full document details: ASTM F2332-06(2022)

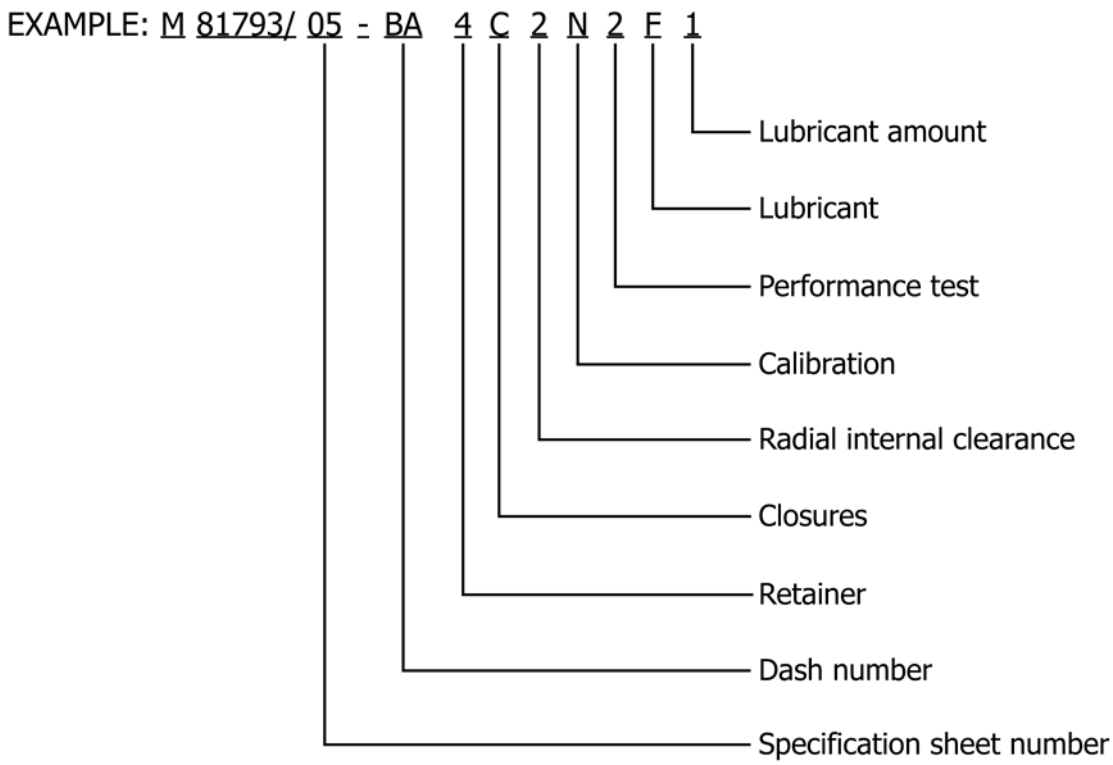

M81793/05-BA4C2N2F1 indicates - Bore 0.0469 in.; outside diameter 0.1562 in.; width 0.0625 in.; flange OD 0.203 in.; flange width 0.013 in.; radius 0.003 in.; retainer, ribbon, loose clinched; closures, 2 shields; radial internal clearance, 0.0003 in.; to 0.0005 in.; no calibration; performance test, starting torque; lubricant, MIL-PRF-81322; lubricant amount, manufacturer's standard.

FIG. A5.2 Part Number

Documents
Document Sharing Hub
Full document details: ASTM F2332-06(2022)

A6. ANNULAR BALL BEARINGS FOR INSTRUMENTS AND PRECISION ROTATING COMPONENTS, DEEP GROOVE, FLANGED, CHROMIUM ALLOY STEEL, ABEC 7P

A6.1 Requirements

A6.1.1 *Design*—All bearings described in this specification sheet shall be deep groove instrument bearings, flanged.

A6.1.2 *Material*—The ball and ring material for these bearings shall be chromium-alloy steel 52100 (UNS G52986) conforming to SAE-AMS 6444.

A6.1.3 *Tolerance Class*— The tolerance class shall be in accordance with the ABEC 7P tolerance tables of ABMA Standard 12.2. This tolerance class shall apply to all bearing sizes listed in Table A6.1.

A6.1.4 *Boundary Dimensions*—The boundary dimensions shall be as specified by the dash number (Dash No.) in Table A6.1.

A6.1.5 *Retainer*—The retainer shall be as specified by the part number designator (PN Des) in Table A6.2.

A6.1.6 *Closures*—The closures shall be as specified by the part number designator in Table A6.3.

A6.1.7 *Radial Internal Clearance* —The radial internal clearance shall be as specified by the part number designator in Table A6.4.

A6.1.8 *Calibration*— Calibration shall be as specified by the part number designator in Table A6.5.

A6.1.9 *Performance Test*—The performance test shall be as specified by the part number designator in Table A6.6.

A6.1.10 *Lubrication:*

A6.1.10.1 *Lubricant*—The lubricant shall be in accordance with the specification specified by the part number designator in Table A6.7.

A6.1.10.2 *Lubricant Amount*—The amount of lubricant shall be as specified by the part number designator in Table A6.8.

A6.1.10.3 *Barrier Coating*— The barrier coating shall be applied to bearings as specified by the part number designator in Table A6.7.

A6.1.11 *Part Number*— The part number consists of the following: prefix letter M; general specification number; number of this specification sheet; dash number; and characters for: retainer, closures, radial internal clearance, calibration, performance test, lubricant, and lubricant amount (see Fig. A6.2).

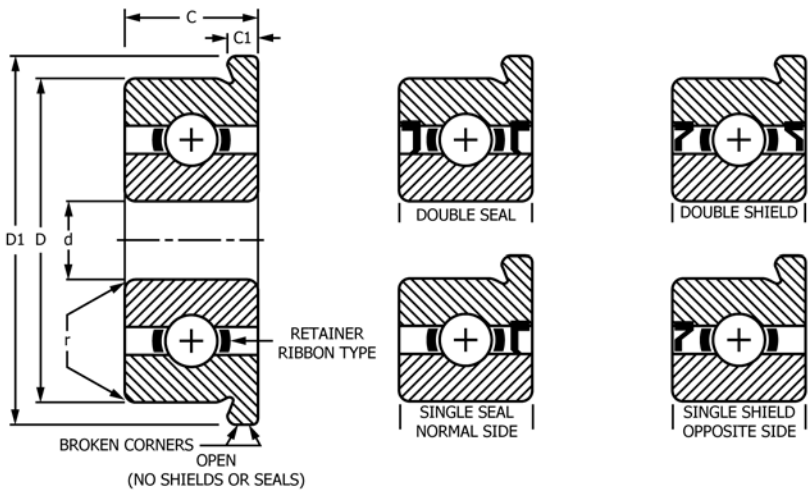

FIG. A6.1 Bearing Configuration

Documents
Document Sharing Hub
Full document details: ASTM F2332-06(2022)

TABLE A6.1 Boundary Dimensions, inches

Dash No.	Bore *d*	OD *D*	Width *C*	Flange OD D_1	Flange Width C_1	Radius *r*[A]
-AA	0.0400	0.1250	0.0469	0.171	0.013	0.003
-BA	0.0469	0.1562	0.0625	0.203	0.013	0.003
-BB	0.0469	0.1562	0.0937	0.203	0.031	0.003
-CA	0.0550	0.1875	0.0781	0.234	0.023	0.003
-CB	0.0550	0.1875	0.1094	0.234	0.031	0.003
-DA	0.0781	0.2500	0.0937	0.296	0.023	0.003
-DB	0.0781	0.2500	0.1406	0.296	0.031	0.003
-EA	0.0937	0.1875	0.0625	0.234	0.018	0.003
-EB	0.0937	0.1875	0.0937	0.234	0.031	0.003
-EC	0.0937	0.3125	0.1094	0.359	0.023	0.003
-ED	0.0937	0.3125	0.1406	0.359	0.031	0.003
-FA	0.1250	0.2500	0.0937	0.296	0.023	0.003
-FB	0.1250	0.2500	0.1094	0.296	0.031	0.003
-FC	0.1250	0.3125	0.1094	0.359	0.023	0.003
-FD	0.1250	0.3125	0.1406	0.359	0.031	0.003
-FE	0.1250	0.3750	0.1094	0.422	0.023	0.005
-FF	0.1250	0.3750	0.1406	0.422	0.031	0.005
-FG	0.1250	0.3750	0.1562	0.440	0.030	0.012
-GA	0.1562	0.3125	0.1094	0.359	0.023	0.003
-GB	0.1562	0.3125	0.1250	0.359	0.036	0.003
-HA	0.1875	0.3750	0.1250	0.422	0.023	0.003
-HB	0.1875	0.3750	0.1250	0.422	0.031	0.003
-HC	0.1875	0.5000	0.1562	0.565	0.042	0.012
-HD	0.1875	0.5000	0.1960	0.565	0.042	0.012
-HE	0.1875	0.3125	0.1094	0.359	0.023	0.003
-HF	0.1875	0.3125	0.1250	0.359	0.036	0.003
-JA	0.2500	0.3750	0.1250	0.422	0.023	0.003
-JB	0.2500	0.3750	0.1250	0.422	0.036	0.003
-JC	0.2500	0.5000	0.1250	0.547	0.023	0.005
-JD	0.2500	0.5000	0.1875	0.547	0.045	0.005
-JE	0.2500	0.6250	0.1960	0.690	0.042	0.012
-KA	0.3125	0.5000	0.1562	0.547	0.031	0.005
-LA	0.3750	0.8750	0.2188	0.969	0.062	0.016
-LB	0.3750	0.8750	0.2812	0.969	0.062	0.016
-MA	0.5000	1.1250	0.2500	1.225	0.062	0.016
-MB	0.5000	1.1250	0.3125	1.225	0.062	0.016

[A] Maximum shaft or housing fillet radius that bearing corners will clear.

TABLE A6.2 Retainer

PN Des	Type
0	no retainer, full complement
1	manufacturer's standard[A]
2	crown[B]
3	ribbon, tight clinched[B]
4	ribbon, loose clinched[C]
5	PTFE tube separator[D]
7	phenolic laminate[E,F]
8	vacuum-impregnated phenolic[F,G]
9	nonporous, nonmetallic crown[F]

[A] One-piece pressed corrosion-resistant steel crown or two-piece pressed corrosion-resistant steel ribbon.
[B] One-piece pressed corrosion-resistant steel.
[C] Two-piece pressed corrosion-resistant steel.
[D] PTFE (polytetrafluoroethylene).
[E] Phenolic or other porous nonmetallic material.
[F] Used for high-speed applications.
[G] Phenolic or other porous nonmetallic material saturated with lubricant. Selection of this choice dictates choosing manufacturer's standard amount of lubricant.

TABLE A6.3 Closures

PN Des	Number	Type	Locations
N	none	none	
A	one	shield[A]	normal[B]
B	one	shield[A]	opposite[C]
C	two	shield[A]	
D	one	seal[D]	normal[B]
E	one	seal[E]	normal[B]
F	one	seal[D]	opposite[C]
G	one	seal[E]	opposite[C]
H	two	seal[D]	
J	two	seal[E]	

[A] Corrosion-resistant steel conforming to Specification A580/A580M, Condition A; Specification A240/A240M; Specification A756; or Specification A666 (for shield) and Specification A313/A313M, Type 302, Class 1, or SAE-AMS 5688 for snap rings.
[B] On flange side.
[C] On side opposite flange.
[D] Synthetic rubber.
[E] Glass fiber (polytetrafluoroethylene) or other inert fiber.

TABLE A6.4 Radial Internal Clearance

PN Des	Range, in.
1	0.0001 to 0.0003
2	0.0003 to 0.0005
5	0.0005 to 0.0008
8	0.0008 to 0.0011
9	As specified in contract

TABLE A6.5 Calibration of Bore and Outside Diameter (OD)

PN Des	Bore Increments	OD Increments
N	no calibration	no calibration
A	no calibration	0.00010
B	no calibration	0.00005
C	0.00010	no calibration
D	0.00010	0.00010
E	0.00010	0.00005
F	0.00005	no calibration
G	0.00005	0.00010
H	0.00005	0.00005

Documents
Document Sharing Hub
Full document details: ASTM F2332-06(2022)

TABLE A6.6 Performance Test

PN Des	Type
1	manufacturer's standard
2	starting torque[A]

[A] Starting torque limits from Table 2 of base document.

TABLE A6.7 Lubricant

PN Des	Specification
P	preservative[A]
A	MIL-PRF-6085
B	MIL-PRF-6085[B]
C	DOD-L-81846
D	DOD-L-81846[B]
E	MIL-PRF-23827
F	MIL-PRF-81322
G	MIL-G-81937
H	MIL-PRF-83261
J	MIL-S-81087[C]
K	MIL-S-81087[C]
L	MIL-DTL-53131, Grade 4
M	MIL-DTL-53131, Grade 6
N	MIL-DTL-53131, Grade 9
Q	MIL-DTL-53131, Grade 14
R	MIL-DTL-53131, Grade 40
S	As specified in contract

[A] PN Des "P" shall be used only with PN Des "P" in Table A6.8.
[B] With barrier coat.
[C] Canceled – lube no longer manufactured.

TABLE A6.8 Lubricant Amount

PN Des	Quantity
P	preservative amount as required by MIL-DTL-197
1	manufacturer's standard[A]
2	oil per Table 5 of base document
3	15 % grease
4	25 % grease
5	35 % grease
6	45 % grease
7	As specified in contract

[A] Grease: fill to minimum 25 %, maximum 40 % of bearing void. Oil: immerse and then allow excess to drip off. The standard quantity of oil varies with each bearing size.

Documents
Document Sharing Hub
Full document details: ASTM F2332-06(2022)

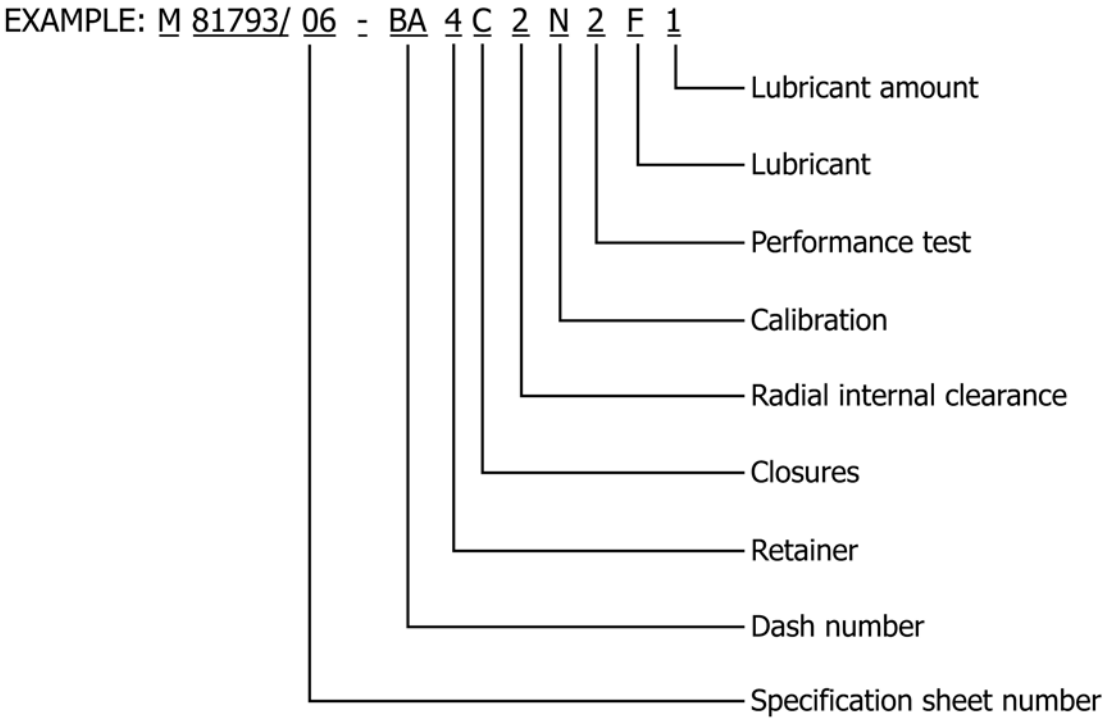

M81793/06-BA4C2N2F1 indicates - Bore 0.0469 in.; outside diameter 0.1562 in.; width 0.0625 in.; flange OD 0.203 in.; flange width 0.013 in.; radius 0.003 in.; retainer, ribbon, loose clinched; closures, 2 shields; radial internal clearance, 0.0003 in.; to 0.0005 in.; no calibration; performance test, starting torque; lubricant, MIL-PRF-81322; lubricant amount, manufacturer's standard.

FIG. A6.2 Part Number

Documents
Document Sharing Hub
Full document details: ASTM F2332-06(2022)

A7. ANNULAR BALL BEARINGS FOR INSTRUMENTS AND PRECISION ROTATING COMPONENTS, DEEP GROOVE, FLANGED, CORROSION-RESISTANT STEEL, ABEC 5P

A7.1 Requirements

A7.1.1 *Design*—All bearings described in this specification sheet shall be deep groove instrument bearings, flanged.

A7.1.2 *Material*—The ball and ring material for these bearings shall be corrosion-resistant steel 440C (UNS S44004) conforming to SAE-AMS-QQ-S-763.

A7.1.3 *Tolerance Class*— The tolerance class shall be in accordance with the ABEC 5P tolerance tables of ABMA Standard 12.2. This tolerance class shall apply to all bearing sizes listed in Table A7.1.

A7.1.4 *Boundary Dimensions*—The boundary dimensions shall be as specified by the dash number (Dash No.) in Table A7.1.

A7.1.5 *Retainer*—The retainer shall be as specified by the part number designator (PN Des) in Table A7.2.

A7.1.6 *Closures*—The closures shall be as specified by the part number designator in Table A7.3.

A7.1.7 *Radial Internal Clearance* —The radial internal clearance shall be as specified by the part number designator in Table A7.4.

A7.1.8 *Calibration*— The calibration shall be as specified by the part number designator in Table A7.5.

A7.1.9 *Performance Test*—The performance test shall be as specified by the part number designator in Table A7.6.

A7.1.10 *Lubrication:*

A7.1.10.1 *Lubricant*—The lubricant shall be in accordance with the specification specified by the part number designator in Table A7.7.

A7.1.10.2 *Lubricant Amount*—The amount of lubricant shall be as specified by the part number designator in Table A7.8.

A7.1.10.3 *Barrier Coating*— The barrier coating shall be applied to bearings as specified by the part number designator in Table A7.7.

A7.1.11 *Part Number*— The part number consists of the following: prefix letter M; general specification number; number of this specification sheet; dash number; and characters for: retainer, closures, radial internal clearance, calibration, performance test, lubricant, and lubricant amount (see Fig. A7.2).

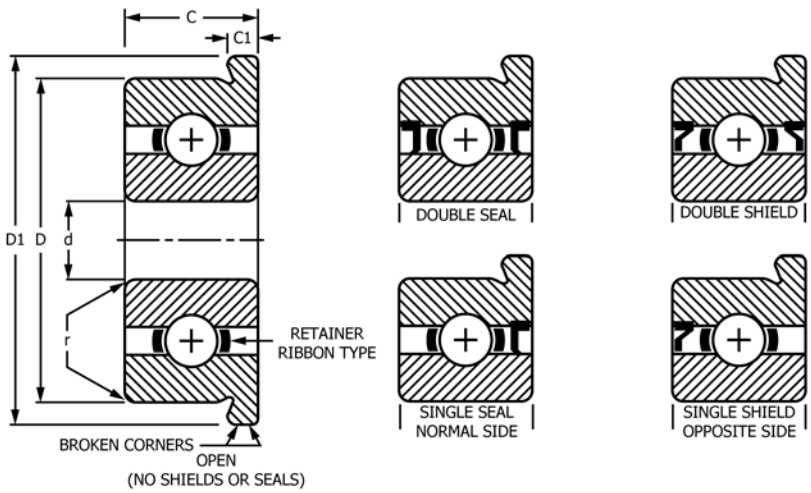

FIG. A7.1 Bearing Configuration

Documents
Document Sharing Hub
Full document details: ASTM F2332-06(2022)

TABLE A7.1 Boundary Dimensions, inches

Dash No.	Bore *d*	OD *D*	Width *C*	Flange OD D_1	Flange Width C_1	Radius *r*[A]
-AA	0.0400	0.1250	0.0469	0.171	0.013	0.003
-BA	0.0469	0.1562	0.0625	0.203	0.013	0.003
-BB	0.0469	0.1562	0.0937	0.203	0.031	0.003
-CA	0.0550	0.1875	0.0781	0.234	0.023	0.003
-CB	0.0550	0.1875	0.1094	0.234	0.031	0.003
-DA	0.0781	0.2500	0.0937	0.296	0.023	0.003
-DB	0.0781	0.2500	0.1406	0.296	0.031	0.003
-EA	0.0937	0.1875	0.0625	0.234	0.018	0.003
-EB	0.0937	0.1875	0.0937	0.234	0.031	0.003
-EC	0.0937	0.3125	0.1094	0.359	0.023	0.003
-ED	0.0937	0.3125	0.1406	0.359	0.031	0.003
-FA	0.1250	0.2500	0.0937	0.296	0.023	0.003
-FB	0.1250	0.2500	0.1094	0.296	0.031	0.003
-FC	0.1250	0.3125	0.1094	0.359	0.023	0.003
-FD	0.1250	0.3125	0.1406	0.359	0.031	0.003
-FE	0.1250	0.3750	0.1094	0.422	0.023	0.005
-FF	0.1250	0.3750	0.1406	0.422	0.031	0.005
-FG	0.1250	0.3750	0.1562	0.440	0.030	0.012
-GA	0.1562	0.3125	0.1094	0.359	0.023	0.003
-GB	0.1562	0.3125	0.1250	0.359	0.036	0.003
-HA	0.1875	0.3750	0.1250	0.422	0.023	0.003
-HB	0.1875	0.3750	0.1250	0.422	0.031	0.003
-HC	0.1875	0.5000	0.1562	0.565	0.042	0.012
-HD	0.1875	0.5000	0.1960	0.565	0.042	0.012
-HE	0.1875	0.3125	0.1094	0.359	0.023	0.003
-HF	0.1875	0.3125	0.1250	0.359	0.036	0.003
-JA	0.2500	0.3750	0.1250	0.422	0.023	0.003
-JB	0.2500	0.3750	0.1250	0.422	0.036	0.003
-JC	0.2500	0.5000	0.1250	0.547	0.023	0.005
-JD	0.2500	0.5000	0.1875	0.547	0.045	0.005
-JE	0.2500	0.6250	0.1960	0.690	0.042	0.012
-KA	0.3125	0.5000	0.1562	0.547	0.031	0.005
-LA	0.3750	0.8750	0.2188	0.969	0.062	0.016
-LB	0.3750	0.8750	0.2812	0.969	0.062	0.016
-MA	0.5000	1.1250	0.2500	1.225	0.062	0.016
-MB	0.5000	1.1250	0.3125	1.225	0.062	0.016

[A] Maximum shaft or housing fillet radius that bearing corners will clear.

TABLE A7.2 Retainer

PN Des	Type
0	no retainer, full complement
1	manufacturer's standard[A]
2	crown[B]
3	ribbon, tight-clinched[B]
4	ribbon, loose-clinched[C]
5	PTFE tube separator[D]
7	phenolic laminate[E,F]
8	vacuum-impregnated phenolic[F,G]
9	nonporous, nonmetallic crown[F]

[A] One-piece pressed corrosion-resistant steel crown or two-piece pressed corrosion-resistant steel ribbon.
[B] One-piece pressed corrosion-resistant steel.
[C] Two-piece pressed corrosion-resistant steel.
[D] PTFE (polytetrafluoroethylene).
[E] Phenolic or other porous nonmetallic material.
[F] Used for high-speed applications.
[G] Phenolic or other porous nonmetallic material saturated with lubricant. Selection of this choice dictates choosing manufacturer's standard amount of lubricant.

TABLE A7.3 Closures

PN Des	Number	Type	Locations
N	none	none	
A	one	shield[A]	normal[B]
B	one	shield[A]	opposite[C]
C	two	shield[A]	
D	one	seal[D]	normal[B]
E	one	seal[E]	normal[B]
F	one	seal[D]	opposite[C]
G	one	seal[E]	opposite[C]
H	two	seal[D]	
J	two	seal[E]	

[A] Corrosion-resistant steel conforming to Specification A580/A580M, Condition A; Specification A240/A240M; Specification A756; or Specification A666 (for shield) and Specification A313/A313M, Type 302, Class 1, or SAE-AMS 5688 for snap rings.
[B] On flange side.
[C] On side opposite flange.
[D] Synthetic rubber.
[E] Glass fiber (polytetrafluoroethylene) or other inert fiber.

TABLE A7.4 Radial Internal Clearance

PN Des	Range, in.
1	0.0001 to 0.0003
2	0.0003 to 0.0005
5	0.0005 to 0.0008
8	0.0008 to 0.0011
9	As specified in contract

TABLE A7.5 Calibration of Bore and Outside Diameter (OD)

PN Des	Bore Increments	OD Increments
N	no calibration	no calibration
A	no calibration	0.00010
B	no calibration	0.00005
C	0.00010	no calibration
D	0.00010	0.00010
E	0.00010	0.00005
F	0.00005	no calibration
G	0.00005	0.00010
H	0.00005	0.00005

AVA Documents
Document Sharing Hub

Full document details: ASTM F2332-06(2022)

TABLE A7.6 Performance Test

PN Des	Type
1	manufacturer's standard
2	starting torque[A]

[A] Starting torque limits from Table 2 of base document.

TABLE A7.7 Lubricant

PN Des	Specification
P	preservative[A]
A	MIL-PRF-6085
B	MIL-PRF-6085[B]
C	DOD-L-81846
D	DOD-L-81846[B]
E	MIL-PRF-23827
F	MIL-PRF-81322
G	MIL-G-81937
H	MIL-PRF-83261
J	MIL-S-81087[C]
K	MIL-S-81087[C]
L	MIL-DTL-53131, Grade 4
M	MIL-DTL-53131, Grade 6
N	MIL-DTL-53131, Grade 9
Q	MIL-DTL-53131, Grade 14
R	MIL-DTL-53131, Grade 40
S	As specified in contract

[A] PN Des "P" shall be used only with PN Des "P" in Table A7.8.
[B] With barrier coat.
[C] Canceled – lube no longer manufactured.

TABLE A7.8 Lubricant Amount

PN Des	Quantity
P	preservative amount as required by MIL-DTL-197
1	manufacturer's standard[A]
2	oil per Table 5 of base document
3	15 % grease
4	25 % grease
5	35 % grease
6	45 % grease
7	As specified in contract

[A] Grease: fill to minimum 25 %, maximum 40 % of bearing void. Oil: immerse and then allow excess to drip off. The standard quantity of oil varies with each bearing size.

Documents
Document Sharing Hub
Full document details: ASTM F2332-06(2022)

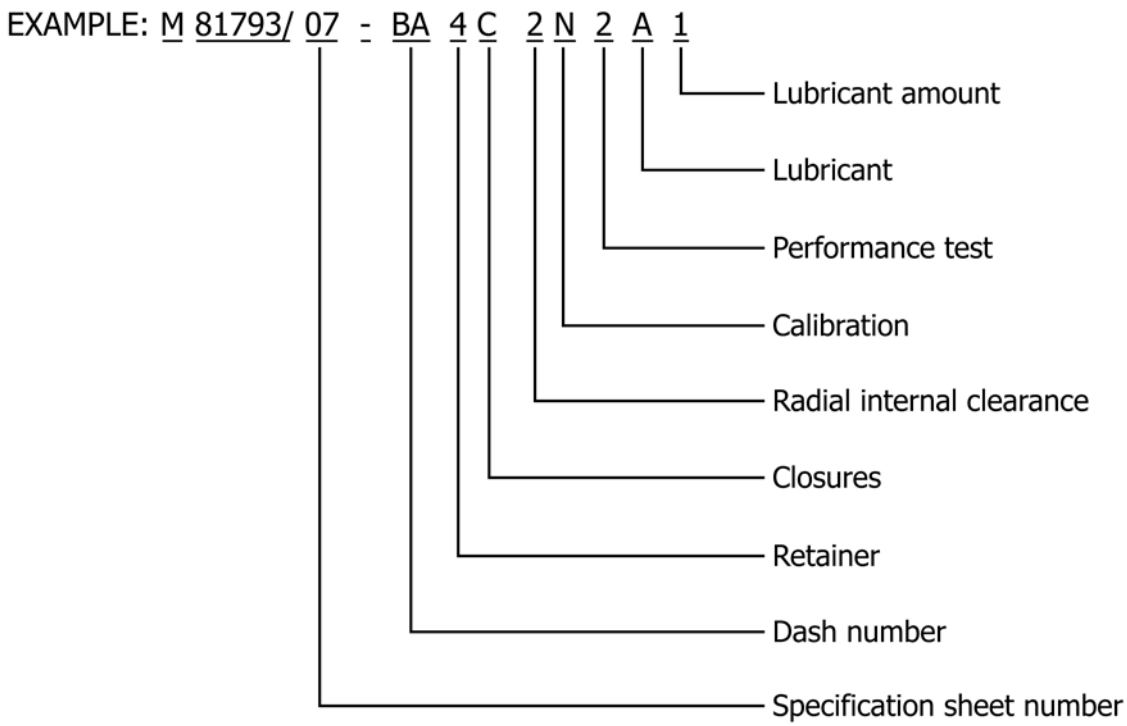

M81793/07-BA4C2N2A1 indicates - Bore 0.0469 in.; outside diameter 0.1562 in.; width 0.0625 in.; flange OD 0.203 in.; flange width 0.013 in.; radius 0.003 in.; retainer, ribbon, loose clinched; closures, 2 shields; radial internal clearance, 0.0003 in.; to 0.0005 in.; no calibration; performance test, starting torque; lubricant, MIL-PRF-6085; lubricant amount, manufacturer's standard.

FIG. A7.2 Part Number

Documents
Document Sharing Hub
Full document details: ASTM F2332-06(2022)

A8. ANNULAR BALL BEARINGS FOR INSTRUMENTS AND PRECISION ROTATING COMPONENTS, DEEP GROOVE, FLANGED, CORROSION-RESISTANT STEEL, ABEC 7P

A8.1 Requirements

A8.1.1 *Design*—All bearings described in this specification sheet shall be deep groove instrument bearings, flanged.

A8.1.2 *Material*—The ball and ring material for these bearings shall be corrosion-resistant steel 440C (UNS S44004) conforming to SAE-AMS-QQ-S-763.

A8.1.3 *Tolerance Class*— The tolerance class shall be in accordance with the ABEC 7P tolerance tables of ABMA Standard 12.2. This tolerance class shall apply to all bearing sizes listed in Table A8.1.

A8.1.4 *Boundary Dimensions*—The boundary dimensions shall be as specified by the dash number (Dash No.) in Table A8.1.

A8.1.5 *Retainer*—The retainer shall be as specified by the part number designator (PN Des) in Table A8.2.

A8.1.6 *Closures*—The closures shall be as specified by the part number designator in Table A8.3.

A8.1.7 *Radial Internal Clearance* —The radial internal clearance shall be as specified by the part number designator in Table A8.4.

A8.1.8 *Calibration*— The calibration shall be as specified by the part number designator in Table A8.5.

A8.1.9 *Performance Test*—The performance test shall be as specified by the part number designator in Table A8.6.

A8.1.10 *Lubrication:*

A8.1.10.1 *Lubricant*—The lubricant shall be in accordance with the specification specified by the part number designator in Table A8.7.

A8.1.10.2 *Lubricant Amount*—The amount of lubricant shall be as specified by the part number designator in Table A8.8.

A8.1.10.3 *Barrier Coating*— The barrier coating shall be applied to bearings as specified by the part number designator in Table A8.7.

A8.1.11 *Part Number*— The part number consists of the following: prefix letter M; general specification number; number of this specification sheet; dash number; and characters for: retainer, closures, radial internal clearance, calibration, performance test, lubricant, and lubricant amount (see Fig. A8.2).

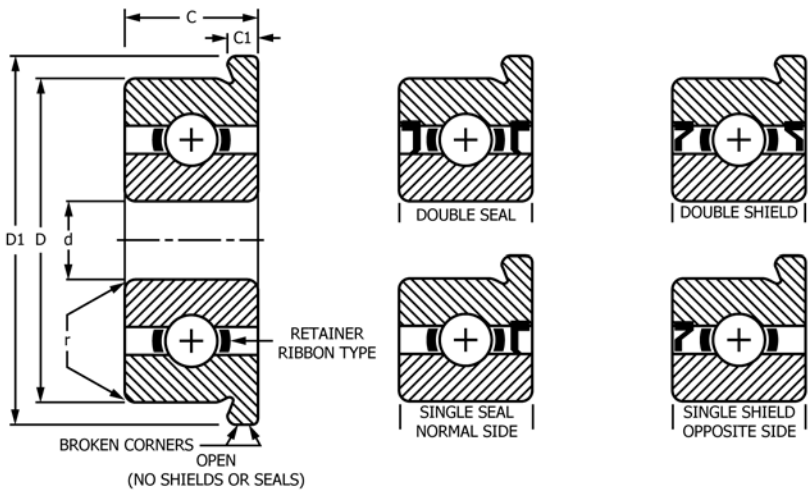

FIG. A8.1 Bearing Configuration

Documents
Document Sharing Hub
Full document details: ASTM F2332-06(2022)

TABLE A8.1 Boundary Dimensions, inches

Dash No.	Bore d	OD D	Width C	Flange OD D_1	Flange Width C_1	Radius r^A
-AA	0.0400	0.1250	0.0469	0.171	0.013	0.003
-BA	0.0469	0.1562	0.0625	0.203	0.013	0.003
-BB	0.0469	0.1562	0.0937	0.203	0.031	0.003
-CA	0.0550	0.1875	0.0781	0.234	0.023	0.003
-CB	0.0550	0.1875	0.1094	0.234	0.031	0.003
-DA	0.0781	0.2500	0.0937	0.296	0.023	0.003
-DB	0.0781	0.2500	0.1406	0.296	0.031	0.003
-EA	0.0937	0.1875	0.0625	0.234	0.018	0.003
-EB	0.0937	0.1875	0.0937	0.234	0.031	0.003
-EC	0.0937	0.3125	0.1094	0.359	0.023	0.003
-ED	0.0937	0.3125	0.1406	0.359	0.031	0.003
-FA	0.1250	0.2500	0.0937	0.296	0.023	0.003
-FB	0.1250	0.2500	0.1094	0.296	0.031	0.003
-FC	0.1250	0.3125	0.1094	0.359	0.023	0.003
-FD	0.1250	0.3125	0.1406	0.359	0.031	0.003
-FE	0.1250	0.3750	0.1094	0.422	0.023	0.005
-FF	0.1250	0.3750	0.1406	0.422	0.031	0.005
-FG	0.1250	0.3750	0.1562	0.440	0.030	0.012
-GA	0.1562	0.3125	0.1094	0.359	0.023	0.003
-GB	0.1562	0.3125	0.1250	0.359	0.036	0.003
-HA	0.1875	0.3750	0.1250	0.422	0.023	0.003
-HB	0.1875	0.3750	0.1250	0.422	0.031	0.003
-HC	0.1875	0.5000	0.1562	0.565	0.042	0.012
-HD	0.1875	0.5000	0.1960	0.565	0.042	0.012
-HE	0.1875	0.3125	0.1094	0.359	0.023	0.003
-HF	0.1875	0.3125	0.1250	0.359	0.036	0.003
-JA	0.2500	0.3750	0.1250	0.422	0.023	0.003
-JB	0.2500	0.3750	0.1250	0.422	0.036	0.003
-JC	0.2500	0.5000	0.1250	0.547	0.023	0.005
-JD	0.2500	0.5000	0.1875	0.547	0.045	0.005
-JE	0.2500	0.6250	0.1960	0.690	0.042	0.012
-KA	0.3125	0.5000	0.1562	0.547	0.031	0.005
-LA	0.3750	0.8750	0.2188	0.969	0.062	0.016
-LB	0.3750	0.8750	0.2812	0.969	0.062	0.016
-MA	0.5000	1.1250	0.2500	1.225	0.062	0.016
-MB	0.5000	1.1250	0.3125	1.225	0.062	0.016

[A] Maximum shaft or housing fillet radius that bearing corners will clear.

TABLE A8.2 Retainer

PN Des	Type
0	no retainer, full complement
1	manufacturer's standard[A]
2	ccrown[B]
3	ribbon, tight-clinched[B]
4	ribbon, loose-clinched[C]
5	PTFE tube separator[D]
6	not applicable
7	phenolic laminate[E,F]
8	vacuum-impregnated phenolic[F,G]
9	nonporous, nonmetallic crown[F]

[A] One-piece pressed corrosion-resistant steel crown or two-piece pressed corrosion-resistant steel ribbon.
[B] One-piece pressed corrosion-resistant steel.
[C] Two-piece pressed corrosion-resistant steel.
[D] PTFE (polytetrafluoroethylene).
[E] Phenolic or other porous nonmetallic material.
[F] Used for high-speed applications.
[G] Phenolic or other porous nonmetallic material saturated with lubricant. Selection of this choice dictates choosing manufacturer's standard amount of lubricant.

TABLE A8.3 Closures

PN Des	Number	Type	Locations
N	none	none	
A	one	shield[A]	normal[B]
B	one	shield[A]	opposite[C]
C	two	shield[A]	
D	one	seal[D]	normal[B]
E	one	seal[E]	normal[B]
F	one	seal[D]	opposite[C]
G	one	seal[E]	opposite[C]
H	two	seal[D]	
J	two	seal[E]	

[A] Corrosion-resistant steel conforming to Specification A580/A580M, Condition A; Specification A240/A240M; Specification A756; or Specification A666 (for shield) and Specification A313/A313M, Type 302, Class 1, or SAE-AMS 5688 for snap rings.
[B] On flange side.
[C] On side opposite flange.
[D] Synthetic rubber.
[E] Glass fiber (polytetrafluoroethylene) or other inert fiber.

TABLE A8.4 Radial Internal Clearance

PN Des	Range, in.
1	0.0001 to 0.0003
2	0.0003 to 0.0005
5	0.0005 to 0.0008
8	0.0008 to 0.0011
9	As specified in contract

TABLE A8.5 Calibration of Bore and Outside Diameter (OD)

PN Des	Bore Increments	OD Increments
N	no calibration	no calibration
A	no calibration	0.00010
B	no calibration	0.00005
C	0.00010	no calibration
D	0.00010	0.00010
E	0.00010	0.00005
F	0.00005	no calibration
G	0.00005	0.00010
H	0.00005	0.00005

Documents
Document Sharing Hub
Full document details: ASTM F2332-06(2022)

TABLE A8.6 Performance Test

PN Des	Type
1	manufacturer's standard
2	starting torque[A]

[A] Starting torque limits from Table 2 of base document.

TABLE A8.7 Lubricant

PN Des	Specification
P	preservative[A]
A	MIL-PRF-6085
B	MIL-PRF-6085[B]
C	DOD-L-81846
D	DOD-L-81846[B]
E	MIL-PRF-23827
F	MIL-PRF-81322
G	MIL-G-81937
H	MIL-PRF-83261
J	MIL-S-81087[C]
K	MIL-S-81087[C]
L	MIL-DTL-53131, Grade 4
M	MIL-DTL-53131, Grade 6
N	MIL-DTL-53131, Grade 9
Q	MIL-DTL-53131, Grade 14
R	MIL-DTL-53131, Grade 40
S	As specified in contract

[A] PN Des "P" shall be used only with PN Des "P" in Table A8.8.
[B] With barrier coat.
[C] Canceled – lube no longer manufactured.

TABLE A8.8 Lubricant Amount

PN Des	Quantity
P	preservative amount as required by MIL-DTL-197
1	manufacturer's standard[A]
2	oil per Table 5 of base document
3	15 % grease
4	25 % grease
5	35 % grease
6	45 % grease
7	As specified in contract

[A] Grease: fill to minimum 25 %, maximum 40 % of bearing void. Oil: immerse and then allow excess to drip off. The standard quantity of oil varies with each bearing size.

Documents
Document Sharing Hub
Full document details: ASTM F2332-06(2022)

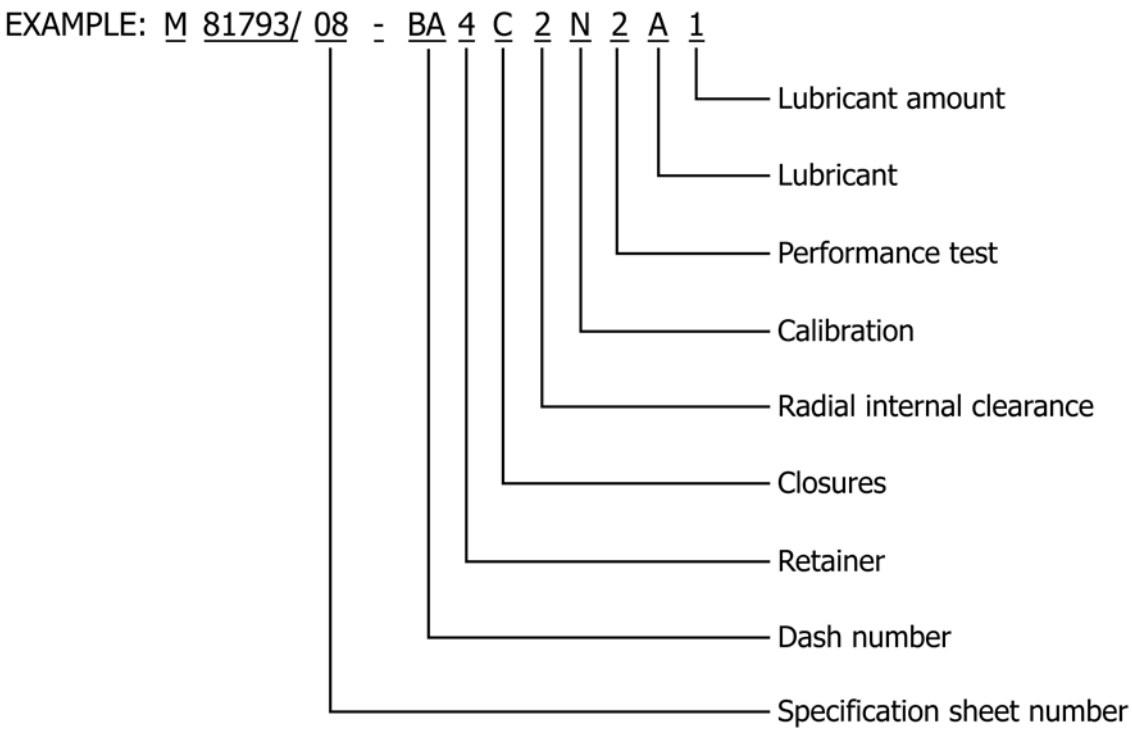

M81793/08-BA4C2N2A1 indicates - Bore 0.0469 in.; outside diameter 0.1562 in.; width 0.0625 in.; flange OD 0.203 in.; flange width 0.013 in.; radius 0.003 in.; retainer, ribbon, loose clinched; closures, 2 shields; radial internal clearance, 0.0003 in. to 0.0005 in.; no calibration; performance test, starting torque; lubricant, MIL-PRF-6085; lubricant amount, manufacturer's standard.

FIG. A8.2 Part Number

Documents
Document Sharing Hub
Full document details: ASTM F2332-06(2022)

A9. ANNULAR BALL BEARINGS FOR INSTRUMENTS AND PRECISION ROTATING COMPONENTS, DEEP GROOVE, UNFLANGED, INNER RING EXTENDED, CHROMIUM ALLOY STEEL, ABEC 5P

A9.1 Requirements

A9.1.1 *Design*—All bearings described in this specification sheet shall be deep groove instrument bearings, unflanged, inner ring extended configuration (see Fig. A9.1).

A9.1.2 *Material*—The ball and ring material for these bearings shall be chromium-alloy steel 52100 (UNS G52986) conforming to SAE-AMS 6444.

A9.1.3 *Tolerance Class*— The tolerance class shall be in accordance with the ABEC 5P tolerance tables of ABMA Standard 12.2. This tolerance class shall apply to all bearing sizes listed in Table A9.1.

A9.1.4 *Boundary Dimensions*—The boundary dimensions shall be as specified by the dash number (Dash No.) in Table A9.1.

A9.1.5 *Retainer*—The retainer shall be as specified by the part number designator (PN Des) in Table A9.2.

A9.1.6 *Closures*—The closures shall be as specified by the part number designator in Table A9.3.

A9.1.7 *Radial Internal Clearance* —The radial internal clearance shall be as specified by the part number designator in Table A9.4.

A9.1.8 *Calibration*— The calibration shall be as specified by the part number designator in Table A9.5.

A9.1.9 *Performance Test*—The performance test shall be as specified by the part number designator in Table A9.6.

A9.1.10 *Lubrication:*

A9.1.10.1 *Lubricant*—The lubricant shall be in accordance with the specification specified by the part number designator in Table A9.7.

A9.1.10.2 *Lubricant Amount*—The amount of lubricant shall be as specified by the part number designator in Table A9.8.

A9.1.10.3 *Barrier Coating*— The barrier coating shall be applied to bearings as specified by the part number designator in Table A9.7.

A9.1.11 *Part Number*— The part number consists of the following: prefix letter M; general specification number; number of this specification sheet; dash number; and characters for: retainer, closures, radial internal clearance, calibration, performance test, lubricant, and lubricant amount (see Fig. A9.2).

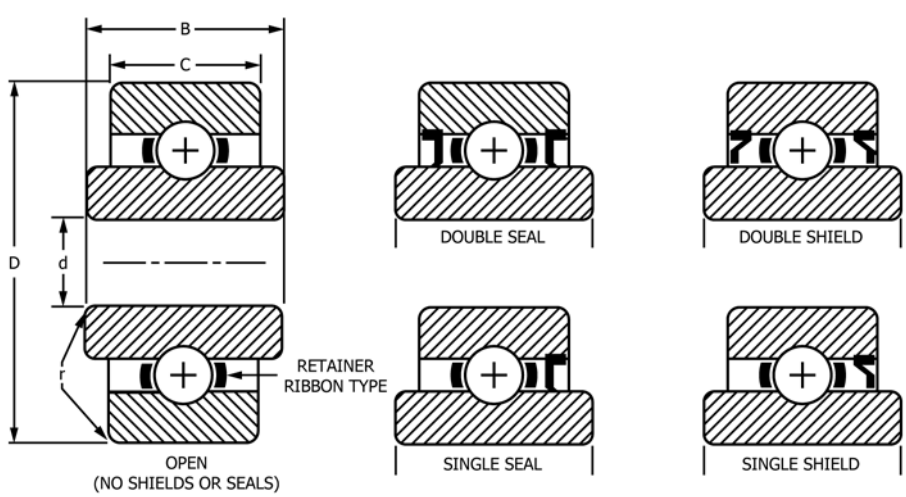

FIG. A9.1 Bearing Configuration

Documents
Document Sharing Hub
Full document details: ASTM F2332-06(2022)

TABLE A9.1 Boundary Dimensions, inches

Dash No.	Bore *d*	OD *D*	Outer Ring Width *C*	Inner Ring Width *B*	Radius *r*[A]
-BA	0.0469	0.1562	0.0625	0.0937	0.003
-BB	0.0469	0.1562	0.0937	0.1250	0.003
-CA	0.0550	0.1875	0.0781	0.1094	0.003
-CB	0.0550	0.1875	0.1094	0.1406	0.003
-DA	0.0781	0.2500	0.0937	0.1250	0.003
-DB	0.0781	0.2500	0.1406	0.1719	0.003
-EA	0.0937	0.1875	0.0625	0.0937	0.003
-EB	0.0937	0.1875	0.0937	0.1250	0.003
-EC	0.0937	0.3125	0.1094	0.1406	0.003
-ED	0.0937	0.3125	0.1406	0.1719	0.003
-FA	0.1250	0.2500	0.0937	0.1250	0.003
-FB	0.1250	0.2500	0.1094	0.1406	0.003
-FC	0.1250	0.3125	0.1094	0.1406	0.003
-FD	0.1250	0.3125	0.1406	0.1719	0.003
-FE	0.1250	0.3750	0.1094	0.1406	0.003
-FF	0.1250	0.3750	0.1406	0.1719	0.005
-FG	0.1250	0.3750	0.1562	0.1875	0.012
-GA	0.1562	0.3125	0.1094	0.1406	0.003
-GB	0.1562	0.3125	0.1250	0.1562	0.003
-HA	0.1875	0.3125	0.1094	0.1406	0.003
-HB	0.1875	0.3125	0.1250	0.1562	0.003
-HC	0.1875	0.3750	0.1250	0.1562	0.003
-HD	0.1875	0.5000	0.1562	0.1875	0.012
-HE	0.1875	0.5000	0.1960	0.2272	0.012
-JA	0.2500	0.3750	0.1250	0.1562	0.003
-JB	0.2500	0.5000	0.1250	0.1562	0.005
-JC	0.2500	0.5000	0.1875	0.2188	0.005
-JD	0.2500	0.6250	0.1960	0.2272	0.012
-KA	0.3125	0.5000	0.1562	0.1875	0.003

[A] Maximum shaft or housing fillet radius that bearing corners will clear.

TABLE A9.2 Retainer

PN Des	Type
0	no retainer, full complement
1	manufacturer's standard[A]
2	crown[B]
3	ribbon, tight-clinched
4	ribbon, loose-clinched[C]
5	PTFE tube separator[D]
7	phenolic laminate[E,F]
8	vacuum-impregnated phenolic[F,G]
9	nonporous, nonmetallic crown[F]

[A] One-piece pressed corrosion-resistant steel crown or two-piece pressed corrosion-resistant steel ribbon.
[B] One-piece pressed corrosion-resistant steel.
[C] Two-piece pressed corrosion-resistant steel.
[D] PTFE (polytetrafluoroethylene).
[E] Phenolic or other porous nonmetallic material.
[F] Used for high-speed applications.
[G] Phenolic or other porous nonmetallic material saturated with lubricant. Selection of this choice dictates choosing manufacturer's standard amount of lubricant.

TABLE A9.3 Closures

PN Des	Number	Type
N	none	none
A	one	shield[A]
C	two	shield[A]
D	one	seal[B]
E	one	seal[C]
H	two	seal[B]
J	two	seal[C]

[A] Corrosion-resistant steel conforming to Specification A580/A580M, Condition A; Specification A240/A240M; Specification A756; or Specification A666 (for shield) and Specification A313/A313M, Type 302, Class 1, or SAE-AMS 5688 for snap rings.
[B] Synthetic rubber.
[C] Glass fiber (polytetrafluoroethylene) or other inert fiber.

TABLE A9.4 Radial Internal Clearance

PN Des	Range, in.
1	0.0001 to 0.0003
2	0.0003 to 0.0005
5	0.0005 to 0.0008
8	0.0008 to 0.0011
9	As specified in contract

TABLE A9.5 Calibration of Bore and Outside Diameter (OD)

PN Des	Bore Increments	OD Increments
N	no calibration	no calibration
A	no calibration	0.00010
B	no calibration	0.00005
C	0.00010	no calibration
D	0.00010	0.00010
E	0.00010	0.00005
F	0.00005	no calibration
G	0.00005	0.00010
H	0.00005	0.00005

Documents
Document Sharing Hub
Full document details: ASTM F2332-06(2022)

TABLE A9.6 Performance Test

PN Des	Type
1	manufacturer's standard
2	starting torque[A]

[A] Starting torque limits from Table 2 of base document.

TABLE A9.7 Lubricant

PN Des	Specification
P	preservative[A]
A	MIL-PRF-6085
B	MIL-PRF-6085[B]
C	DOD-L-81846
D	DOD-L-81846[B]
E	MIL-PRF-23827
F	MIL-PRF-81322
G	MIL-G-81937
H	MIL-PRF-83261
J	MIL-S-81087[C]
K	MIL-S-81087[C]
L	MIL-DTL-53131, Grade 4
M	MIL-DTL-53131, Grade 6
N	MIL-DTL-53131, Grade 9
Q	MIL-DTL-53131, Grade 14
R	MIL-DTL-53131, Grade 40
S	As specified in contract

[A] PN Des "P" shall be used only with PN Des "P" in Table A9.8.
[B] With barrier coat.
[C] Canceled – lube no longer manufactured.

TABLE A9.8 Lubricant Amount

PN Des	Quantity
P	preservative amount as required by MIL-DTL-197
1	manufacturer's standard[A]
2	oil per Table 5 of base document
3	15 % grease
4	25 % grease
5	35 % grease
6	45 % grease
7	As specified in contract

[A] Grease: fill to minimum 25 %, maximum 40 % of bearing void. Oil: immerse and then allow excess to drip off. The standard quantity of oil varies with each bearing size.

Documents
Document Sharing Hub
Full document details: ASTM F2332-06(2022)

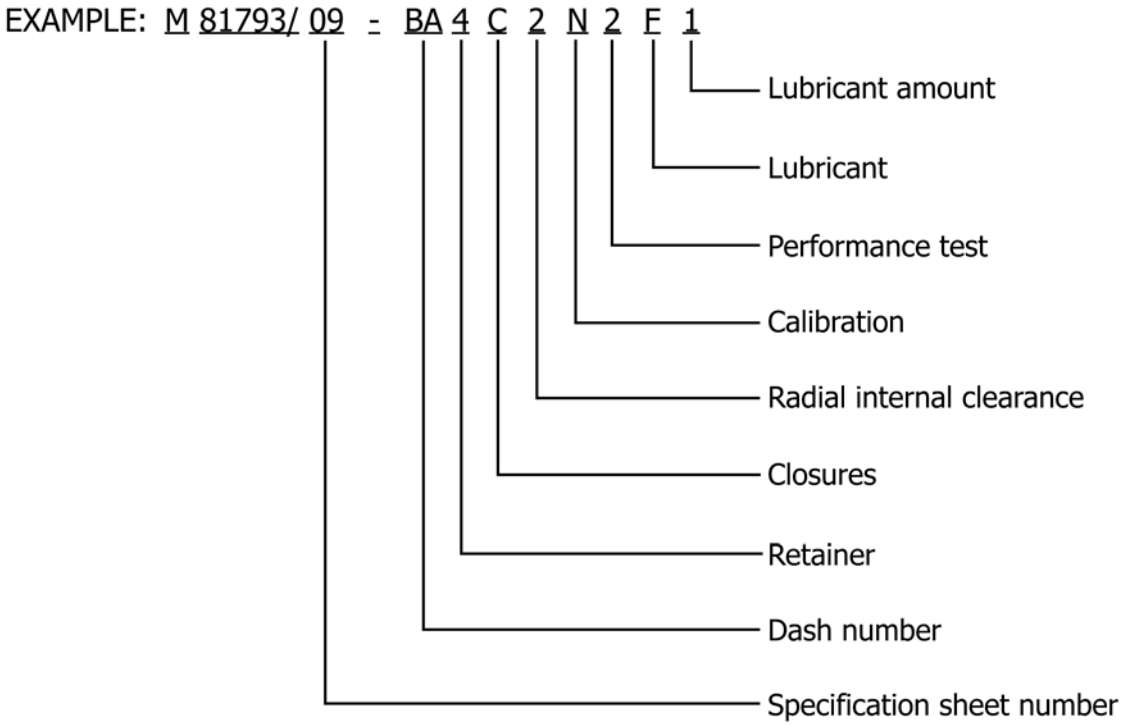

M81793/09-BA4C2N2F1 indicates -

Bore 0.0469 in. outside diameter 0.1562 in.; outer ring width 0.0625 in.; inner ring width 0.09370 in.; radius 0.003 in.; retainer, ribbon, loose clinched; closures, 2 shields; radial internal clearance, 0.0003 in. to 0.0005 in.; no calibration; performance test, starting torque; lubricant, MIL-PRF-81322; lubricant amount, manufacturer's standard.

FIG. A9.2 Part Number

Documents
Document Sharing Hub
Full document details: ASTM F2332-06(2022)

A10. ANNULAR BALL BEARINGS FOR INSTRUMENTS AND PRECISION ROTATING COMPONENTS, DEEP GROOVE, UNFLANGED, INNER RING EXTENDED, CHROMIUM ALLOY STEEL, ABEC 7P

A10.1 Requirements

A10.1.1 *Design*—All bearings described in this specification sheet shall be deep groove instrument bearings, unflanged, inner ring extended configuration (see Fig. A10.1).

A10.1.2 *Material*—The ball and ring material for these bearings shall be chromium-alloy steel 52100 (UNS G52986) conforming to SAE-AMS 6444.

A10.1.3 *Tolerance Class*— The tolerance class shall be in accordance with the ABEC 7P tolerance tables of ABMA Standard 12.2. This tolerance class shall apply to all bearing sizes listed in Table A10.1.

A10.1.4 *Boundary Dimensions*—The boundary dimensions shall be as specified by the dash number (Dash No.) in Table A10.1.

A10.1.5 *Retainer*—The retainer shall be as specified by the part number designator (PN Des) in Table A10.2.

A10.1.6 *Closures*—The closures shall be as specified by the part number designator in Table A10.3.

A10.1.7 *Radial Internal Clearance* —The radial internal clearance shall be as specified by the part number designator in Table A10.4.

A10.1.8 *Calibration*— The calibration shall be as specified by the part number designator in Table A10.5.

A10.1.9 *Performance Test*—The performance test shall be as specified by the part number designator in Table A10.6.

A10.1.10 *Lubrication:*

A10.1.10.1 *Lubricant*—The lubricant shall be in accordance with the specification specified by the part number designator in Table A10.7.

A10.1.10.2 *Lubricant Amount*—The amount of lubricant shall be as specified by the part number designator in Table A10.8.

A10.1.10.3 *Barrier Coating*— The barrier coating shall be applied to bearings as specified by the part number designator in Table A10.7.

A10.1.11 *Part Number*— The part number consists of the following: prefix letter M; general specification number; number of this specification sheet; dash number; and characters for: retainer, closures, radial internal clearance, calibration, performance test, lubricant, and lubricant amount (see Fig. A10.2).

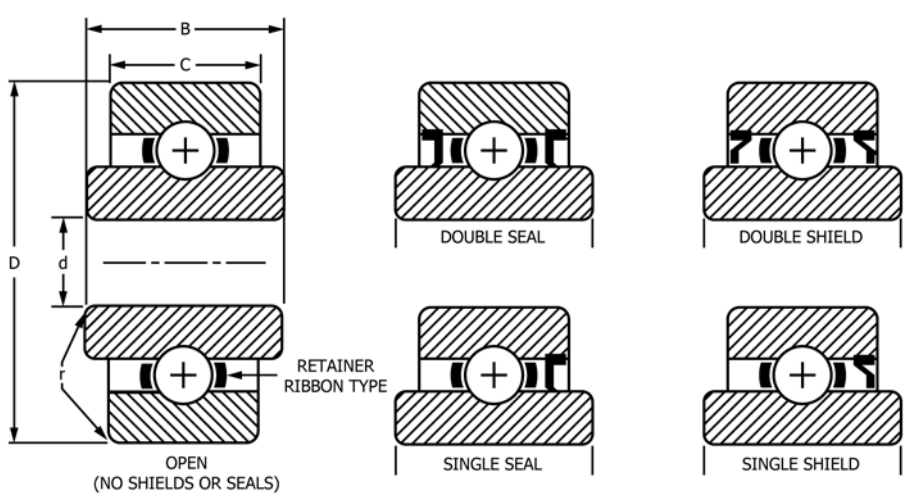

FIG. A10.1 Bearing Configuration

Documents
Document Sharing Hub
Full document details: ASTM F2332-06(2022)