This international standard was developed in accordance with internationally recognized principles on standardization established in the Decision on Principles for the Development of International Standards, Guides and Recommendations issued by the World Trade Organization Technical Barriers to Trade (TBT) Committee.

Designation: F2372 – 15 (Reapproved 2021)

# Standard Consumer Safety Performance Specification for Shopping Carts[1]

This standard is issued under the fixed designation F2372; the number immediately following the designation indicates the year of original adoption or, in the case of revision, the year of last revision. A number in parentheses indicates the year of last reapproval. A superscript epsilon (ε) indicates an editorial change since the last revision or reapproval.

## INTRODUCTION

This consumer safety specification is intended to address injuries to children associated with falls from shopping carts. Based on data from the U.S. Consumer Product Safety Commission (CPSC) National Electronic Injury Surveillance System (NEISS), falls are among the leading causes of head injuries to young children. The most common injury resulted when a child fell or climbed out of a shopping cart because the restraint system was not being used. Falls from shopping carts most often occur when children stand up in the child seat or the cart basket. Falls also occur when children climb on the outside of the cart and cause the cart to tip over. Falls from the child seat occur when the children are not buckled or when they wriggle out of, or unbuckle, the seat restraints. Children can also fall from or with an infant seat, infant carrier, or a car seat placed on the cart seat.

Note—This consumer safety performance specification is not intended to address incidents and injuries resulting from the interaction of other persons with children in shopping carts or incidents resulting from unforeseeable abuse or misuse.

This consumer safety performance specification is written within the current state of the art of shopping cart technology. It is intended that this specification will be updated whenever substantive information becomes available which necessitates additional requirements or justifies the revision of existing requirements.

## 1. Scope

1.1 This consumer safety performance specification covers performance requirements, test methods, and labeling requirements for shopping carts and restraint systems.

1.2 This specification is intended to cover children who are at least six months of age and at least 15 lb (7 kg) up to children who are not more than four years of age and who weigh no more than 35 lb (16 kg).

1.3 This specification does not include any provisions nor is intended for use of infant carriers.

1.4 No shopping cart or restraint system produced after the approval date of this consumer safety performance specification shall, either by label or other means, indicate compliance with this specification unless it conforms to all requirements herein.

1.5 The values stated in inch-pound units are to be regarded as standard. The values given in parentheses are mathematical conversions to SI units that are provided for information only and are not considered standard.

1.6 The following precautionary caveat pertains only to the test method portion, Section 7, of this specification. *This standard does not purport to address all of the safety concerns, if any, associated with its use. It is the responsibility of the user of this standard to establish appropriate safety, health, and environmental practices and determine the applicability of regulatory limitations prior to use.*

1.7 *This international standard was developed in accordance with internationally recognized principles on standardization established in the Decision on Principles for the Development of International Standards, Guides and Recommendations issued by the World Trade Organization Technical Barriers to Trade (TBT) Committee.*

## 2. Referenced Documents

2.1 *ASTM Standards:*[2]

D3359 Test Methods for Rating Adhesion by Tape Test

[1] This specification is under the jurisdiction of ASTM Committee F15 on Consumer Products and is the direct responsibility of Subcommittee F15.56 on Shopping Carts.

Current edition approved Sept. 1, 2021. Published September 2021. Last previous edition approved in 2015 as F2372 – 15. DOI: 10.1520/F2372-15R21.

[2] For referenced ASTM standards, visit the ASTM website, www.astm.org, or contact ASTM Customer Service at service@astm.org. For *Annual Book of ASTM Standards* volume information, refer to the standard's Document Summary page on the ASTM website.

Copyright © ASTM International, 100 Barr Harbor Drive, PO Box C700, West Conshohocken, PA 19428-2959. United States



Documents
Document Sharing Hub
Full document details: ASTM F2372-15(2021)

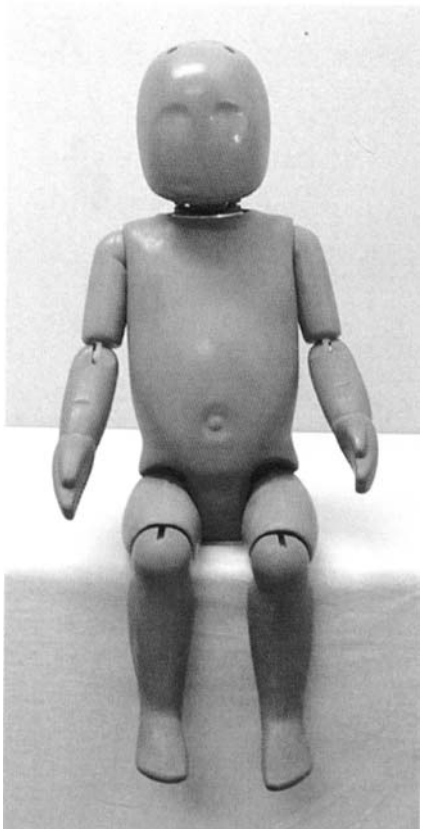

FIG. 1 CRABI 12 Dummy

2.2 *European Standard:*[3]

EN 1929-1:1998 Basket trolleys. Requirements and tests for basket trolleys with or without a child carrying facility

2.3 *Federal Standards:*[4]

16 CFR 1501 Method for Identifying Toys and Other Articles Intended for Use by Children under 3 Years of Age which Present Choking, Aspiration, or Ingestion Hazards because of Small Parts

16 CFR 1700 Poison Prevention Packaging Act[4]

2.4 *Other Document:*

CRABI 12 Dummy 49 CFR 572, subpart R (see Fig. 1)

## 3. Terminology

3.1 *Definitions of Terms Specific to This Standard:*

3.1.1 *child-resistant buckles, n*—buckles, closures, or equivalent that adults can operate, yet exceed the capabilities of a high percentage of children in the occupant age range as stated in 1.2.

3.1.2 *conspicuous, n*—label that is visible, when the unit is in a manufacturer's recommended use position, to a person standing near the unit at any one position around the unit but not necessarily visible from all positions.

3.1.3 *label, n*—any label material (such as plastic or metal) that either will not tear without the aid of tools or tears leaving a sharply defined edge.

3.1.4 *restraint system, n*—apparatus generally used as a means of limiting movement of a child occupant.

3.1.5 *shopping cart, n*—non-motorized, wheeled vehicle generally used for the transport of items by customers while shopping in self-service stores.

3.1.6 *shopping cart stability, n*—the steadfast state of a shopping cart that it will not tip over in the normal use of transporting merchandise and occupant children when seated in a designated seating area.

## 4. Calibration and Standardization

4.1 The unit shall be completely assembled, unless otherwise noted, in accordance with the manufacturer's instructions.

4.2 No testing shall be conducted within 48 h of manufacturing.

4.3 The product to be tested shall be in a room with an ambient temperature of 73 °F ± 9 °F (23 °C ± 5 °C) for at least 1 h before testing. Testing shall then be conducted within this temperature range.

## 5. General Requirements

5.1 *Labeling:*

5.1.1 Warning labels shall be permanent when tested in accordance with 7.5.

5.1.2 Warning statements applied directly onto the surface of the product by hot stamping, heat transfer, printing, silk screening, and so forth shall be permanent when tested in accordance with 7.5.

5.1.3 Labels shall not liberate small parts when tested in accordance with 7.5.3.

## 6. Performance Requirements

6.1 *Rolling Quality*—The cart shall be fitted with at least four wheels, of which at least two shall be able to swivel.

6.2 *Restraining System:*

6.2.1 All shopping carts with a child seating area must have an adjustable child restraint system. The shopping cart's child restraint system and occupant retention capabilities shall include, but not be limited to a mid-torso strap or other adjustable restraining device designed to restrain the child, when tested in accordance with 7.2 and 7.3.

6.2.2 The shopping cart shall have a passive crotch restraint.

6.2.3 The child restraint system shall use child-resistant buckles, closures, or equivalent that adults can operate, yet exceed the capabilities of a high percentage of children in the occupant age range as stated in 1.2 when tested in accordance with 7.4.

6.2.4 The restraint system shall be permanently attached to the shopping cart in such a manner that it will not become detached through normal use. The anchorages for the restraint system shall not separate from their attachment points when tested in accordance with 7.2.

[3] Available from European Committee for Standardization (CEN), Avenue Marnix 17, B-1000, Brussels, Belgium, http://www.cen.eu or British Standards Institution (BSI), 389 Chiswick High Rd., London W4 4AL, U.K., http://www.bsigroup.com.

[4] Available from U.S. Government Printing Office, Superintendent of Documents, 732 N. Capitol St., NW, Washington, DC 20401-0001, http://www.access.gpo.gov.

AVA Documents
Document Sharing Hub



Full document details: ASTM F2372-15(2021)

6.2.5 The restraint system and its closing means (for example, buckle) shall not break, separate, or permit removal of the CRABI 12 test dummy from the child seating compartment when tested in accordance with 7.3.

6.3 *Shopping Cart Stability*—The shopping cart shall not topple over when tested in accordance with 7.6.

## 7. Test Methods

7.1 If during the course of conducting the test methods in this safety specification, a test model suffers any permanent deformation or damage, an additional test model of the same model shall be used for the remainder of the test methods.

7.2 *Restraint System Integrity Test:*

7.2.1 Secure the shopping cart so that it cannot move vertically or horizontally. Secure sections of the folding child seat and gate as needed before testing.

7.2.2 Apply a force of 45 lbf (200 N) to a single attachment point of the restraint system in the normal use direction(s) so that stress would be applied to that attachment. Gradually apply the force within 5 s and maintain for an additional 10 s.

7.2.3 Repeat 7.2.2 for a total of five times with a maximum interval of 5 s between tests.

7.2.4 Repeat 7.2.2 and 7.2.3 for each attachment point of the restraint system.

7.3 *Restraint System Occupant Retention Test:*

7.3.1 Secure the shopping cart so that it cannot move vertically or horizontally. Secure sections of the folding child seat and gate as needed before testing.

7.3.2 Place a CRABI 12 Dummy (see Fig. 1) in the child seat. The Dummy is to be unclothed.

7.3.2.1 Apply and adjust the restraint system to the intended use position to properly restrain the occupant.

7.3.2.2 Adjust the waist restraint using the webbing tension pull device shown in Fig. 2 so that a force of 2 lbf (9 N) applied to the waist restraint will provide at least a ¼-in. (6-mm) space between the waist restraint and the CRABI 12 dummy.

7.3.3 Perform the following tests without readjusting the restraint system:

7.3.3.1 Apply a pull force of 45 lbf (200 N) horizontally on the approximate centerline of either leg of the dummy. Gradually apply the force within 5 s and maintain for an additional 10 s.

7.3.3.2 Repeat 7.3.3.1 four times with a maximum interval of 2 s between tests.

7.3.3.3 Apply a pull force of 45 lbf (200 N) vertically upwards in line with the approximate centerline of the dummy's torso. Gradually apply the force within 5 s and maintain for an additional 10 s.

7.3.3.4 Repeat 7.3.3.3 four times with a maximum interval of 2 s between tests.

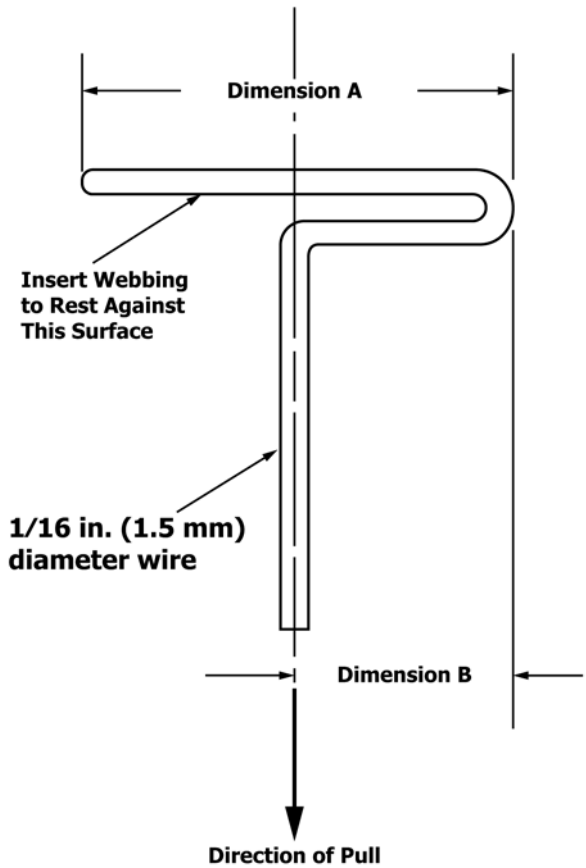


NOTE 1—Dimension A: Width of webbing plus ⅛ in. (3 mm).

NOTE 2—Dimension B: One half of Dimension A.

**FIG. 2 Webbing Tension Pull Device**



Documents
Document Sharing Hub
Full document details: ASTM F2372-15(2021)

7.4 *Child-Resistance Effectiveness and Adult-Use Effectiveness:*

7.4.1 Buckles, closures, or equivalent shall be tested in parallel with 16 CFR 1700.

7.5 *Permanency of Labels and Warnings:*

7.5.1 A label shall be considered permanent if, during an attempt to remove it without the aid of tools or solvents, it cannot be removed or such action damages the surface to which it is attached.

7.5.2 Adhesion test for warnings applied directly onto the surface of the product.

7.5.2.1 Apply the tape test defined in Test Method B—Cross-Cut Tape Test, from Test Methods D3359, eliminating parallel cuts.

7.5.2.2 Perform this test method once in each different location where warnings are applied.

7.5.2.3 The warning statements will be considered permanent if the printing in the area tested is still legible and attached after being subjected to this test.

7.5.3 A label, during an attempt to remove it without the aid of tools or solvents, shall not be removed or shall not fit entirely within the small parts cylinder defined in 16 CFR 1501 if it can be removed.

7.6 *Shopping Cart Stability*—Shopping carts shall be tested in accordance with EN 1929-1:1998, Clause 5.4 for type B Trolleys (shopping carts).

## 8. Marking and Labeling

8.1 Each shopping cart and restraint system and its retail carton, if applicable, shall be marked clearly and legibly to indicate the following:

8.1.1 Name of manufacturer, importer, distributor, or seller.

8.1.2 Model number, stock number, catalog number, item number, type, company trademark/ID, or other symbol expressed numerically, or otherwise, such that only articles of identical construction, change the model number (etc.) whenever a significant structural or design modification is made that effects its conformance with this consumer safety specification.

8.1.3 Code mark or other means that identifies the date (month and year as a minimum) manufactured.

8.2 Each shopping cart shall have warning statements. The warning statements shall be in contrasting color(s), permanent, conspicuous, and sans serif style font.

8.2.1 In warning statements, the safety alert symbol "⚠" and the word "**WARNING**" shall not be less than 0.2 in. (5 mm) high. The remainder of the text shall be characters whose upper case shall be at least 0.1 in. (2.5 mm) high.

8.2.2 The shopping cart shall have the following warning statements and symbols as shown in Fig. 4 as a minimum.

8.2.3 The safety alert symbol and word "**WARNING**" and the signal word panel shall be in contrasting colors or contrast with the background color in the base material.

8.2.4 The message and symbol/pictorial panels shall be in contrasting colors or contrast with the background color in the base material.

8.3 State or local laws may require a special notice be placed on the shopping cart. This notice may appear on the warning label seat flap above or below the warning shown in Fig. 4, or as the example shown in Fig. 5, or be placed at another location on the shopping cart as may be required.

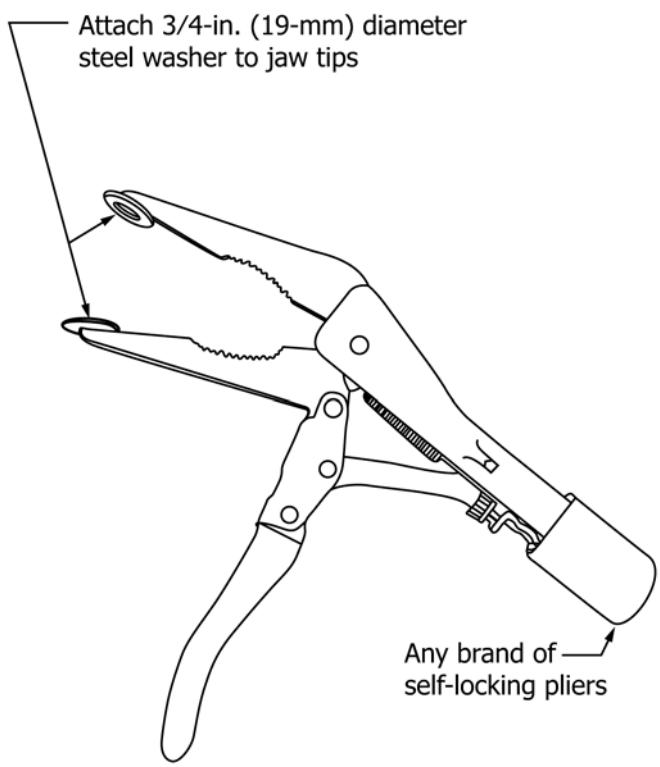


**FIG. 3 Label Permanency Test Clamp**

Documents
Document Sharing Hub



Full document details: ASTM F2372-15(2021)