This international standard was developed in accordance with internationally recognized principles on standardization established in the Decision on Principles for the Development of International Standards, Guides and Recommendations issued by the World Trade Organization Technical Barriers to Trade (TBT) Committee.

Designation: F2729 – 18

Standard Consumer Safety Specification for Constant Air Inflatable Play Devices for Home Use[1]

This standard is issued under the fixed designation F2729; the number immediately following the designation indicates the year of original adoption or, in the case of revision, the year of last revision. A number in parentheses indicates the year of last reapproval. A superscript epsilon (ε) indicates an editorial change since the last revision or reapproval.

1. Scope

1.1 This consumer safety specification establishes performance requirements, test methods, and labeling requirements to promote the safe use of constant air inflatable play devices for private home use. Constant air inflatable play devices for home use that incorporate water play features and do not retain water are not considered as portable pools. Constant air inflatable play devices for home use that incorporate water play features and are intended to hold water for wading or water recreational purposes are applicable to the marking and labeling section of this specification. This specification does not apply to stored air inflatable swimming pools or sealed inflatable devices whether or not they retain water.

1.2 This consumer safety specification provides safety requirements for various types of constant air inflatable play devices for home use intended for children aged from two (2) years through twelve (12) years.

1.3 This consumer safety specification is intended to reduce the risk of death and minimize serious injury to children resulting from use of constant air inflatable play devices for home use.

1.4 No constant air inflatable play devices for home use produced after the approval date of this consumer safety specification shall, either by label or other means, indicate compliance with this specification unless it conforms to all requirements contained herein. The following statement is suggested for use in identifying a product that conforms to all requirements in this specification:

1.4.1 "This product conforms to ASTM F2729, Standard Consumer Safety Specification for Constant Air Inflatable Play Device for Home Use."

1.5 The test values and dimensions stated in SI units are to be regarded as standard. The inch-pound values in parenthesis, when given, are for information only.

1.6 *General Measures, Tolerances, and Conversions:*

1.6.1 The general tolerances for this specification (unless otherwise specified) are as follows:

Dimension Tolerance

$X \pm 12.7$ mm ($X \pm 0.5$ in.)

$X.X \pm 1.27$ mm ($X.X \pm 0.05$ in.)

$X.XX \pm 0.127$ mm ($X.XX \pm 0.005$ in.)

These tolerances still apply to a dimension even when terms like greater than, less than, minimum, or maximum are used.

1.6.2 The values stated in SI units are to be regarded as standard. The values given in parentheses are mathematical conversions to inch-pound units that are provided for information only.

1.6.3 The conversion factor from SI to inch-pound units is 25.4 mm = 1 in., and 0.45359 kg = 1 lb.

1.7 The following precautionary caveat pertains only to the test methods portion of this consumer safety specification: *This standard does not purport to address all of the safety concerns, if any, associated with its use. It is the responsibility of the user of this standard to establish appropriate safety, health, and environmental practices and determine the applicability of regulatory limitations prior to use.*

1.8 *This international standard was developed in accordance with internationally recognized principles on standardization established in the Decision on Principles for the Development of International Standards, Guides and Recommendations issued by the World Trade Organization Technical Barriers to Trade (TBT) Committee.*

2. Referenced Documents

2.1 *ASTM Standards:*[2]

D1683 Test Method for Failure in Sewn Seams of Woven Fabrics

D2240 Test Method for Rubber Property—Durometer Hardness

D5034 Test Method for Breaking Strength and Elongation of Textile Fabrics (Grab Test)

F963 Consumer Safety Specification for Toy Safety

[1] This specification is under the jurisdiction of ASTM Committee F15 on Consumer Products and is the direct responsibility of Subcommittee F15.61 on Constant Air Inflatable Play Devices for Home Use.

Current edition approved Aug. 15, 2018. Published September 2018. Originally approved in 2012. Last previous edition approved in 2012 as F2729 – 12. DOI: 10.1520/F2729-18.

[2] For referenced ASTM standards, visit the ASTM website, www.astm.org, or contact ASTM Customer Service at service@astm.org. For *Annual Book of ASTM Standards* volume information, refer to the standard's Document Summary page on the ASTM website.

Copyright © ASTM International, 100 Barr Harbor Drive, PO Box C700, West Conshohocken, PA 19428-2959. United States

Documents
Document Sharing Hub
Full document details: ASTM F2729-18

2.2 *Federal Regulations:*[3]

16 CFR 1303 Ban of Lead-Containing Paint and Certain Consumer Products Bearing Lead Containing Paint

16 CFR 1500 Federal Hazardous Substances Act regulations, including sections:

1500.44 Method for Determining Extremely Flammable and Flammable Solids

1500.48 Technical Requirements for Determining a Sharp Point in Toys and Other Articles Intended for Use by Children Under 8 Years of Age

1500.49 Technical requirements for Determining a Sharp Metal or Glass Edge in Toys or in Other Articles Intended for Use by Children Under 8 Years of Age

1500.50 Test Methods for Simulating Use and Abuse of Toys and Other Articles Intended for Use by Children

1500.52 Test Methods for Simulating Use and Abuse of Toys and Other Articles Intended for Use Over 18 But Not Over 36 Months of Age

1500.53 Test Methods for Simulating Use and Abuse of Toys and Other Articles Intended for Over 36 But Not Over 96 Months of Age

1500.87 Children's Products Containing Lead: Inaccessible Component Parts

1500.88 Exemptions from Lead Limits Under Section 101 of the Consumer Product Safety Improvement Act for Certain Electronic Devices

1500.91 Determinations Regarding Lead Content for Certain Materials or Products Under Section 101 of the Consumer Product Safety Improvement Act

16 CFR 1501 Method for Identifying Toys and Other Articles Intended for Use by Children Under 3 Years of Age Which Present Choking, Aspiration, or Ingestion Hazards Because of Small Parts

16 CFR 1505 Requirements for Electrically Operated Toys or Other Electrically Operated Articles Intended for Use By Children

2.3 *Other:*

ANSI Z535.4 Product safety signs and labels[4]

Beaufort Wind Force Scale

CPAI 84 A Specification for Flame-Resistant Materials used in Camping Tentage

UL 1450 Standard for Motor-Operated Air Compressors, Vacuum Pumps, and Painting Equipment[5]

3. Terminology

3.1 *Definitions of Terms Specific to This Standard:*

3.1.1 *blower, n*—a powered fan used to inflate the inflatable device.

3.1.2 *blower tube, n*—the part of the inflatable device to which the blower is connected to the inflatable device for the purpose of inflation.

3.1.3 *constant air inflatable play device, n*—a structure relying on a continuous supply of air pressure to maintain its shape, on or in which users play.

3.1.3.1 *Discussion*—This term constant air inflatable play device refers to the simplified term "inflatable device" through out the remainder of the document.

3.1.4 *critical fall height, n*—the upper limit of all free heights of fall, for which the surface provides adequate levels of impact attenuation.

3.1.5 *flaming debris, n*—material that becomes detached from the sample during the test procedure and continues to flame as it falls.

3.1.6 *free height of fall, n*—the greatest distance from the clearly intended body support to the fall zone below.

3.1.7 *grounding, n*—contact with the underlying surface on which the inflatable device sits.

3.1.8 *load bearing components, n*—those components intended to bear the mass of the users. Examples of these include but are not limited to: surfaces intended to be bounced on, slides, steps, ladders, footholds, gripping and grasping devices, climbing devices, transition platforms, containment walls that enclose a surface intended to be bounced on, ramps, tunnels, pools, and anchoring devices.

3.1.9 *molten drips, n*—falling droplets of molten material.

3.1.10 *non-climbable net or mesh, n*—a fabric or synthetic material that is not intended to be climbed.

3.1.11 *non-load bearing components, n*—those components not intended to bear the mass of the users. Examples of these include but are not limited to: decorative items such as flags, areas under bouncing surfaces, air baffles, blower tubes, roof, and un-inflated areas.

3.1.12 *non-rigid, n*—any material having hardness below 70 Shore A scale durometer, as measured by the latest revision of Test Method D2240.

3.1.13 *open side, n*—any external side of an inflatable device with no containment wall.

3.1.14 *platform, n*—any surface on which users stand, sit or traverse.

3.1.15 *playing area, n*—any part or area of the inflatable device that is intended solely for the purpose of taking part in the activity for which the inflatable device is designed.

3.1.16 *ramp, n*—an inclined section aiding the access and egress of users into and out of the playing area.

3.1.17 *rigid, n*—any material having hardness above or equal to 70 Shore A scale durometer, as measured by the latest revision of Test Method D2240.

3.1.18 *run-out section, n*—intended deceleration zone at the bottom of a slide.

3.1.19 *sealed inflatable device, n*—a structure or device on or in which users play that is inflated by means of air and, having achieved the design pressure, is sealed and does not require additional continuous inflation.

[3] Available from U.S. Government Printing Office Superintendent of Documents, 732 N. Capitol St., NW, Mail Stop: SDE, Washington, DC 20401, http://www.access.gpo.gov.

[4] Available from American National Standards Institute (ANSI), 25 W. 43rd St., 4th Floor, New York, NY 10036, http://www.ansi.org.

[5] Available from Underwriters Laboratories (UL), 333 Pfingsten Rd., Northbrook, IL 60062-2096, http://www.ul.com.

AVA Documents
Document Sharing Hub

Full document details: ASTM F2729-18

3.1.20 *toy accessory, n*—an article that provides certain play value separate from, but attached to or sold with, the inflatable device intended for playtime use by a child.

3.1.21 *use zone, n*—an area beneath and immediately adjacent to the inflatable device that is designed for unrestricted circulation around the inflatable device.

4. Calibration and Standardization

4.1 Unless otherwise noted, the inflatable device shall be completely assembled in accordance with the manufacturer's instructions.

4.2 The inflatable device to be tested shall be inflated at an ambient temperature of 23 ± 5°C (73 ± 9°F) for at least one hour prior to testing. Testing shall be conducted within this temperature range.

4.3 All structural testing required by this specification shall be conducted on the same unit.

5. General Requirements

5.1 There shall be no hazardous sharp points or edges as defined in 16 CFR 1500.48 and 16 CFR 1500.49, before or after the inflatable device has been tested to this consumer safety specification.

5.2 There shall be no small parts as defined in 16 CFR 1501 before testing or liberated as a result of testing to this specification for inflatable devices intended for children under 36 months.

5.3 All surface coatings on the inflatable device shall comply with the requirements of 16 CFR 1303 and the Heavy Metals requirements of Consumer Safety Specification F963.

5.4 Accessible component parts (before and after Use-and-Abuse testing described at 16 CFR 1500.50–53 and 16 CFR 1500.87(h)) shall not contain lead or lead compounds in which the lead content (calculated as lead metal [Pb]) is in excess of 100 ppm.

5.5 The constant air inflatable shall be designed to allow natural air circulation and lines of visibility between users and persons supervising when evaluated according to 5.5.1.

5.5.1 The constant air inflatable shall be designed to allow a portion of a cube with the size of 0.057 m^3 (2 ft^3) to be viewed from at least 2 points on a perimeter line placed at a distance of 2.75 m (9 ft) from the perimeter of the constant air inflatable and spaced at a distance of at least 2.75 m (9 ft) from each other, and viewed from a height of 1.5 m (5 ft) above the perimeter line. (See Fig. 1.)

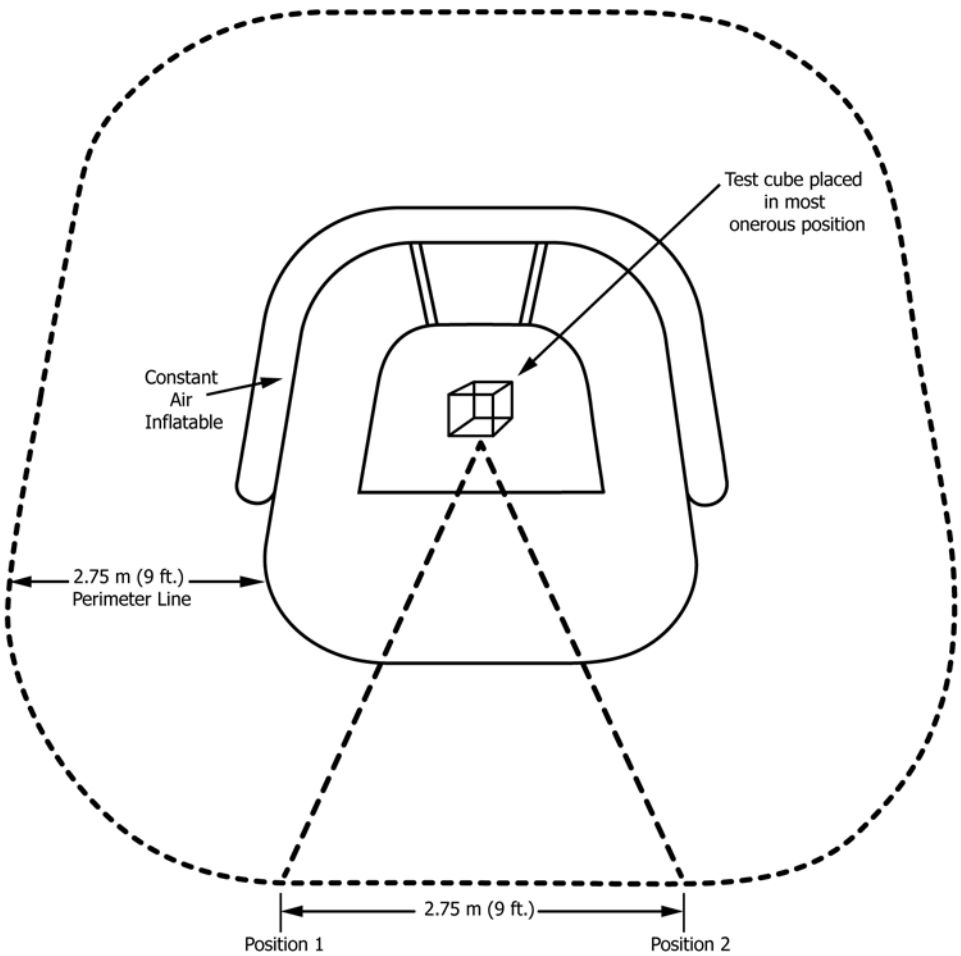

FIG. 1 Lines of Visibility

Documents
Document Sharing Hub
Full document details: ASTM F2729-18

5.6 *Fabric Strength*—Fabrics shall be of adequate tear and tensile strength for the weight of the intended users and have sufficient air retention abilities to enable the inflatable device, when pressurized utilizing the manufacturer's blower, to resume its intended shape after distortion under load. Fabrics used in those areas of the inflatable device that are load-bearing shall have the following as a minimum:

5.6.1 When tested in accordance with Test Method D5034, fabrics shall have a minimum tensile strength of 480 N (108 lb) and a minimum tensile strength of 50 % of its original tensile strength after being subjected to 100 hours of conditioning set forth in CPAI 84, Section 4.2.2.3.

5.6.2 Minimum seam strength of 380 N (85 lb) when tested in accordance with Test Method D1683.

5.6.3 Non-load bearing components are exempt from these requirements.

5.7 *Flamability*—Flexible fabric-like materials used in the inflatable device shall be tested according to a modified version of the flammability of solids test method in 16 CFR 1500.44, as follows:

5.7.1 Cut test samples with dimensions of at least 610 by 100 mm (24 by 4 in.) from each accessible material available on the inflatable device. Each test sample shall be made of one material. Where possible, ensure that the sample does not include seamed edges. As seams modify the rate of spread of flame, they shall be placed in the upper part of the sample holder. If there is insufficient material to make a full sample as described above, it is acceptable to use two equal pieces of the same material with dimensions of 305 by 100 mm (12 by 4 in.) so that when they overlap, a full sample of at least 610 by 100 mm (24 by 4 in.) is obtained. In order to ensure that there is no gap at the overlap, it is acceptable to use staples to secure the joint.

5.7.2 As the rate of flame spread can be different with the direction of the fabric-like material, where there is enough material, cut the test sample with the length corresponding to the vertical direction of the inflatable when in use.

5.7.3 Place the sample in an appropriate sample holder, slightly tensioned to avoid creases, waving or curling. Both surfaces of the same material shall be tested separately.

5.7.4 Position the sample holder at a 45° (0.785 rad) angle.

5.7.5 Apply the test candle flame to the bottom edge of the test sample.

5.7.6 The rate of flame spread shall not exceed 25.4 mm/s (1.0 in./s) or shall self-extinguish. There shall be no flaming debris or molten drips.

NOTE 1—Debris that builds up on the edges of test bracket and drips is not classified as molten drips.

5.8 *Solids Flammability*—Solid materials used in the inflatable device shall be tested according to the flammability of solids test method in 16 CFR 1500.44.

5.9 *Non-Climbable Netting or Mesh*—Where used for containment or retention, the netting or mesh shall meet the strength requirements described in 5.6. The mesh size shall be small enough to prevent the 12 mm (0.5 in.) rod from passing through when tested as follows:

5.9.1 *Test Procedure for Non-Climbable Net or Mesh*—Align the probe (see Fig. 2) perpendicular to the net or mesh. Push the probe, with a 4.45 N (1.0 lbf), round end first, into the net or mesh. A net or mesh is non-climbable if the probe enters equal to or less than 12 mm (0.5 in.) deep.

5.10 *Rope Climber Nets*—Rope climber nets shall be securely attached at both ends to the inflatable device to prevent lifting by users. The rope shall be a minimum of 12 mm (0.5 in.) in diameter and securely knotted at intersections so that the knots do not slip when subjected to a 140 kg (308 lb) load or three times the manufacturer's maximum intended weight of the user, whichever is greater.

5.11 Climber nets shall comply with head and neck entrapment requirements in section 6.4.

5.12 *Climbing Ropes*—Climbing ropes shall be anchored at both ends and not be capable of being looped back on itself, creating an inside loop perimeter greater than 125 mm (5 in.).

5.13 *Zippers*—Zippers shall withstand the air pressure generated within the inflatable device. If zippers are used, they shall be easy to use from both sides. Zippers used for deflation purposes shall have the zipper pull covered from view (for example, by a flap or pocket).

6. Performance Requirements

6.1 *Anchoring:*

6.1.1 Sufficient anchor points shall be provided and located under the load and wind velocities described below to enable stability and restraint to be maintained under the manufacturer's recommended maximum loading condition and wind velocity. Anchoring for inflatable devices for outdoor use shall be designed to withstand a minimum Beaufort scale 6 wind speed (11.1 m/s).

6.1.2 The number of anchor points required shall be calculated, independently for each side, using the following formula and values below. There shall be a minimum of two anchor points per side when the result of the calculation for anchor points is less than 2. First calculate the force on each side using:

$$F = C_W \frac{\rho}{2} V^2 A \quad (1)$$

where:

F = force on the side,
C_W = wind coefficient,
ρ = density of air,

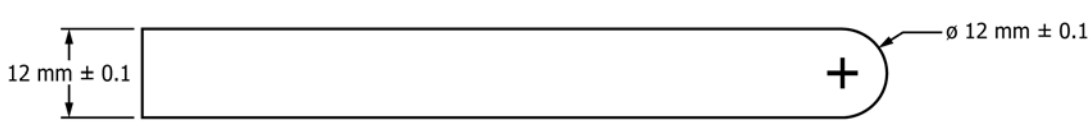

FIG. 2 Non-Climbable Net or Mesh Probe

Documents
Document Sharing Hub
Full document details: ASTM F2729-18

V = maximum wind speed, and
A = area of exposed surface in meters.

Using the following values:

C_W = 1.5
ρ = 1.24 kg/m^3
V = calculation wind velocity in m/s (Beaufort scale 6 = 11.1 m/s)
A = area of exposed surface in meters (to be determined by measurement and calculation)

The number of anchor points required on this side shall be calculated by dividing the force, F, by the force each anchor system shall be engineered to withstand, 1600 N (360 lbf), and multiplying by a safety factor of 1.5. The value shall be rounded integer to the nearest whole number. The calculation shall be repeated for each side.

The number of anchor-points required on each side is:

$N = \frac{F}{1600N} \times 1.5$ rounded up where 1.5 is a safety factor.

This calculation shall be repeated for each side.

NOTE 2—Corner anchors count as one half of an anchor on each side towards the total.

6.1.3 Stakes that are used as an anchor system shall be designed and installed so that top of the stake is below the ground level, if accessible to a user falling onto the stake.

6.1.4 All external corners along the perimeter of the inflatable device's footprint shall have anchor points. Each external corner anchor counts as one half an anchor towards the total amount of anchors per side. Based on the design configuration of the inflatable device, additional anchor points shall be required for the following configurations: (See Fig. 3) External corners (1) of extending geometry are required to be anchored. Internal corners (2) of extending geometry are not required to be anchored, unless based on the calculation of the formula. Semi-circular or circular sides (3) should be treated as a flat side and use the formula to calculate the number required along that surface.

6.1.5 Each anchor assembly system (anchor, rope, or strap and associated fittings) shall have a minimum breaking load of 1.6 kN (360 lbf) at the juncture of the strap and the inflatable device.

6.1.6 Anchor points shall not be placed at the exit of a slide or access and egress where a child may come in contact with the stake.

6.2 *Structural Integrity:*

6.2.1 *Air Pressure:*

6.2.1.1 The minimum air pressure inside the inflatable device delivered by the blower shall in all cases be sufficient to give a firm and reliable footing and adequately support the structure. The maximum individual weight specified by the manufacturer shall be placed on each structural unit without grounding.

6.2.1.2 Horizontal surfaces shall support the load specified in Table 1, without grounding. When tested in accordance with the structural integrity test method 6.2.1.3 and 6.2.1.4, the appropriate load shall remain supported by the inflatable device at each test point.

6.2.1.3 *Structural Integrity Test Method*—For platforms with an area greater than 0.93 m^2 (10 ft^2), the load, as defined in Table 1, shall be applied vertically, without shock, and the total load shall remain for 5 minutes. For the purpose of applying the load, the platform shall be divided into four equal area quadrants. The total load shall be located in equal portions, in the center of each quadrant and at the center point of the platform, for a total of 5 points. For platforms with an area less than 0.93 m^2 (10 ft^2), apply the load over a 305 mm (1 ft) diameter area.

(1) Platforms with an area less than 0.93 m^2 (10 ft^2) intended for access and egress that rest on the ground with a height of 305 mm (12 in.) or less are exempt from this requirement.

(2) Platforms with an area less than 0.93 m^2 (10 ft^2) intended for lounging are exempt from this requirement.

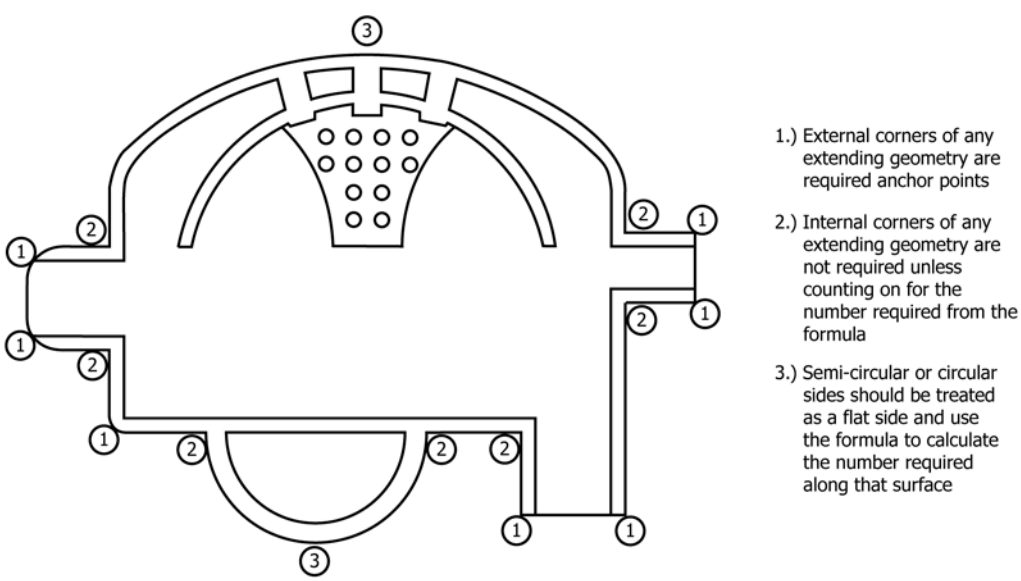

FIG. 3 Anchor Locations

Documents
Document Sharing Hub
Full document details: ASTM F2729-18

TABLE 1 Area and Load on Platform

Area m^2 (ft^2)	Load kg (lb)
<0.92 (<10)	85 (190)
0.92-1.85 (10–20)	127 (280)
1.85-2.80 (20–30)	170 (375)
2.80-3.70 (30–40)	204 (450)
>3.70 (>40)	250 (550)

(3) The exit area of a slide, for the last 460 mm (18 in.), with a height of 305 mm (12 in.) or less, is exempt from this requirement.

6.2.1.4 *Structural Integrity Test Procedure*—The loading procedure shall be as follows:

(1) Ensure the inflatable device is inflated to its specified minimum air pressure or to the pressure of the supplied blower.

(2) Select the appropriate load to be applied from Table 1.

(3) Place the individual loads indicated in Table 1 onto each individual test position selected in accordance with Fig. 4, example of test position grid, until the loads occupy all five test positions.

6.3 *Deflation:*

6.3.1 The design of an inflatable device shall ensure that, upon loss of air pressure, the inflatable device remains supported with sufficient clearances for the oldest (tallest) user and adequate time for the youngest user to evacuate.

6.3.2 It is acceptable to use an independent support system.

6.3.3 Inflatable devices shall be designed to ensure adults are able to gain access in order to assist users during evacuation.

6.3.4 The inflatable device cannot tip over and create a hazardous situation while deflating.

6.3.5 The height of entry and exit regions of all tunnels shall retain at least half of their initial inflated height at the 30 second mark.

6.3.6 *Deflation Test Method:*

6.3.6.1 Ensure the inflatable device is inflated to its specified minimum air pressure or to the pressure of the supplied blower.

6.3.6.2 Apply the appropriate test load based on the height of the highest platform as specified in Table 2.

6.3.6.3 The size of the test load shall be a 40.0 cm (16 in.) diameter sand bag.

6.3.6.4 Place the load on the geometric center of the highest platform or playing surface.

6.3.6.5 Timing begins when the blower motor is stopped.

6.3.6.6 Timing is stopped when the test load contacts the ground.

6.4 *Head and Neck Entrapment:*

6.4.1 Inflatable devices shall be designed and constructed or assembled so that any openings that are accessible to users shall meet the following performance requirements to reduce the risk of accidental head or neck entrapment by either a head-first or feet-first entry into the opening.

6.4.2 *Accessible Openings*—A completely bounded rigid opening is accessible when a torso test probe (see Fig. 5) can be inserted into the opening to a depth of 102 mm (4.0 in.) or more.

6.4.2.1 *Test Procedure for Completely Bounded Rigid Openings:*

(1) An opening fails the test if the opening admits the torso probe, but does not admit the head probe.

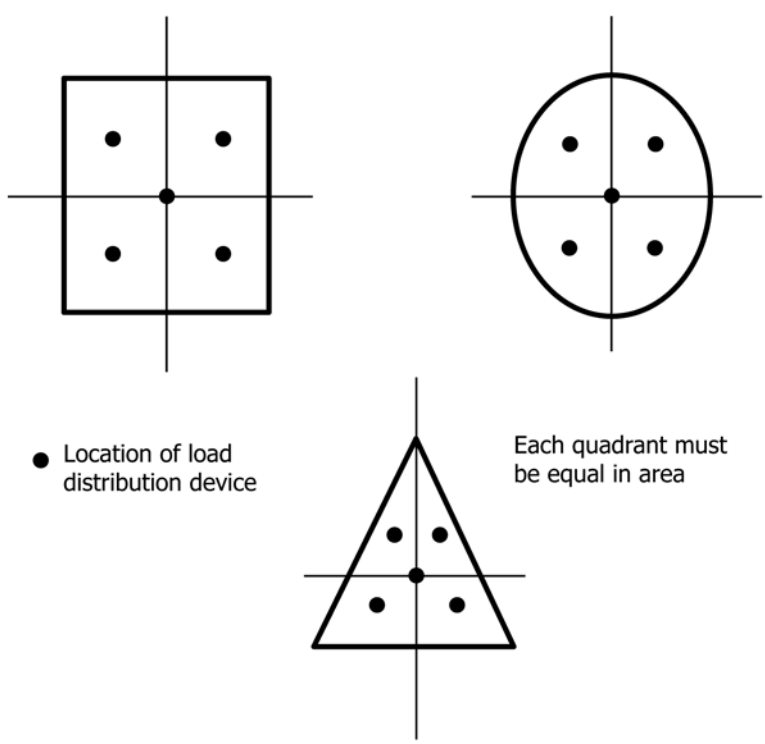

FIG. 4 Example of Test Position Grid

Documents
Document Sharing Hub
Full document details: ASTM F2729-18

TABLE 2 Deflation Load and Time

Height of Highest Platform, mm (ft)	Total Load, kg (lb)	Minimum Deflation Time
<610 mm (2)	20 (44)	10 s
610–1525 mm (2–5)	20 (44)	20 s
>1525–2134 mm (5–7)	34 (75)	30 s
>2134 mm (7)	34 (75)	40 s

(2) Place the torso probe in the opening with the plane of the base of the probe parallel to the plane of the opening; rotate the probe to its most adverse orientation (that is, major axis of the base of the probe parallel to the major axis of opening).

6.4.2.2 If the torso probe can be inserted into the opening to a depth of 102 mm (4.0 in.) or more, place the head probe (see Fig. 6) in the opening with the plane of the base of the probe parallel to the plane of the opening.

6.4.2.3 An opening passes this test if *(1)* the opening does not admit the torso probe when it is rotated to any orientation about its own axis, or *(2)* the opening admits the torso probe and also admits the head probe.

6.4.3 *Non-Rigid Completely Bounded Openings*—A non-rigid opening such as, but not limited to flexible nets, water tubing, tarps, and plastic enclosures is considered accessible if a torso probe will penetrate the opening to a depth of 102 mm (4.0 in.) or more when tested in accordance with the test procedure outlined in 6.4.3.2.

6.4.3.1 If the non-rigid opening consists of a material that can be manipulated to create a larger opening under a force of no greater than 22.2 N (5 lb) in any orientation or plane, conduct the test with the opening in its worst-case orientation under the applied force.

6.4.3.2 *Test Procedure for Completely Bounded Non-Rigid Openings:*

(1) Place the torso probe in the opening, tapered-end first, with the plane of its base parallel to the plane of the opening; rotate the probe to its most adverse orientation (that is, the major axis of the base of the probe parallel to the major axis of the opening); apply a force of 222 N (50 lb) to the probe to attempt to pass it through the opening.

(2) If the base of the probe passes through the opening, place the large head probe in the opening, tapered end first, with the plane of its base parallel to the plane of the opening. Attempt to pass it through the opening freely.

(3) A non-rigid opening passes the test if: *(a)* the opening does not allow the torso probe to be inserted so deep that the opening admits the base of the probe when it is rotated to any orientation about its own axis, or *(b)* the opening allows full passage of the torso probe and also allows the large head probe to pass completely through.

(4) A non-rigid opening fails the test if the opening allows full passage of the torso probe but does not admit the large head probe.

6.5 *Angles:*

6.5.1 The angle of any vertex formed by adjacent components shall be greater than 55° (0.96 rad), unless the lower leg is horizontal or projects downwards, refer to Fig. 7, recommended angle measurements.

6.5.2 An exception to this recommendation can be made if an in-filled shield is attached to the vertex between adjacent components and the shield is of sufficient size to prevent a 229 mm (9 in.) diameter circular template from simultaneously touching components on either side of the vertex, see Fig. 8, in-fill shield for angles.

6.6 *Entrapment of Body:*

6.6.1 Adjacent inflated surfaces shall be more than 120 mm (4.75 in.) apart if the aperture formed is more than 200 mm (7.9 in.) deep. See Fig. 9 for body entrapment examples.

6.6.2 Inflatable device tunnels shall comply with the following requirements:

6.6.2.1 Tunnels of 750 mm (29.5 in.) or less in length shall:

(1) Have an initial opening diameter of at least 400 mm (15.75 in.);

(2) Comply with head and neck entrapment requirements for non-rigid completely bounded openings; and

(3) Be capable of expansion to at least 400 mm (15.75 in.) diameter for the entire length of the inner panel under a force of no more than 222 N (50 lb).

6.6.2.2 Tunnels over 750 mm (29.5 in.) and up to 2 m (6.6 ft) in length shall be of at least 500 mm (19.7 in.) internal diameter.

6.6.2.3 Tunnels of over 2 m (6.6 ft) in length shall be at least 750 mm (29.5 in.) internal diameter and have access gaps or open branches at least every 2 m (6.6 ft).

6.7 *Protrusions:*

6.7.1 When tested, no protrusion shall extend beyond the face of the appropriate test gage as shown in Figs. 10 and 11.

6.7.2 Protrusions that are non-rigid and moveable are exempt from the requirements of 6.7.

6.7.3 Perform protrusion tests by successively placing each test gauge shown in Fig. 10 to determine if the protrusion extends beyond the face of the smallest gauge that can be successfully placed over the protrusion (for example of test gauge use, see Fig. 12).

6.7.4 *Upright Protrusions*—Protrusions that fit within any of the gauges and that project upwards from a horizontal plane shall have no projection extending more than 3 mm (0.125 in.) perpendicular to the plane of the initial surface (see Fig. 13).

6.7.5 *Forced Motion*—Protrusions shall not extend beyond the face of the test gage shown in Fig. 11. Place the gauge shown in Fig. 11 over any protrusions such that the axis of the hole is parallel to both the intended path of the travel and a horizontal plane.

6.7.6 *Slides*—Slides, including protective barriers and their method of attachment and transition areas, pose a greater risk of entanglement than other areas, therefore, the following requirements apply to slides and sliding devices:

6.7.6.1 Any accessible protrusion that allows the 76 mm (3.0 in.) protrusion gauge to pass over it shall have no projection extending perpendicular from the initial surface more than 3 mm (0.125 in.). The area that is subject to this requirement is outlined in Fig. 14. The outside surfaces of tunnel slides that are completely enclosed are not subject to the requirements of this section.

6.7.6.2 Slides shall be constructed in such a manner as to provide a smooth continuous sliding surface with no gaps or

AVA Documents
Document Sharing Hub

Full document details: ASTM F2729-18