This international standard was developed in accordance with internationally recognized principles on standardization established in the Decision on Principles for the Development of International Standards, Guides and Recommendations issued by the World Trade Organization Technical Barriers to Trade (TBT) Committee.

Designation: F2793 – 24

An American National Standard

Standard Specification for Bicycle Grips[1]

This standard is issued under the fixed designation F2793; the number immediately following the designation indicates the year of original adoption or, in the case of revision, the year of last revision. A number in parentheses indicates the year of last reapproval. A superscript epsilon (ε) indicates an editorial change since the last revision or reapproval.

INTRODUCTION

This specification defines a set of physical characteristics for Bicycle Grips and End Closures. One intent of this specification is to define certain dimensions of Bicycle Grips and End Closures applied to tubular handlebars mounted on bicycles designed for cyclists who are 12 years of age or younger. The second intent of this specification is to test the durability of the ends of the Bicycle Grips and End Closures for all bicycles where the tubular handlebar end axes are oriented within 60° of parallel to the axle axis of the steering wheel. This second intent would apply to the "BMX" and "Mountain" style tubular handlebar examples illustrated in Fig. 1, and does not apply to the "Drop" (also known as road race) style shown in the same figure.

1. Scope

1.1 This specification establishes a minimum outer diameter for the Bicycle Grip or End Closure, and the method for determining if the grip or End Closure meets the diameter.

1.2 This specification checks the following characteristics:

1.2.1 Bicycle Grip outer diameter,

1.2.2 Bicycle Grip or End Closure diameter or both, and

1.2.3 Bicycle Grip or End Closure retention or both.

1.3 This specification establishes testing requirements for the durability of Bicycle Grips and End Closures. It represents a performance standard and is not intended to dictate the design, materials, or construction of those closures.

1.4 *Units*—The values stated in SI units are to be regarded as the standard. The values in parentheses are for information only.

1.5 *This standard does not purport to address all of the safety concerns, if any, associated with its use. It is the responsibility of the user of this standard to establish appropriate safety, health, and environmental practices and determine the applicability of regulatory limitations prior to use.*

1.6 *This international standard was developed in accordance with internationally recognized principles on standardization established in the Decision on Principles for the Development of International Standards, Guides and Recommendations issued by the World Trade Organization Technical Barriers to Trade (TBT) Committee.*

2. Referenced Documents

2.1 *ASTM Standards:*[2]

F2043 Classification for Bicycle Usage

2.2 *Other Standards:*[3]

SAE J526:2000 Welded Low-Carbon Steel Tubing

3. Terminology

3.1 The term *bicycle* is defined in Classification F2043.

3.2 *Definitions of Terms Specific to This Standard:*

3.2.1 *bicycle grip, n*—parts on the handlebar that are meant to be grasped to allow for control and comfort while steering and operating the bicycle.

3.2.1.1 *Discussion*—The Bicycle Grip may or may not include a portion or all of the End Closure (see **end closure**).

3.2.2 *bicycle leg maximum, n*—a distance measured from crank rotation axis to the top center of the seat, with the seat positioned at the bicycle manufacturer's maximum allowed seat adjustment away from the crank axis, Fig. 2.

3.2.3 *end cap, n*—end plug enclosure covering open handlebar ends protecting from debris and impact, Fig. 3.

3.2.3.1 *Discussion*—Includes 'push-in plugs,' 'bar end caps,' 'lock-rings,' and 'extender plugs.'

[1] This specification is under the jurisdiction of ASTM Committee F08 on Sports Equipment, Playing Surfaces, and Facilities and is the direct responsibility of Subcommittee F08.10 on Bicycles.

Current edition approved June 1, 2024. Published June 2024. Originally approved in 2014. Last previous edition approved in 2023 as F2793 – 14 (2023). DOI: 10.1520/F2793-24.

[2] For referenced ASTM standards, visit the ASTM website, www.astm.org, or contact ASTM Customer Service at www.astm.org/contact. For *Annual Book of ASTM Standards* volume information, refer to the standard's Document Summary page on the ASTM website.

[3] Available from SAE International (SAE), 400 Commonwealth Dr., Warrendale, PA 15096-0001, http://aerospace.sae.org.

Copyright © ASTM International, 100 Barr Harbor Drive, PO Box C700, West Conshohocken, PA 19428-2959. United States

Documents
Document Sharing Hub

Full document details: ASTM F2793-24

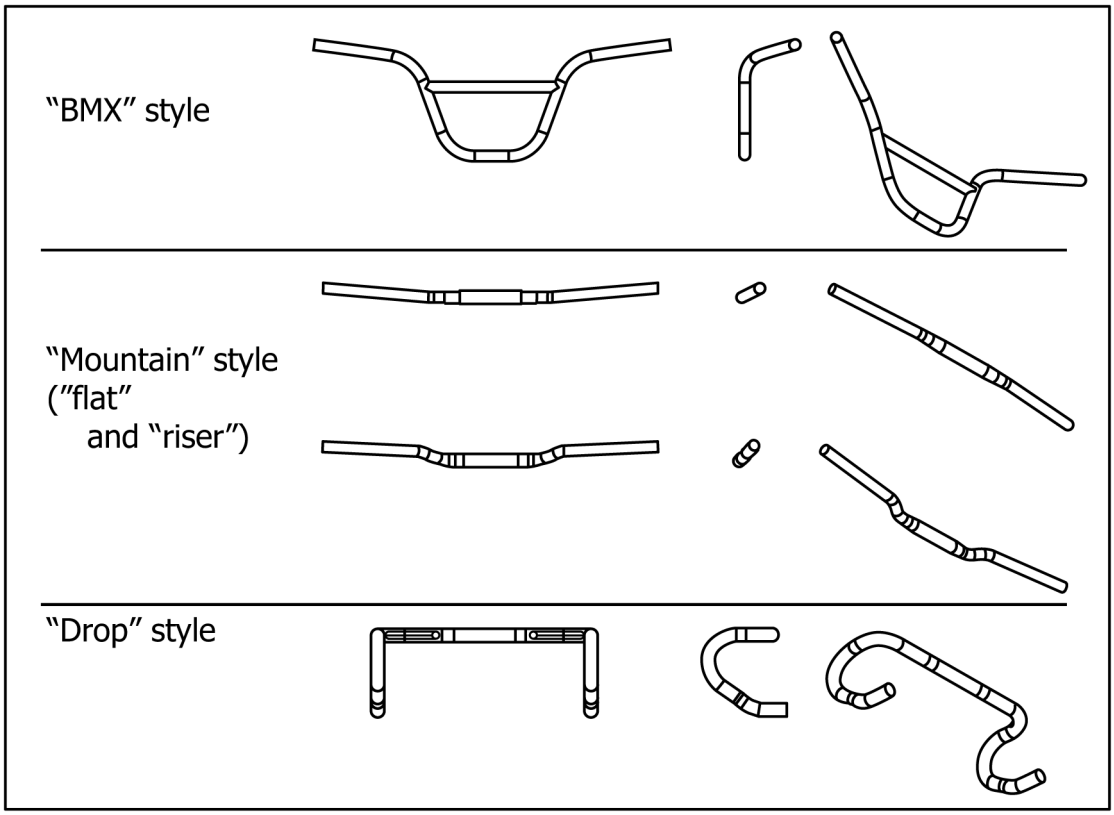

FIG. 1 Some Examples of Tubular Handlebar Styles

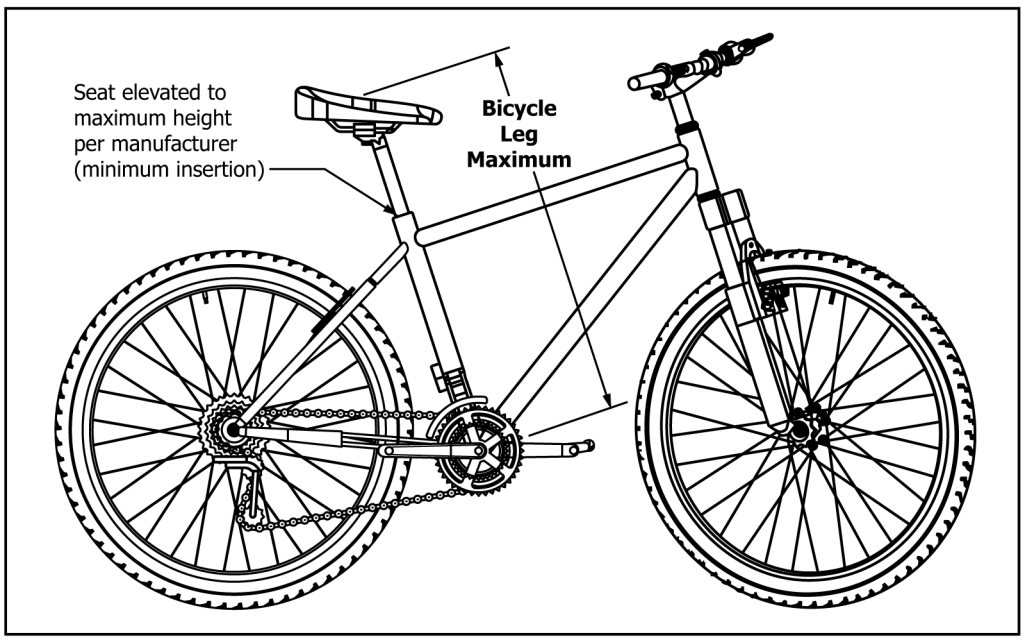

FIG. 2 Bicycle Leg Maximum

3.2.4 *end closure, n*—end cap, fitting, grip, device, or combination of parts intended to close the end of a tubular bicycle handlebar, Fig. 3.

3.2.5 *grip diameter, n*—diameter of the Bicycle Grip where the hand is placed for normal riding.

AVA Documents
Document Sharing Hub

Full document details: ASTM F2793-24

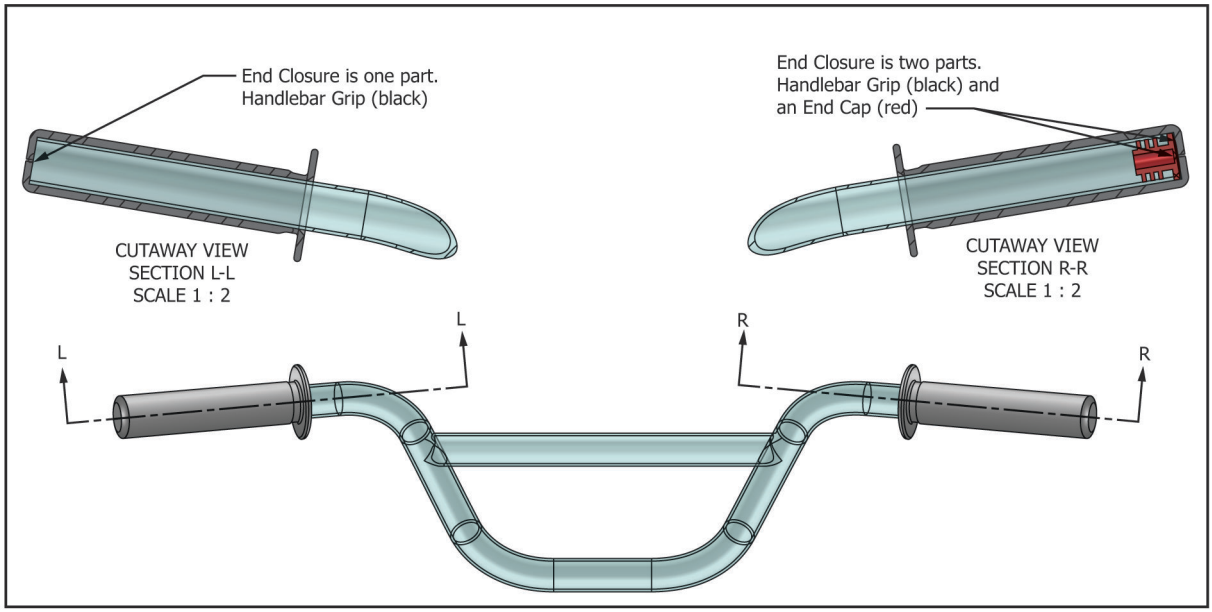

FIG. 3 Some Examples of End Closure

3.2.6 *grip end diameter, n*—diameter of the Bicycle Grip end (largest diameter within 40 mm of the handlebar end).

3.2.7 *handlebar coupon, n*—welded cold-drawn SAE 1018 steel tube with deburred edges, used to imitate a handlebar in the End Closure punch-out test, Fig. 4. Material shall meet SAE J526 specifications.

3.2.8 *OEM bar, n*—the original equipment manufacturer (OEM) handlebar as supplied, or as specified, with a complete bicycle intended to be used with the Bicycle Grip or End Closure, or both.

3.2.9 *punch out, v*—when a handlebar penetrates the End Closure exposing the end of a tubular bicycle handlebar.

3.2.10 *side extending handlebar, n*—a tubular handlebar frame whose tube axis at the location of the Bicycle Grip or End Closure, is oriented within a conical region, 60° of parallel to the direction defined by the axle axis of the steering wheel, when properly mounted on the bicycle.

3.2.11 *smooth, adj*—free from burrs, abrupt indentations, or sharp edges.

4. Performance Requirements

4.1 The following performance requirements are for Bicycle Grips and End Closures to be installed on a Side Extending Handlebar.

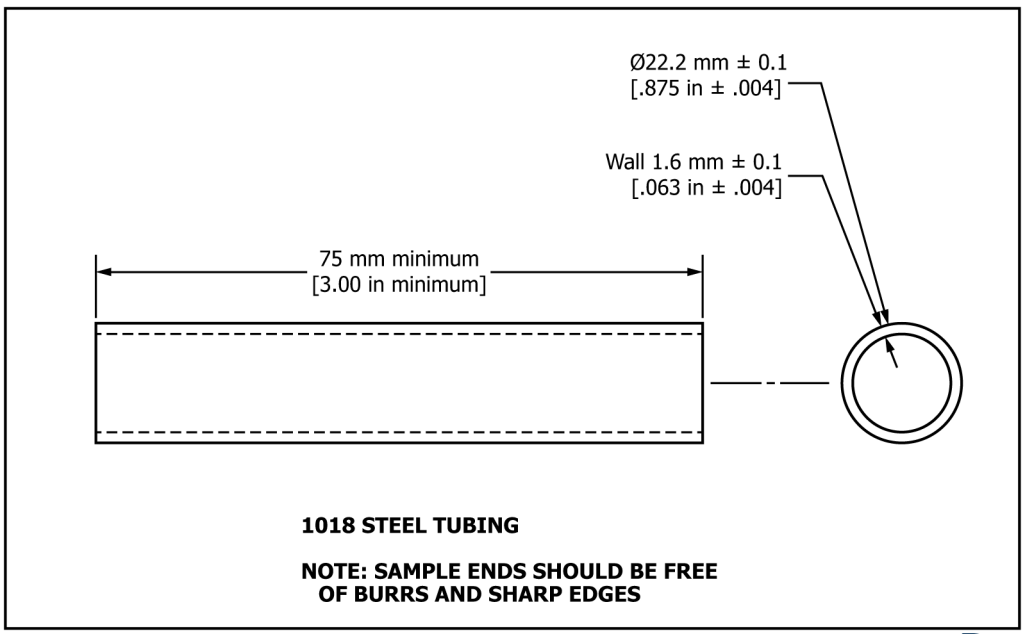

FIG. 4 Handlebar Coupon

AVA Documents
Document Sharing Hub

Full document details: ASTM F2793-24