This international standard was developed in accordance with internationally recognized principles on standardization established in the Decision on Principles for the Development of International Standards, Guides and Recommendations issued by the World Trade Organization Technical Barriers to Trade (TBT) Committee.

Designation: F2960 – 23

Standard Practice for Permanent Amusement Railway Ride Tracks and Related Devices[1]

This standard is issued under the fixed designation F2960; the number immediately following the designation indicates the year of original adoption or, in the case of revision, the year of last revision. A number in parentheses indicates the year of last reapproval. A superscript epsilon (ε) indicates an editorial change since the last revision or reapproval.

1. Scope

1.1 This standard applies to design, manufacture, installation, operation, maintenance, and inspection of permanent amusement railway ride(s) that have a track gauge greater than or equal to 12 in. (305 mm) measured between the heads of the rails and their related devices and facilities, for example, bridges, tunnels, and signal support structures, excluding rolling stock. This "track" specific standard provides requirements which are not covered in the "core" or "supporting" standards of the ASTM F24 committee.

1.2 This standard does not apply to track rides, such as roller coasters, that may resemble railways.

1.3 This standard does not apply to funiculars as defined in ANSI B77.2 (2020) or BS EN 1907 (2017).

1.4 This standard does not apply to Amusement Railway Rides and their associated track, devices and facilities that are manufactured and intended for use as a portable amusement ride or attraction.

1.5 This standard does not apply to permanently installed amusement railway rides and tourist railways, and their associated track, devices and facilities that are under the jurisdiction of the United States Federal Railroad Administration (FRA) in whole or part, or national equivalent.

1.6 *This standard does not purport to address all of the safety concerns, if any, associated with its use. It is the responsibility of the user of this standard to establish appropriate safety, health, and environmental practices and determine the applicability of regulatory limitations prior to use.*

1.7 *This international standard was developed in accordance with internationally recognized principles on standardization established in the Decision on Principles for the Development of International Standards, Guides and Recommendations issued by the World Trade Organization Technical Barriers to Trade (TBT) Committee.*

2. Referenced Documents

2.1 *ASTM Standards:*[2]

F770 Practice for Ownership, Operation, Maintenance, and Inspection of Amusement Rides and Devices

F1193 Practice for Quality, Manufacture, and Construction of Amusement Rides and Devices

F2291 Practice for Design of Amusement Rides and Devices

2.2 *Industry Standards:*

ANSI B77.2 American National Standard for Funiculars – Safety Requirements (2020)

AREMA Manual for Railway Engineering (2020)

AWPA U1 (American Wood Preserver's Association Standard) The Use Category System (2013)

BS EN 1907 Safety Requirements for Cableway Installations Designed to Carry Persons—Terminology (Funiculars) (2017)

CDC Basic Body Measurements

CFR 49 Part 213 (DOT/FRA Track Standards) (2012)

ISO 7250 Basic Human Body Measurements for Technological Design

Manual on Uniform Traffic Control Devices for Streets and Highways (MUTCD) (2009, incl Rev 1 and 2, May 2012)

SAE J833 Human Physical Dimensions

3. Terminology

3.1 *Definitions:*

3.1.1 *amusement railway ride, n*—an amusement ride that may have multiple vehicles (for example, locomotive(s), coach(es), etc.) linked together, at least one of which has on board mechanical propulsion that has an on board operator(s), utilizing flanged wheels on railroad type rails with a gauge of 12 in. or greater, that is insular to national regulations, which is designated by the Designer/Engineer as an amusement railway ride.

3.1.2 *Type AP-A track, n*—active main lines; any track where the operating speed exceeds walking speed.

[1] This practice is under the jurisdiction of ASTM Committee F24 on Amusement Rides and Devices and is the direct responsibility of Subcommittee F24.60 on Special Rides/Attractions.

Current edition approved June 1, 2023. Published July 2023. Originally approved in 2014. Last previous edition approved in 2016 as F2960 – 16. DOI: 10.1520/F2960-23.

[2] For referenced ASTM standards, visit the ASTM website, www.astm.org, or contact ASTM Customer Service at service@astm.org. For *Annual Book of ASTM Standards* volume information, refer to the standard's Document Summary page on the ASTM website.

Copyright © ASTM International, 100 Barr Harbor Drive, PO Box C700, West Conshohocken, PA 19428-2959. United States

Documents
Document Sharing Hub
Full document details: ASTM F2960-23

3.1.3 *Type AP-B track, n*—active passing tracks, loading tracks, classification yard tracks, and storage tracks; all other tracks (both active and inactive) that are not previously identified as Type AP-A track; tracks having an occasional use or a foreseeable need.

3.1.4 *Type AP-C track, n*—inactive track with no current operation requirements.

3.1.5 *walking speed, n*—less than 5 ft (1.5 m) per second.

4. Significance and Use

4.1 The user of this standard shall be required to review and comply with the referenced "core" ASTM F24 Committee standards in 2.1 of this standard. Modified or alternate requirements to those standards may be required in this standard.

4.1.1 Amusement railway sub-systems may be built to various scales, that is, rolling stock maybe to one scale and the track to another but have common gauge. The railroad's documentation or maintenance manuals shall identify the railroad standards of the respective subsystems/interfaces.

4.1.2 The Designer/Engineer's requirements shall consider the track equipment manufacturer's and rolling stock manufacturer's requirements and shall determine their appropriate interfaces.

5. Design

5.1 Design of roadway (track, ties, roadbed, and roadbed shoulder) shall be performed or overseen by the Designer/Engineer knowledgeable in Railway Engineering.

5.1.1 The Designer/Engineer shall specify the preparation of the road bed and ballast to support the rail system based upon expected loads.

5.1.2 *Drains:*

5.1.2.1 *Size and Design*—Ditches and other drainage structures (culverts, drains, and drop inlets) shall be of sufficient size and construction to handle the flow of water from rain, snow, and irrigation.

5.1.3 *Ballast:*

5.1.3.1 The Designer/Engineer shall specify if ballast shall be used.

5.1.3.2 If required, the Designer/Engineer shall specify the tamping of the ballast.

5.2 *Cross Ties:*

5.2.1 A cross tie is a structure placed transversely under both rails and secured to both rails.

5.2.2 Cross ties shall maintain track gauge.

5.2.3 Cross ties shall contribute to rail alignment.

5.2.4 Cross ties shall be made of a size and material to which rail can be securely fastened and support and distribute the load from the rails to the ballast or grade.

5.2.5 *Tie Selection:*

5.2.5.1 Ties shall possess the following attributes:

(1) Made of a size and material to which rail can be securely fastened.

(2) Provide sufficient compressive size and strength to withstand and distribute rail and train loading to the ballast or grade.

5.2.5.2 *Wood Ties*—Wood ties shall meet the requirements specified in industrially recognized standard, for example, AREMA Manual for Railway Engineering, or as specified by an Designer/Engineer.

5.2.5.3 Similar ties to wood (including plastic or composite ties) may be used provided they perform the functions above, for example, rails attached to concrete tie, steel or concrete in road crossings or in streets and are designed for the loads.

5.2.5.4 The rails shall be attached to ties or the similar systems with fasteners such that the rails are adequately supported. Drilling of the rail flange is not allowed.

5.2.5.5 *Used Ties*—Ties may be reused provided they are not considered defective as described in 9.8.5.1 but may contain holes from prior use. Ties maybe flipped over to provide new spiking surfaces.

5.2.6 *Tie Spacing*—Nominal tie spacing shall be established by the Designer/Engineer and be based upon the expected load. Also, see X5.2.6 on thematic ties.

5.3 *Tie Plates*—Tie plates are not a requirement of this standard.

5.3.1 If canted tie plates are used, each shall incline the top of the rail towards the centerline of the track. If tie plates are used, flat and canted tie plates shall not be mixed in the same rail section.

5.4 *Spikes (or fasteners):*

5.4.1 Rails shall be secured at every tie. The rail shall have a sufficient number and strength of spikes (fasteners) to effectively maintain gauge and provide sufficient rail restraint.

5.4.2 *Spiking Pattern*—Reserved.

5.5 *Joints:*

5.5.1 *Joint Bars*—Joint bars, if used, shall join rail sections together and shall match the rail size.

5.5.1.1 Only metal joint bars are allowed. At insulated joints, an insulated metal bar with insulated bolt holes shall be used.

5.5.1.2 *Compromise Joints*—Rails of different size or section shall be joined with properly designed and constructed compromise bars, taper rails, or offset welds.

5.5.1.3 Welded joints are acceptable when appropriately designed for the railway installation and specific processes (for example, annealing) are specified. Aluminum rail which has been welded shall not be used.

5.5.1.4 As a minimum, the threaded end of the bolt shall be flush with or proud of the nut.

5.5.2 *Joint Gap*—A gap between rail ends shall be installed to provide for thermal expansion resulting from maximum and minimum temperature difference within the year or other means approved by the Designer/Engineer.

5.6 *Rail Anchors*—Rail anchors shall not be used on open deck bridges. An open deck bridge is a bridge with no floor.

5.7 *Gauge Rods:*

5.7.1 A gauge rod is a device threaded at its ends with features at its end that attach to opposing rails for the purpose of maintaining the gauge distance between those rails (See Fig. 1).

5.7.2 *Application*—If used, gauge rods shall be installed at right angles to the rail with the jaws firmly gripping the base of the rail.

AVA Documents
Document Sharing Hub

Full document details: ASTM F2960-23

FIG. 1 Gauge Rods (installed on rails, ties and tie plates not shown)

5.8 *Rail*—Rail shall meet the requirements of the Designer/Engineer.

5.8.1 *Short Rail*—Short rails and joint gap fillers shall provide wheel guidance to mitigate a derailment at the maximum speed stipulated by the Operator.

5.9 *Track Geometry*—One rail shall be designated as the line rail. The alignment of the track is established by this rail. Either rail may be used as the line rail on tangent track so long as the same rail is used for the entire length of the tangent.

5.9.1 In curves, the inside rail is designated as the grade rail. The grade rail is the reference from which super-elevation is applied to the outside rail of the curve.

5.9.2 The following figures define track geometry for all gauges that shall be used by the Designer/Engineer to establish the requirements for the track. These figures will be referenced in subsequent sections.

5.9.3 *Gauge*—Gauge is the distance between a point one-half the depth of the rail head below the top surface of the two rails measured at right angles to the rail or, for standard gauge, ⅝ in. (15.9 mm) below the railhead as shown in Fig. 9. The minimum and maximum gauges shall be determined using Fig. 3 and Fig. 4 respectively.

5.9.3.1 *Gauge less than standard or if the rails are canted*—Gauge is the minimum distance between the rail heads, measured at right angles to the rails at the rail head. Canted rail is the inclination of both rails towards the center line of the track, typically by the use of inclined tie plates, usually at an incline of 1 in 20. See Fig. 10.

5.9.3.2 In curves the gauge, as defined in 5.9.3, shall be adjusted for the degree of curvature, the tread width and wheel base of the rolling stock but shall not exceed the values of Fig. 4. (See X5.9.3.2 for definition of degree of curvature.)

5.10 *Cross Level:*

5.10.1 *Definition*—Cross level is the difference in elevation between the top surfaces of the two rails measured at right angles to the track, as shown in Fig. 11

5.10.2 *Designated Cross Level*—On tangent track, the cross level shall be zero ± tolerance specified by the Designer/Engineer. On curved track, the designated cross level is equal to the designated super elevation (see 5.11). Between the tangent and curved track is the transition track. Super elevation in the transition varies from level at the tangent to full super elevation at the curve.

5.11 *Super Elevation*—Super elevation is the banking of track by raising of the outside rail or lowering of the inside rail in a curve. The amount of super elevation is a function of the degree of curvature, proposed speed of the train and the location of the center of gravity of the train vehicles. The super elevation shall be designed so that the combined force vectors from the weight of the train and the centripetal forces due to the trains speed in a curve shall act as a combined force vector intersecting the tie surface between the rails (stable) versus outside the rails (unstable). The design shall use a train speed from zero to the maximum speed, including over speed conditions, to ensure overturning stability is provided.

5.12 *Turnouts:*

5.12.1 *Turnout*—The section of rail from the tip of switch points (point of switch) to the heel of the frog shall be considered the turnout.

5.12.2 General requirements for turnouts.

5.12.3 *Materials*—All materials used within the limits of a turnout shall be specified by an Designer/Engineer and not be flame cut after manufacture.

5.12.4 *Rail*—All rail used within a turnout shall be of the same weight and section. Compromise joints are not permitted within a turnout.

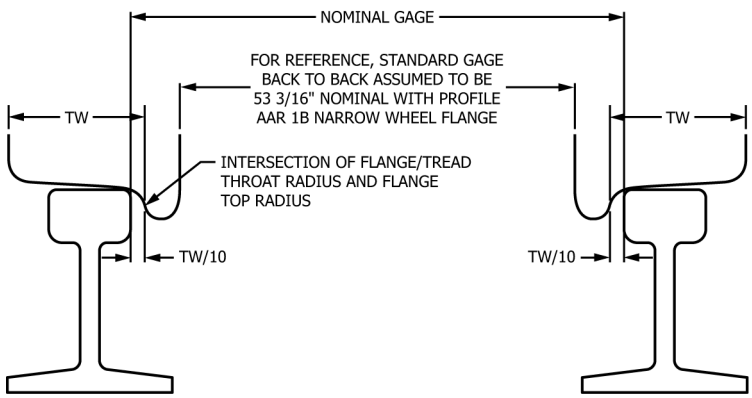

FIG. 2 Nominal Track Gauge (AAR stands for American Association of Railroads, TW stands for Tread Width)

AVA Documents
Document Sharing Hub

Full document details: ASTM F2960-23

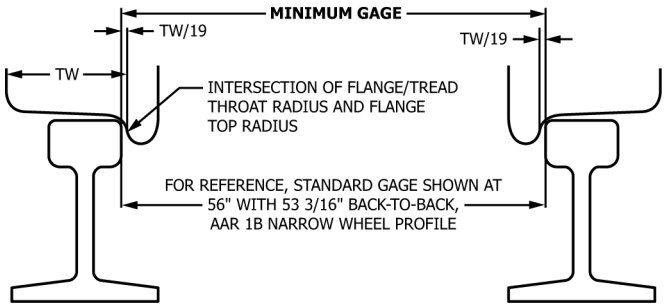

FIG. 3 Minimum Gauge for Tangent and Curved Track

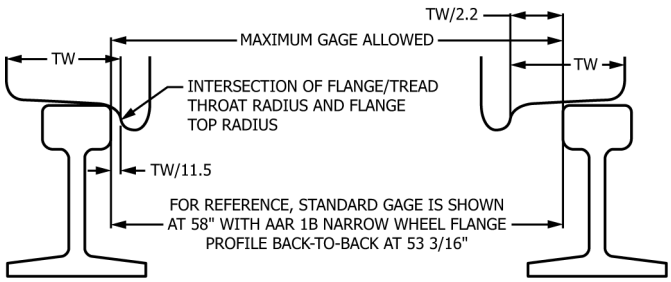

FIG. 4 Maximum Gauge for Tangent and Curved Track

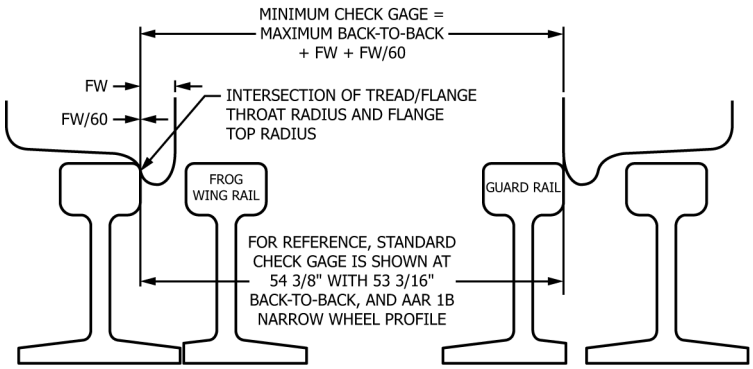

FIG. 5 Minimum Check Gauge for Guard Rails in Turnouts and Rail Crossings (FW stands for Flange Width)

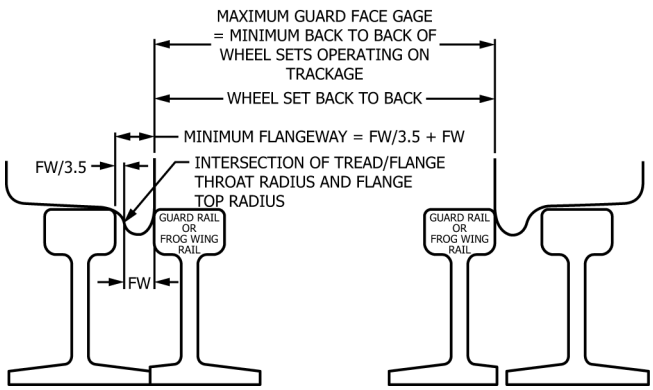

FIG. 6 Maximum Guard Face Check Gauge in Turnouts and Rail Crossings

5.12.5 *Ties*—The requirements in 5.2 of this standard shall apply to ties within the limits of a turnout.

5.12.6 *Stub Switches*—Stub switches may be used and all rules within this standard applying to turnouts shall apply to

Documents
Document Sharing Hub

Full document details: ASTM F2960-23

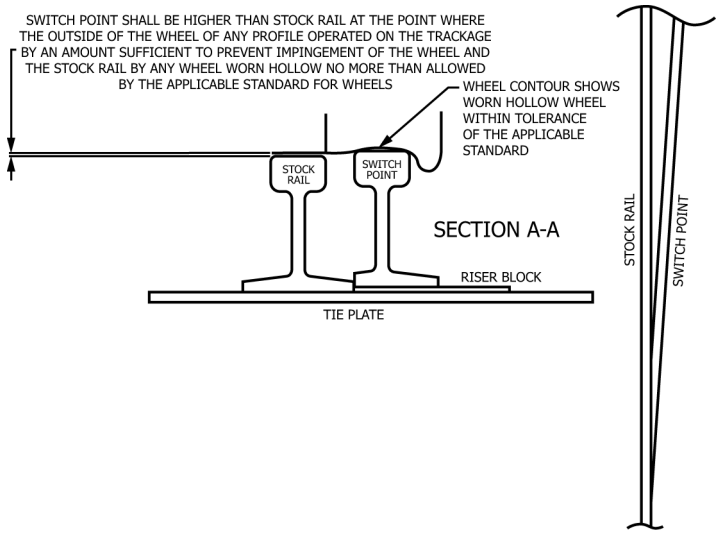

FIG. 7 Placement of Switch Point Rail to Prevent Hollow Wheels from Impinging on the Stock Rail unless it can be shown that worn hollow treads do not and will not be operated over the switch (see 5.12.9.2)

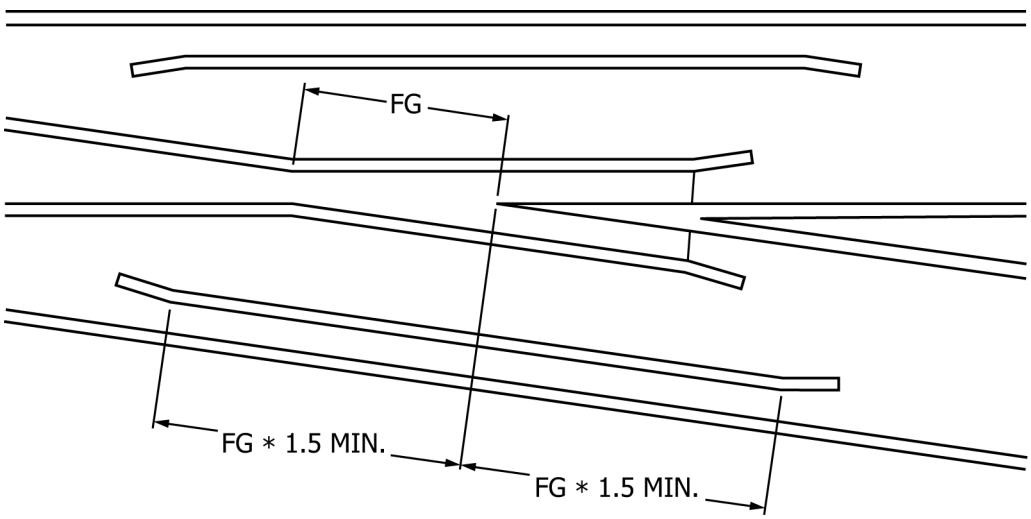

FIG. 8 Turnout Frog Minimum Guard Rail Length (FG stands for Frog Gap)

stub switches except those rules regarding the switch itself. When used, operating speed over stub switches shall be limited to twice walking speed.

5.12.6.1 Stock and closure rails shall be securely fastened and provide for proper alignment at the approach track end when the moveable approach track is thrown in either direction. The rail ends of both the approach track and the stock and closure rails shall bear on a common tie or contiguous bearing plate, or both. Means shall be provided to prevent misalignment between the approach and turnout tracks in all operating positions to the extent that a derailment potential is created at the speed allowed for the turnout.

5.12.6.2 Means shall be provided to prevent longitudinal movement of the approach, stock, and closure rails to the extent that they no longer bear on a common tie or bearing plate.

5.12.6.3 End gap between approach rails and closure/stock rails shall be sufficient to allow throwing the switch without binding.

5.12.6.4 End gap between approach rails and closure/stock rails shall not be large enough to present a derailment potential.

5.12.7 *Turnout Track Geometry*—Turnout track geometry shall conform to the requirements of the Designer/Engineer determined by Figs. 2-7.

5.12.7.1 Rail braces (see Figs. X1.9 and X1.10) shall be designed to provide proper lateral support to the stock rails in a turnout.

5.12.8 *Switch Stand*—A switch stand is the frame which holds the lever which moves the points of the switch and may also contain a banner or visual indicator of the direction of the points.

5.12.8.1 Switch stand lever lock or hook shall be installed on all switches. Switch point lock, when required, shall be installed in addition to lever lock or hook.

5.12.8.2 The switch stand, when required, shall be fully secured to the head block ties (see Fig. 12) to prevent any motion between the switch stand and the points and any resulting unintentional movement of the points. Head block

AVA Documents
Document Sharing Hub

Full document details: ASTM F2960-23

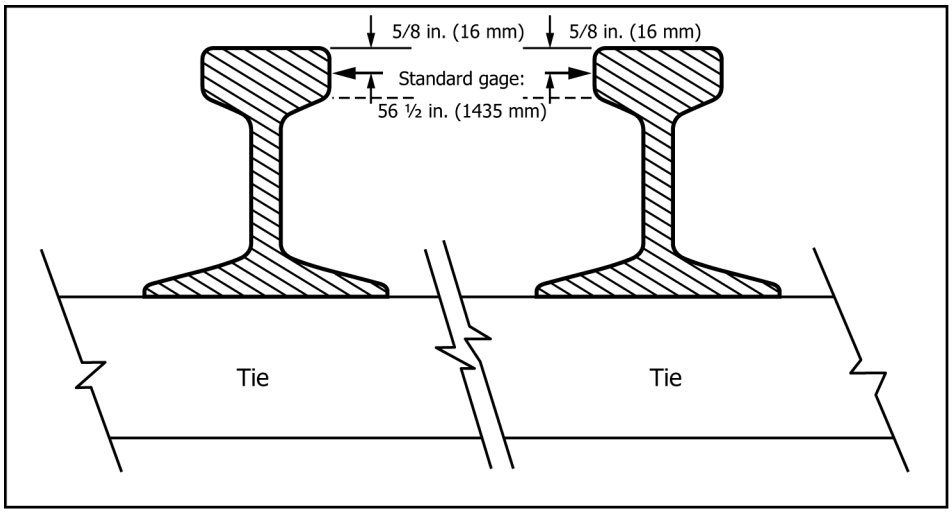

FIG. 9 Standard Railway Gauge Measurement (non canted rail)

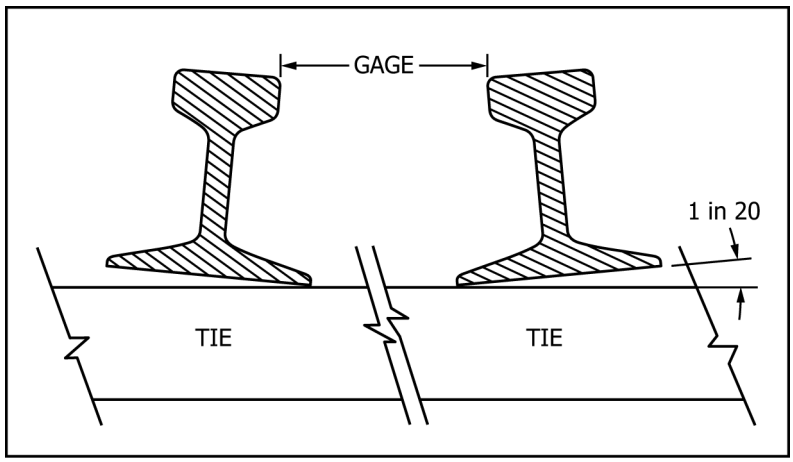

FIG. 10 Amusement Railway Gauge Measurement (canted rail)

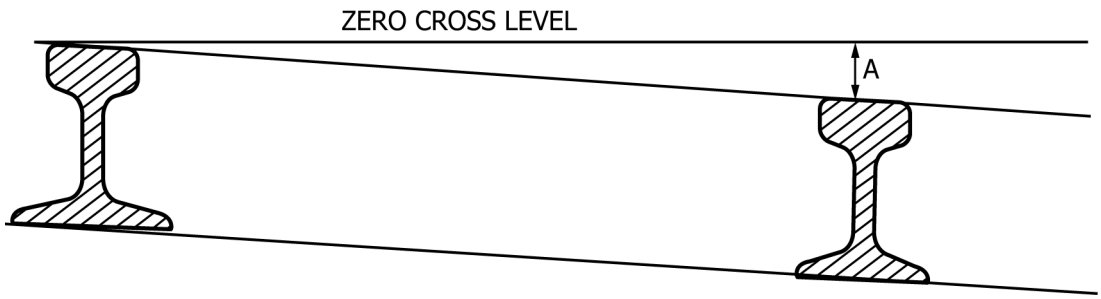

FIG. 11 Cross Level Measurement

ties are long ties that extend from under the rail points of the turnout to the switch stand.

5.12.9 *Switch Points:*

5.12.9.1 If the top surface of the milled section of the switch point is higher than the top of the stock rail, operations through the turnout shall not exceed walking speed. (See Fig. X1.13, section A-A.)

5.12.9.2 If the point rail beyond the taper is lower than the stock rail and causes wheel impingement on the stock rail, operations through the turnout shall not be permitted. See Fig. 7.

5.12.10 *Guard Rails on Turnouts:*

5.12.10.1 Guard rails shall be designed so that the straight guarding face (the portion of the guard rail parallel with and

AVA Documents
Document Sharing Hub

Full document details: ASTM F2960-23

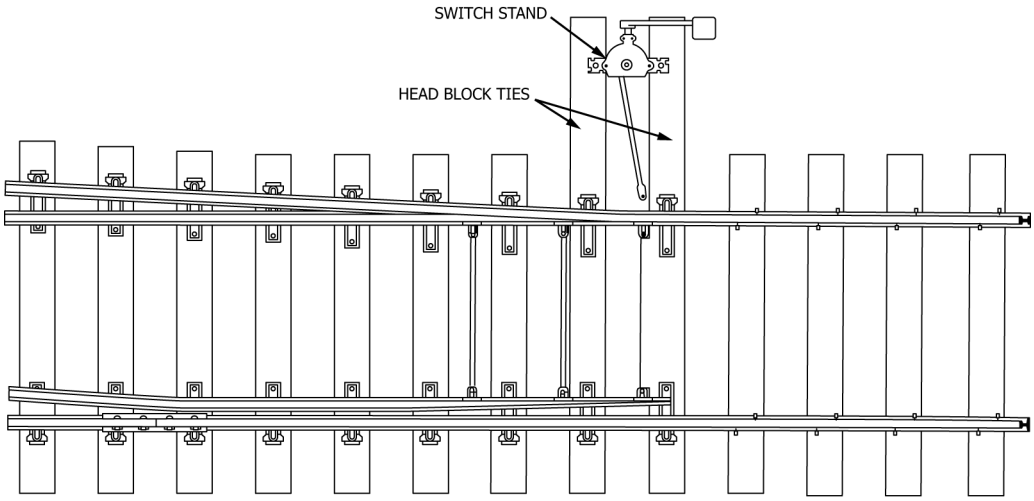

FIG. 12 Head Block Ties Supporting a Switch Stand at a Turnout

closest to the running rail) extends in advance and behind of the frog point a minimum distance equal the values given in Fig. 8.

5.12.10.2 *Check Gauge*—The minimum and maximum check gauge for guard rails in turnouts (measured to face of frog—see Fig. 13) shall be determined using Figs. 3-6; also see X5.12.10.

5.12.11 *Flangeway Width*—The minimum and maximum guard rail flangeway width shall be determined using Figs. 3-6.

5.13 *Flangeway Depth*—The minimum frog flangeway depth in turnouts shall be greater than the wheel flange height of the tallest wheel flange in service (including wear to the rolling surface of the wheels) on the line plus a margin except flangeways specifically designed to be the running surface of the wheels.

5.14 *Rail Crossings:*

5.14.1 *General*—Rail crossings are designed to carry one track across another at grade.

5.14.2 *Size*—Rail crossings shall be the proper size and section for the rails being joined.

5.14.3 *Flangeway Width*—Flangeway width at rail crossings shall be determined using Figs. 5 and 6.

5.14.4 *Flangeway Depth*—The minimum flangeway depth in a rail crossing shall be greater than the wheel flange height of the tallest wheel flange of the tallest wheel flange in service (including wear to the rolling surface of the wheels) on the line plus a margin.

5.15 *Road Crossings:*

5.15.1 *General*—Road crossings carry vehicular or patron foot traffic, or both, across rail track at grade. The roadway material that is part of the crossing and supports the rails shall be designed to withstand the permitted load over the crossing.

5.15.2 *Flangeways:*

5.15.2.1 *Flangeway Width*—Flangeway width of gauge road crossings shall not be less than the value determined using Fig. 5 increased by 33%.

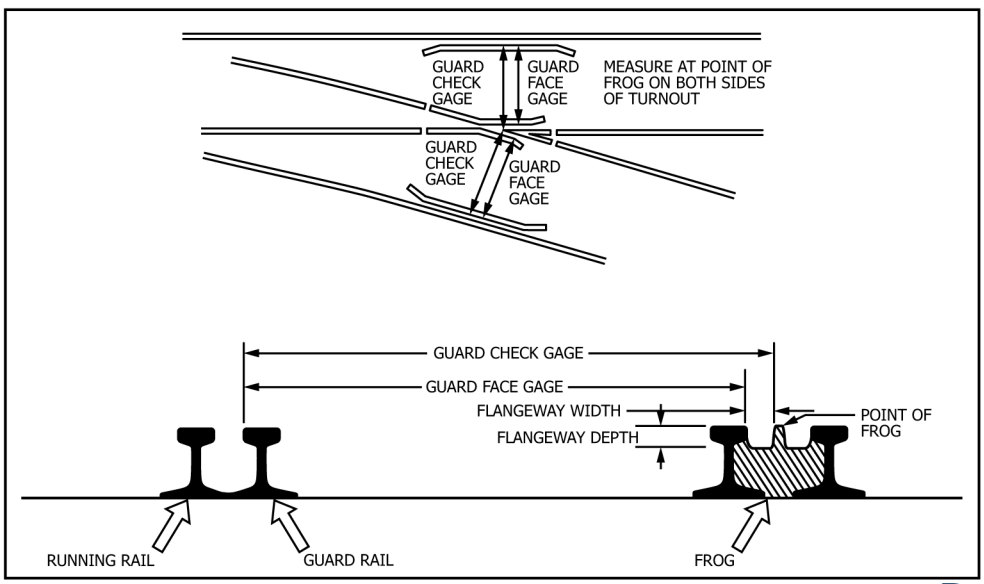

FIG. 13 Measurement of Flangeway Width & Depth, Guard Check Gauge, and Guard Face Gauge

AVA Documents
Document Sharing Hub

Full document details: ASTM F2960-23

5.15.2.2 *Flangeway Depth*—The minimum flangeway depth for road crossing shall be greater than the wheel flange height of the tallest wheel flange of the tallest wheel flange in service (including wear to the rolling surface of the wheels) on the line plus a margin.

5.15.3 *Joints*—Rail joints shall be designed to support the train loads over the maximum tie to tie pitch.

5.15.4 *Crossing Surfaces and Materials*—The crossing surface shall be designed to prevent vehicle tires from damaging or dislodging the rails. The rails may be above the crossing surface, so that the wheel running surface does not contact a hard crossing surface. Super elevation is acceptable in a curved road crossing.

5.15.5 *Crossing Protection*—Use of crossing protection shall be evaluated using the ride analysis process in Practice F2291-11, subsection 5.1.

5.15.5.1 Where track crosses public vehicular traffic at a grade crossing, signs and signals shall conform to the requirements of the Manual on Uniform Traffic Control Devices (MUTCD).

5.15.5.2 Ride analysis shall determine if crossing signage or signals are required and the size of the warning lettering.

5.15.5.3 Where track crosses a patron (non-public) crossing, signage and signals, if used, may be reduced in size to provide for thematic size, but shall provide the same information, and function, as described in the sign manufacturer's manual and comply with the ride analysis.

5.16 Reserved.

5.17 *Vehicle Clearance Envelope*—The vehicle clearance envelope shall be determined by the designer/engineer.

5.17.1 Amusement railway rides shall be designed to provide a vehicle clearance envelope adequate to prevent contact between the vehicle and other objects or surfaces where such contact is likely to impede operation. The vehicle and track dimensions shall be considered in determining the vehicle clearance envelope for normal operation. Additional space beyond the nominal vehicle dimensions to account for vehicle rocking, vibration, etc. shall be considered in the clearance envelope, if necessary.

5.17.1.1 The width of the clearance envelope shall be based on the widest part of the vehicles intended for the track. On curved sections of track, the width of the clearance envelope shall be based on the widest part of the vehicle, the distance from the trucks/bogie to the rear and front ends of the vehicle, and the radius of the track curvature. See illustration in Fig. 14.

5.17.1.2 The height of the clearance envelope shall be based on the tallest part of the tallest vehicle intended for the track.

5.17.2 All obstacles that are likely to impede vehicle operation above or adjacent to tracks shall fall outside the vehicle clearance envelope. This may include but is not limited to:

5.17.2.1 Foliage and flora that are significant enough to impede vehicle operations or impact the patron clearance envelope discussed in 5.18.

5.17.2.2 Buildings, fences, power lines, vehicles and equipment on adjacent tracks, or other human-made infrastructures/features.

5.17.2.3 Geological features such as bodies of water, rocks, and other natural or human-made features.

5.18 *Patron Clearance Envelope*—The designer/engineer shall determine the patron clearance envelope.

5.18.1 Amusement railway rides shall be designed to provide a patron clearance envelope adequate to minimize unintentional contact between the patron and other objects where said contact is likely to cause injury at normal operating speed.

5.18.2 Where objects or surfaces are allowed within the patron clearance envelope, visual or audible instructions, or both, shall be in place to instruct patrons to avoid behavior that would expose them to any contact with such features.

5.18.3 The operating speed of the amusement railway along a section of track where objects or surfaces are within the patron clearance envelope shall be assessed to determine whether contact with those objects or surfaces presents a

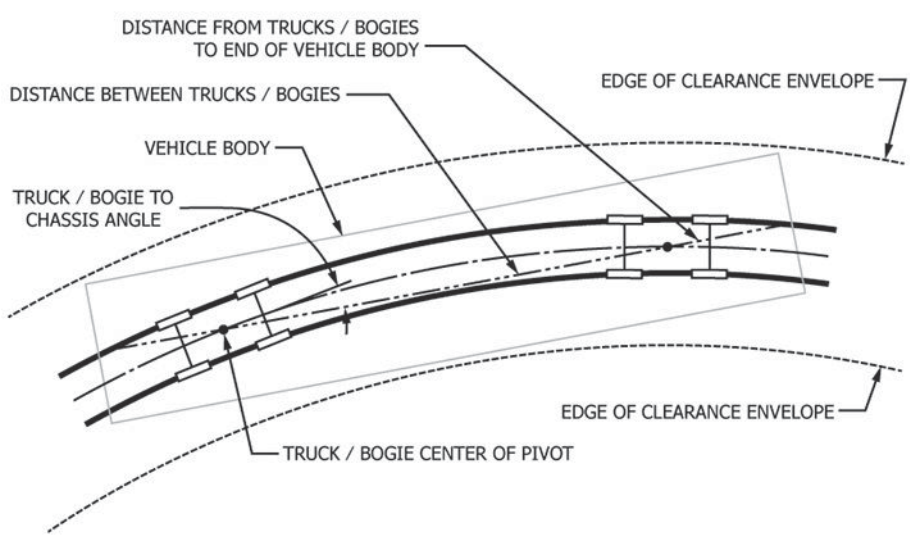

FIG. 14 Car Clearance Envelope on Curve

AVA Documents
Document Sharing Hub

Full document details: ASTM F2960-23

hazard. Reduction of speed shall be considered in order to reduce the severity of contact with surfaces within the patron clearance envelope.

5.18.4 The designer/engineer shall determine the shape and size of the required patron clearance envelope based on the appropriate patron model, the patron reach envelope, and the design of the patron containment system, if any. The minimum patron model shall be based on the physical characteristics for a 95th percentile male patron, adult or child, based on recognized and published anthropometric data, such as Dreyfuss Human Scale 4/5/6,[3] 7/8/9,[4] SAE J833, ISO 7250 or Center for Disease Control Growth Charts, with an additional (extended) arm and leg reach of not less than 3 in. (76 mm) (effectively a 99.9th percentile) male, adult or child, as appropriate. The specific anthropometric data utilized shall be documented. The designer/engineer shall consider the conditions listed in Practice F2291-22a, subsections 6.6.3.1 through 6.6.3.6.

5.18.5 The designer/engineer shall determine a means by which direct measurement may be taken to confirm that the intended patron clearance envelope is attained per Practice F2291-22a, subsection 6.6.4.

5.19 *Derails*—Reserved.

5.20 *Track Maps*—Reserved.

5.21 *Stations and Platforms*—Reserved.

5.22 *Bridges*—A bridge is an elevated structure for a railway to pass over.

5.22.1 Bridges shall be designed by a Licensed Professional Engineer or qualified person.

5.22.2 If the bridge is wide enough for a motor vehicle to drive over it, the bridge load rating shall be posted if it is "only for rail vehicles."

5.22.3 The bridge Licensed Professional Engineer or qualified person shall specify what inspections shall be performed by maintenance and which inspections shall be performed by a qualified person and their related frequencies.

5.22.4 *Guard Rails on Bridges and Trestles*—If guard rails are to be used, they shall be designed by the Designer/Engineer. See X5.21.1.4.

5.22.5 *Walkways*—For construction after the effective date of initial release of this standard, bridges, if longer than 15 ft (46 m) and higher than 30 in. (762 mm), shall comply with one of the following:

(1) A walkway that complies with the local Authority Having Jurisdiction and applicable accessibility codes.

(2) A means to exit from the bridge to level ground (for example, a ladder) or provide a safe means to walk longitudinally through the cars of the train.

5.22.5.1 If a handrail is required on the walkway, the handrail shall comply with Practice F2291-22a, Section 14.

5.22.6 Open bridges with areas over patrons' heads shall have a means of catching debris from the train and bridge surface. If applicable, locomotive liquids and vapors (for example, steam) shall be diverted from contact with patrons.

5.23 *Tunnels*—A tunnel is an underground structure for a railway to pass through. Anything else not on grade is a bridge or a covered structure.

5.23.1 The tunnel shall be designed by a Licensed Professional Engineer or qualified person.

5.23.2 The tunnel Licensed Professional Engineer or qualified person shall specify what inspections shall be performed by maintenance and which inspections shall be performed by a Bridge qualified person and their related frequencies.

5.23.3 *Guard Rails in Tunnels*—If guard rails are to be used, they shall be designed by the Designer/Engineer. See X5.22.3.

6. Manufacturing

6.1 Reserved.

7. Installation

7.1 The track system shall be installed per the requirements of the Designer/Engineer.

7.2 *Sub-grade*—Sub grade, if used, during initial installation shall be compacted and crowned per the requirements of the Designer/Engineer. The sub-grade shall extend beyond the ballast.

7.3 *Ballast:*

7.3.1 If ballast is installed, it shall extend beyond the ends of the ties.

7.3.2 If specified by the Designer/Engineer, ballast shall be tamped. Tamping may be performed after installation is complete.

7.3.3 The edges of the ballast shall be profiled per the requirements of the Designer/Engineer.

7.4 *Rails:*

7.4.1 Rails shall be secured at every tie (see 5.4).

7.4.2 Serial rails shall be joined by joint bars or welded joints (see 5.5).

7.4.3 Serially joined rails shall have a gap between them as specified by the Designer/Engineer to account for thermal expansion based upon the expected temperature range over the entire year.

7.4.4 Rails shall be smooth and continuous in line and level within the tolerances specified by the Designer/Engineer. There shall be no kinks or discontinuities.

7.5 *Ties:*

7.5.1 Ties shall be initially installed perpendicular to the rails (±20°) and properly spiked and tamped. Ties shall be installed with the top of the tie (or the tie plate) in full contact with the base of the tie plate or rail and the bottom of the tie in full contact with the ballast.

7.5.1.1 Exceptions to the perpendicularity requirement are at turnouts, edges of crossings and at ballast at the edges of crossings, edges of bridges and at ballast at the edges of bridges, as required, and be properly tamped and spiked.

7.6 *Tie Plates:*

7.6.1 Tie plates, if used, shall be installed such that the bottom surface is in contact with the top of the tie and the top surface of the tie plate is in contact with the bottom of the rail.

[3] Bardagjy, J., Diffrient, N., and Tilley, A., Humanscale 4/5/6, The MIT Press, Cambridge, MA, 1981.

[4] Bardagjy, J., Diffrient, N., and Tilley, A., Humanscale 7/8/9, The MIT Press, Cambridge, MA, 1982.

AVA Documents Document Sharing Hub

Full document details: ASTM F2960-23

7.6.2 Holes in tie plates for spikes or screws shall not located so close to the edge of the tie so when spikes or screws are installed they cause the tie to split.

7.7 Spikes or other fastening of rails to ties shall be installed as follows:

7.7.1 Driven vertical and square with the rail.

7.7.2 Driven or screwed such that the head of the fastener is in contact with the base of the rail, commonly known as driven "home."

7.8 *Switch Connecting Rods, Switch Rods, and Switch Clips:*

7.8.1 These parts shall be installed to allow unobstructed motion when the switch is thrown. Rod ends and clips shall not contact adjacent ties.

7.8.2 *Switch Connecting Rod Bolts, Switch Rod Bolts, and Clip Bolts*—Connecting rod and switch rod bolts shall be installed as required by the Designer/Engineer.

7.9 Super-elevation of rails shall be installed following requirements of the Designer/Engineer.

7.10 *Alignment*—Alignment or line requirements shall be installed following the requirements by the Designer/Engineer.

7.11 *Track Profile*—The elevations and gradients (profile) requirements shall be installed following requirements by the Designer/Engineer.

8. Operation

8.1 *Operating Restrictions*—Where this standard imposes operating restrictions, that operating restriction shall apply to any part of the train in the restricted speed area. In addition to the requirements of Practice F770-22, the Owner shall provide an operating document that includes: maximum and minimum gauge, maximum gauge in curves, flangeway widths and depths, track line and level tolerances, maximum and minimum cross level, maximum and minimum super-elevation, maximum tie spacing, minimum and maximum joint gap on tangent track, maximum and minimum joint gap in curves, and related operating restrictions.

8.1.1 In any case where the track structure is not in compliance with this standard, the design engineer or track supervisor may allow operation over the track in question under the following conditions:

8.1.1.1 Repair shall be made within 30 calendar days of discovery of the condition.

8.1.1.2 Operating speed or other restrictions shall be applied to the affected section of track so that the risk of derailment is no more than it would be over the same section of track at normal speed with no restrictions, in the judgment of the Designer/Engineer or track supervisor.

8.1.1.3 Daily inspection shall be made of the affected section of track and measurements taken as needed to ensure that the defective condition has not worsened to a point where additional restrictions must be applied or operations ceased over the affected track section.

8.1.1.4 A daily record shall be kept of the inspections made and the restrictions applied until the affected section of track is repaired. These records shall be available for inspection for one calendar year after the affected section of track is repaired.

8.1.2 *Consecutive Defective Ties*—In the absence of requirements from the Designer/Engineer limiting the number of consecutive defective ties in types AP-A and AP-B track, operating restrictions as specified in Table 1 shall be imposed.

8.1.3 *Missing or Skewed Ties*—Missing or skewed (crooked) ties are undesirable in track. At any location where the tie is missing (tie not present for twice the nominal pitch) operations shall not exceed walking speed until additional tie support is provided. A tie is also considered missing if it is unable to perform it's structural support function as described in 5.2. At any location where the tie is skewed more than 30° from perpendicular to the rail, except where intentionally designed at turnouts, bridges or crossings, operations shall not exceed walking pace until additional tie support is provided or skewed ties are straightened to reduce the tie spacing.

8.1.4 *Joints*—If one or both joint bar(s) at a rail joint is/are cracked between the center holes, operations over that location shall not exceed walking speed.

8.1.4.1 At rail joints, where one non-defective tie is not within ½ the nominal tie spacing, operations shall not exceed walking speed.

8.1.4.2 Operations shall not be permitted over any location where one or both joint bars are broken between the center two holes of the joint bar, or where worn or loose joint bars allow movement of either rail with respect to the other that is sufficient to cause derailment.

8.1.5 *Loose and Missing Bolts:*

8.1.5.1 If all bolts at a joint are loose or if there is only one bolt through each/either rail joint, train operation shall not exceed walking speed.

8.1.5.2 Train operations shall not be permitted over locations where all bolts in one rail joint are missing except where by design and approved by the Designer/Engineer, for example, the moving end of a stub switch.

8.1.6 *Rail End Mismatch:*

8.1.6.1 At any location where rail end mismatch exceeds 1⁄16 in. per ft (5 mm per meter) of gauge not to exceed 3⁄16 in. (4.8 mm) on the tread portion or gauge side of the rail, operations shall not exceed walking speed.

8.1.6.2 At any location where rail end mismatch exceeds ⅛ in. per ft (10 mm per meter) of gauge not to exceed ½ in. (12.7 mm) on the tread portion or gauge side of the rail, operations shall not be permitted.

8.1.6.3 *Joint Gap*—At any location where the joint gap between rail ends exceeds the value specified by the rolling stock manufacture or the Designer/Engineer, operations shall not exceed walking speed at that location.

8.2 *Rail:*

8.2.1 *Defective Rail and Remedial Actions*—Appendix X2 provides brief descriptions of the common rail defects that may

TABLE 1 Defective Ties (non thematic "functional" ties, see X5.3.4 regarding thematic ties)

Number of Consecutive Defective Ties	Operating Restrictions
0-2 ties	None
3 ties	Walking Speed
4+ ties	No operation

AVA Documents
Document Sharing Hub

Full document details: ASTM F2960-23

be observed in track. A list of rail defects and remedial actions for rail defects are presented in Annex A1, Table A1.1. For standard gauge, where rail defects have been identified but remedial action has not been completed, the operating restrictions presented in Annex A1, Table A1.1 shall apply. For non-standard gauge, the Designer/Engineer shall provide operational restrictions and limits for rail defects.

8.2.2 *Switch Points*—If a switch point is worn or damaged beyond the limits of 9.16, operations through the turnout shall not exceed walking speed.

8.2.2.1 If the top surface of the end of the switch point is higher than the top of the stock rail, operations through the turnout shall not exceed walking speed (see Fig. X1.13, section A-A and B-B).

8.2.2.2 If the point rail beyond the taper is lower than the stock rail, operations through the turnout shall not be permitted (see Fig. 7 and Fig. X1.13, section C-C).

8.2.2.3 Where turnout latches or locks are required per design and either are missing, damaged, insecure, or otherwise inoperative, operations through the turnout shall not be permitted unless the points are secured preventing their movement and preventing a train approach against the switch.

8.2.2.4 When switch stands are installed and operations through a non-spring switch results in visible lateral movement of the stand or opening of the switch points (point gap), operations though the turnout shall not be permitted unless the points are secured preventing their movement.

8.2.2.5 If the connecting rod, switch rod, or switch clip is insecurely fastened or is damaged, operations through the turnout shall not be permitted unless the points are secured preventing their movement.

8.2.3 *Switch Heel (bolts, fillers, and joint bars)*—The heel of the switch shall be secure according to the requirements of the Designer/Engineer.

8.2.3.1 Rail braces shall be used on turnouts as needed to maintain proper geometry for the maximum operating speed permitted over the turnout.

8.2.4 *Frog Flangeways*—The minimum and maximum frog flangeway width shall be to the requirements of the Designer/Engineer.

8.2.5 *Frog Flangeway Depth*—Frog flangeway depth shall be to the requirements of the Designer/Engineer.

8.2.5.1 *Guard Check Gauge*—Guard check gauge measured to face of frog (see Fig. 13) shall be to the requirements of the Designer/Engineer.

8.2.6 *Guard Face Gauge*—Standard guard face gauge shall be to the requirements of the Designer/Engineer.

8.2.7 *Guard Flangeway Width*—Standard gauge guard rail flangeway width shall be to the requirements of the Designer/Engineer.

8.3 *Rail Crossing Requirements:*

8.3.1 *Flangeway Width*—Flangeway width for rail crossings shall be to the requirements of the Designer/Engineer.

8.3.2 *Flangeway Depth*—Flangeway depth for rail crossings shall be to the requirements of the Designer/Engineer.

8.4 *Road Crossings:*

8.4.1 *Flangeway Width*—The minimum flange way width shall be determined by the Designer/Engineer.

8.4.2 *Flangeway Depth*—The standard flangeway depth shall be determined by the Designer/Engineer.

8.5 *Track Gauge:*

8.5.1 *Gauge*—At any location where the rail to rail gauge exceeds the required value of the Designer/Engineer, the track shall be returned to the required specifications before operation is permitted. As an alternative, equipment may be tested over the track in question and if the equipment can safely traverse the track, operations may resume but speed is limited to walking speed until the track is returned to the required dimensions. See 8.1.1.

8.6 *Allowable Cross Level Deviations and Operating Restrictions*—Deviations and operating restrictions provided by the Designer/Engineer shall be utilized for the railway.

8.7 *Alignment*—Operating speed restrictions related to track alignment, line and level shall follow the requirements of the Designer/Engineer.

8.8 *Adverse Conditions:*

8.8.1 Train operations over a bridge structure suffering from reasonably foreseeable adverse condition shall not be permitted until the bridge is examined and known to be safe.

8.8.2 Train operations in a tunnel or tunnel foundation suffering from reasonably foreseeable adverse condition shall not be permitted until the tunnel is examined and known to be safe.

8.9 Prior to the operation of a track switch, personnel operating the switch stand/switch shall complete appropriate training per Practice F770-22.

8.10 If the rails are covered by water, operation shall not be allowed.

9. Maintenance

9.1 Maintenance personnel shall maintain the track system per the requirements of the Designer/Engineer and this standard.

9.2 Maintenance inspections shall be performed per Practice F770 excepted as noted in the text of this document.

9.3 *Frequencies of Maintenance Inspections:*

9.3.1 As a minimum, track designated as either Type AP-A or Type AP-B shall be inspected at the intervals shown in Table 2.

9.3.2 Type AP-C track shall be inspected in accordance with 9.3.3.

9.3.3 Track that has not been used for a period of 6 months or more (infrequently used track) shall be inspected prior to the first movement over the track.

TABLE 2 Minimum Track Inspection Frequencies

NOTE 1—These detailed track inspections are in addition to the daily pre-opening inspection requirements as outlined in Practice F770-22 and Practice F1193-22.

Traffic Frequency	Inspection Frequency
Daily Movement (conveying Patrons every day)	Weekly
Weekly Movement	Monthly
Less Than One Movement per Week	Every 3 Months

AVA Documents
Document Sharing Hub

Full document details: ASTM F2960-23

9.3.4 Maintenance personel shall perform the maintenance inspections, 9.8 through 9.22.3, to the schedule prescribed by Table 2.

9.3.5 Track inspections shall be conducted in the immediate area of an incident following a derailment or accident causing damage to the track.

9.3.5.1 Track inspections shall be conducted following unusual occurances such as flood (any portion of the track or tie or ballast becomes submerged and remain submerged), fire, moderate or greater seismic event (see Appendix X9.3.5), severe storm (that is, hurricane, tornado, rain in excess of 3 in. (76 mm) in 3 hours or lightning strike to the track), or other occurrence which could have an adverse effect on the track structure.

9.3.5.2 These inspections shall be conducted prior to the first movement over the track following the unusual occurrence, and include, but not limited to, inspections of trestles, overpasses, bridges, covered bridges, overhead objects, crossing signals, tunnels, and other railway devices and equipment.

9.3.5.3 For a moderate or greater seismic event, the inspections shall also confirm that there are no visually discernible discontinuities in the line and level of the rail, no subsidence of the road bed, no recent fissures in the earth within 100 ft (30 m) of the roadbed, ballast and other support of the rails is in place. If there are bridges or tunnels as part of the track system, they shall be specifically inspected.

9.4 Track inspections shall be performed on foot or in an on-track vehicle at a speed which is conducive to effective track inspection. Track inspections of turnouts, road crossings, rail crossings, bridges, and drainage structures shall be performed on foot.

9.4.1 At intervals specified by the Designer/Engineer, at least once per year, unless a visual defect is found prior to the yearly inspections, the gauge of AP-A & AP-B track shall be measured:

9.4.1.1 At intervals of not less than at mid-rail and at rail joints and the discrepancies recorded.

9.4.1.2 In turnouts, just ahead of switch points. (See Fig. 15.)

9.4.1.3 In turnouts, at the joints.

9.4.1.4 At the point of frog on both sides of turnouts and rail crossings. (See Fig. 15.)

9.4.1.5 Wherever there is a dark streak running along the field side of the top surface of the rail head.

9.4.1.6 Wherever wear marks on a tie or tie plate indicate lateral tie plate movement.

9.4.1.7 At locations where ties are badly and non-purposely skewed.

9.4.1.8 Any place there is a kink or deviation in the track course.

9.4.1.9 In road crossings.

9.4.2 The data shall be evaluated for compliance with the gauge limits.

9.5 *Inspections of Partially Visible Track*—At locations where vegetation, dirt, debris, or other undesirable materials cover the ties or rail, or both, preventing effective track inspection, train operations shall not exceed walking speed. If debris covers the top of rail or the flangeway, the debris shall be removed prior to effective track inspection.

9.6 *Hazardous Conditions*—Reasonably foreseeable conditions presenting a hazard to the safe movement of trains shall be corrected prior to the first movement of a train over that location.

9.6.1 Any defects discovered that affect operation or operating restrictions shall be communicated to the operator.

9.7 *Drainage*—Within the watershed that includes the railroad attraction, an inspection of ditches and other drainage structures shall be performed after rains that may have adversely affected the roadway.

9.7.1 Drainage ditches and structures shall be cleared of obstructions which may interfere with the flow of water and allow proper drainage.

9.7.2 Existing drain covers shall be in place and secure.

9.7.3 Particular attention shall be given to drainage conditions at turnouts, rail crossings, road crossings, bridge ends, and all locations where conditions may restrict adequate drainage.

9.7.4 An inspection of drainage structures and channels shall be performed at least annually.

9.8 *Roadway:*

9.8.1 *General*—The roadway shall be inspected for the following defects:

9.8.1.1 Ballast/sub grade pumping (significant up and down motion of the rail or tie, or both, as train passes over track section).

9.8.1.2 Erosion of embankments and cut slopes.

9.8.1.3 Embankment sliding or slippage.

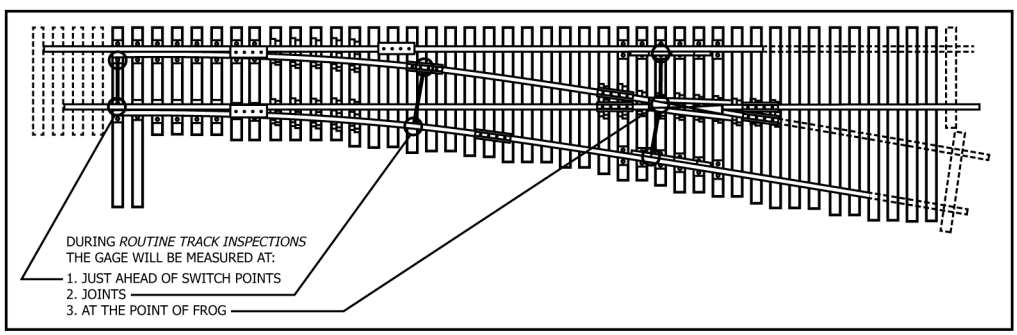

FIG. 15 Required Gauge Measurement Locations Within Turnouts

AVA Documents
Document Sharing Hub

Full document details: ASTM F2960-23