This international standard was developed in accordance with internationally recognized principles on standardization established in the Decision on Principles for the Development of International Standards, Guides and Recommendations issued by the World Trade Organization Technical Barriers to Trade (TBT) Committee.

Designation: F3443 – 20

Standard Practice for Load Handling When Using an Exoskeleton[1]

This standard is issued under the fixed designation F3443; the number immediately following the designation indicates the year of original adoption or, in the case of revision, the year of last revision. A number in parentheses indicates the year of last reapproval. A superscript epsilon (ε) indicates an editorial change since the last revision or reapproval.

1. Scope

1.1 This practice provides a structure for documenting test methods used to evaluate exoskeleton success criteria during a requested load handling task. The practice does not describe all loads, load types, nor load handling methods. Instead, this practice provides manufacturers and users with example load handling test procedures of common load handling tasks and a method to record load and test parameters so that load handling tasks can be replicated. The practice includes designs for defined artifact loads and the appendix provides design details, to further allow replication of load handling tests and test results, and examples of load handling tests.

1.2 Evaluation and evaluation method would be included in another standard with inputs (for example, precision, statistical validity, etc.) provided by the test requestor.

1.3 Output of the evaluation, that is, success criteria, are provided by the requestor.

1.4 Loads encompass forces applied to physical objects, for example: lifting boxes, pushing a force plate or cart, carrying flexible firehose or luggage.

1.5 If possible, tests using real or artifact loads should be replicable and performed in environments representative of a real-world load handling implementation.

1.6 This standard includes only the use of inanimate objects.

1.7 The values stated in SI units are to be regarded as the standard. The values given in parentheses are not precise mathematical conversions to imperial units. They are close approximate equivalents for the purpose of specifying material dimensions or quantities that are readily available to avoid excessive fabrication costs of test apparatuses while maintaining repeatability and reproducibility of the test method results. These values given in parentheses are provided for information only and are not considered standard.

1.8 *This standard does not purport to address all of the safety concerns, if any, associated with its use. It is the responsibility of the user of this standard to establish appropriate safety, health, and environmental practices and determine the applicability of regulatory limitations prior to use.*

1.9 *This international standard was developed in accordance with internationally recognized principles on standardization established in the Decision on Principles for the Development of International Standards, Guides and Recommendations issued by the World Trade Organization Technical Barriers to Trade (TBT) Committee.*

2. Referenced Documents

2.1 *ASTM Standards:*[2]

F3200 Terminology for Driverless Automatic Guided Industrial Vehicles

F3323 Terminology for Exoskeletons and Exosuits

F3427 Practice for Documenting Environmental Conditions for Utilization with Exoskeleton Test Methods

2.2 *Other Standards:*

ISO 13482:2014 Robots and robotic devices -- Safety requirements for personal care robots[3]

ISO/DTR 23482-2 Robotics -- Application of ISO 13482 -- Part 2: Application guide[3]

3. Terminology

3.1 General terminology for ASTM F48 standards are listed in Terminology F3323-19. Terminology specific to this standard are shown in this section.

3.2 *Definitions:*

3.2.1 *backpack or rucksack, n*—a bag or frame with shoulder straps that allow it to be carried on one's back.

3.2.2 *bag, n*—a filled (for example, with grain), flexible, sealed, object with no handle.

3.2.3 *bag, handle, n*—object with handle(s) on top, typically carried to the side and below the arm, and may be flexible or rigid.

[1] This practice is under the jurisdiction of ASTM Committee F48 on Exoskeletons and Exosuits and is the direct responsibility of Subcommittee F48.03 on Task Performance and Environmental Considerations.

Current edition approved June 15, 2020. Published August 2020. DOI: 10.1520/F3443-20.

[2] For referenced ASTM standards, visit the ASTM website, www.astm.org, or contact ASTM Customer Service at service@astm.org. For *Annual Book of ASTM Standards* volume information, refer to the standard's Document Summary page on the ASTM website.

[3] Available from International Organization for Standardization (ISO), ISO Central Secretariat, BIBC II, Chemin de Blandonnet 8, CP 401, 1214 Vernier, Geneva, Switzerland, http://www.iso.org.

Copyright © ASTM International, 100 Barr Harbor Drive, PO Box C700, West Conshohocken, PA 19428-2959. United States

Documents
Document Sharing Hub

Full document details: ASTM F3443-20

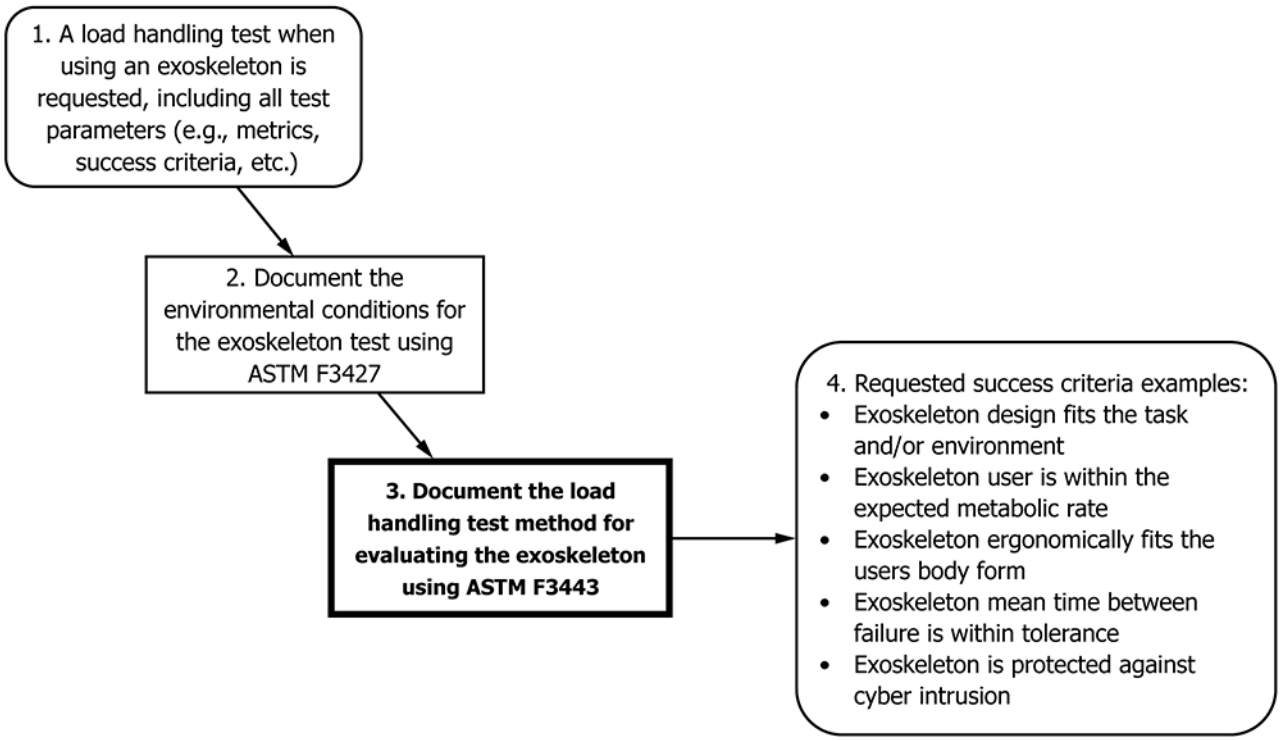

This practice is shown in the bold outlined box #3.

FIG. 1 Flow Chart for Performing Load Handling Test Methods

3.2.4 *box, n*—a container with a flat base and sides, typically square or rectangular that may include a lid and is held with hands from the container bottom or squeezed with hands on opposing sides.

3.2.5 *crate, tote, n*—a box with two handles directly above the sides.

3.2.6 *flexible load, n*—an object that is capable of bending easily without breaking.

3.2.7 *object, n*—a material that can be seen and touched. **[Oxford English Dictionary]**

3.2.8 *repetition, n*—performance of a task. **[F3200-18a]**

3.2.9 *rigid load, n*—an object that is unable to bend or be forced out of shape; not flexible.

3.2.10 *test, n*—a collection of task repetitions. **[F3200-18a]**

3.2.11 *test requestor, n*—(sometimes called test sponsor) person or organization selecting the test(s) and defining the conditions under which they are performed. **[F3200-18a]**

3.2.12 *test settings, n*—all variables for a particular test method including those of the apparatus, method, and procedure. **[F3200-18a]**

3.2.13 *test supervisor, n*—person responsible for setting up the apparatus, instrumentation, directing, and reporting results of the test according to the test requestor or test sponsor. **[F3200-18a]**

3.2.14 *test technician, n*—person(s) responsible for executing the test procedures under supervision of the test supervisor. **[F3200-18a]**

4. Summary of Practice

4.1 This practice is outlined as follows:

4.1.1 Significance and use (Section 5) explains the relevance and meaning of the practice beginning with a figure showing a flow chart for performing load handling test methods.

4.1.2 Loads (Section 6) describes real test loads or artifacts, or both, that simulate test loads corresponding to exoskeleton applications. Six types of load artifacts are described for use in load handling tests. Load acquisition/grasping and load handling positions are included.

4.1.3 A test method then begins with a scope (Section 7) describing load handling tests and procedures that can be used as examples so that test replication can occur. The examples can be used directly or applied to unique load handling tests as requested.

4.1.4 Significance and use (Section 8) describes the meaning and suitability of the load handling test for exoskeleton evaluation and assumptions that may affect the results.

4.1.5 Safety hazards (Section 9) and warnings are described.

4.1.6 Guidance on statistical significance (Section 10) describes the reliability of results based on probability of success for a specified number of test repetitions.

4.1.7 The procedure (Section 11) describes the example test method steps to be performed for each repetition of the test so that test replication may occur.

4.1.8 Precision and bias (Section 12) provides an explanation of closeness of agreement between test results obtained and systematic errors of test results that may occur.

AVA Documents
Document Sharing Hub

Full document details: ASTM F3443-20

TABLE 1 Example Typical Load Types, per Sector, Color Coded to Match Load/Force Artifacts

Industrial	*Medical*	*Military*	*Response*	*Recreation/ Entertainment*
cartons, boxes	carts	cartons, boxes	cartons, boxes	cartons, boxes
crates, totes	wheelchairs	lead shielding	crates, totes	totes
bags, duffle	rolling patient lifts	bags, duffle	bags, duffle	bags, duffle
carts	human, animal dummy	human, animal dummy	litter, sked, back board, stretcher	backpacks
pallet jack		rucksack, backpack	carts	sporting equipment
tools (e.g., saw, grinder, sledge hammer, lugger)		anchor chain, ship rope	human, animal dummy	camera equipment
bags, no handle		weapons, missiles	backpacks	tools (e.g., wrench, screwdriver)
		tools (e.g., saw, sledge hammer, lugger)	firehose	
			weapons (e.g., SWAT)	
			tools (e.g., jaws-of-life, pike pole, halligan bar)	

4.1.9 An example test report (Section 13) is provided and this section describes the report parameters to be documented.

4.1.10 An appendix of non-mandatory information to aid understanding and utilization of the standard includes typical

AVA Documents
Document Sharing Hub

Full document details: ASTM F3443-20

TABLE 2 Artifact Types that Address Loads shown in Table 1

Load Box Artifact	Back Load Artifact	Human Dummy Artifact
Load Cylinder Artifact	Flexible Cylinder Load Artifact	Force Bar Artifact
varying artifacts		

Colors in boxes correspond to Table 1 example typical loads. The white box labeled varying artifacts corresponds to Table 1 white boxes that are too broad to categorize with a single artifact.

load handling tasks by sector, example load handling test apparatus designs, example load artifact and load artifact holder designs, and example load handling test reports.

5. Significance and Use

5.1 This practice guides the user through selection of loads and example load handling tests and procedures for use in evaluating exoskeletons worn by the user. The practice is designed to allow replication of loads and tests. Fig. 1 shows a flow chart for performing load handling test methods. Initially, the load handling test is requested by a manufacturer, user/potential user, etc. as in box 1. The environment in which the test is to be performed is documented using Practice F3427 as in box 2. This practice is shown in box 3 where documentation of the load and test results occurs. Evaluation of results occurs after the test has been completed as in box 4.

5.2 It is expected that this practice provides test guidance for many, although not all, load handling activities using exoskeletons that may occur. However, the test method provides examples to be used directly or as guidance for developing additional load artifacts and load handling tests.

6. Loads

6.1 The actual (real) load can be used for the load handling test. For test replication, use the exact model number of the load or use an artifact that simulates the load as described in 6.3.

6.2 Examples of typical loads from various sectors that use exoskeletons are shown in Table 1. Color coding of typical loads equate to Table 2 Artifacts that simulate typical loads.

6.3 *Load Artifacts*

6.3.1 *Load Box Artifact:*

6.3.1.1 Fig. 2 shows the load box artifact *(a)* in a tray of adjustable tolerance, *(b)* aligned to a bolt circle, and *(c)* hanging on hooks. The load box artifact includes a rectangular shaped bottom with sides mounted to the bottom to form a boxed structure. Handles are mounted on the top of the sides as in a crate/tote. A bolt hole pattern is located in the center of the bottom allowing load box alignment to a bolt pattern (for example, a wheel on an automobile hub). Two additional holes are located at the bottom ends just within the ends allowing load box hanging.

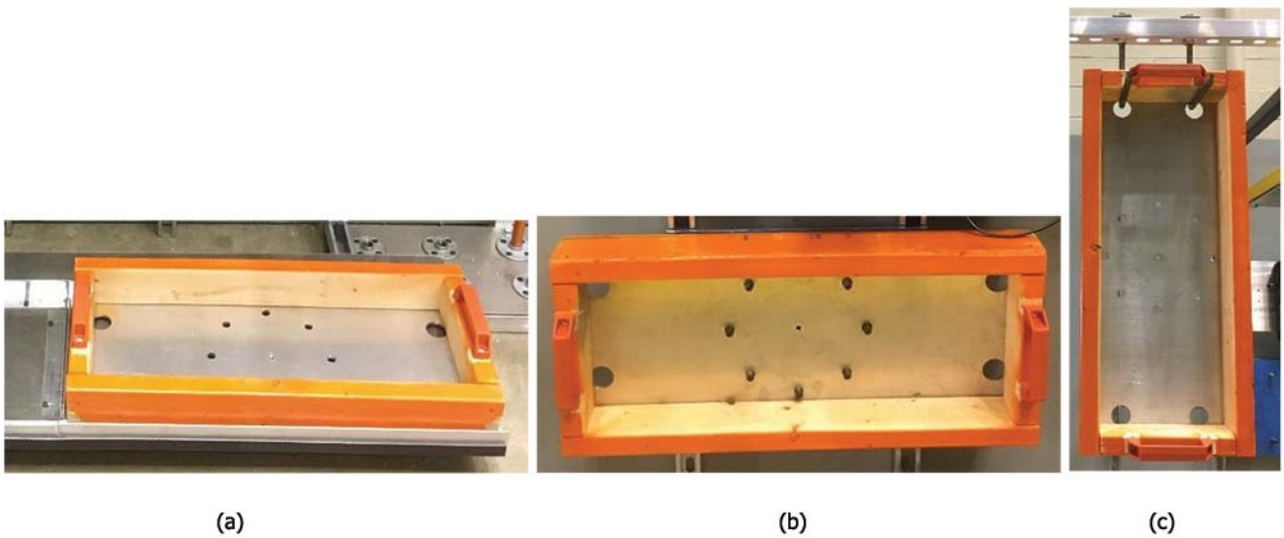

(a) in a tray of adjustable tolerance,
(b) aligned to a bolt circle, and
(c) hanging on hooks.

FIG. 2 Load Box Artifact

Documents
Document Sharing Hub
Full document details: ASTM F3443-20

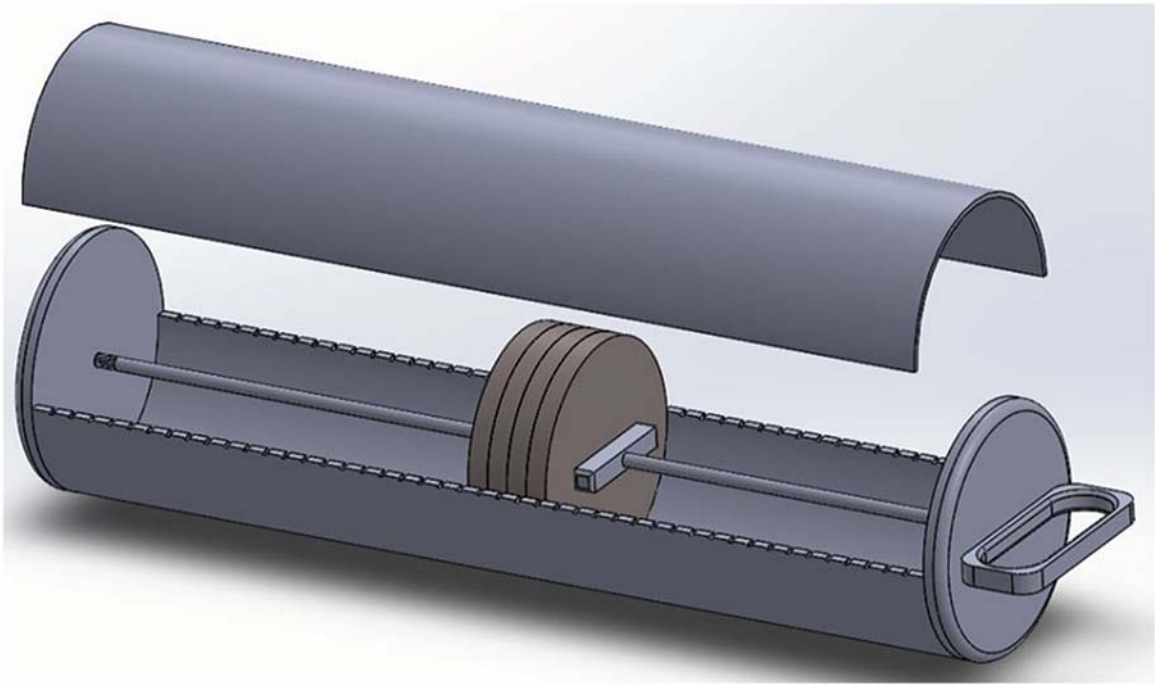

FIG. 3 (a) Load Cylinder Artifact
Static Configuration

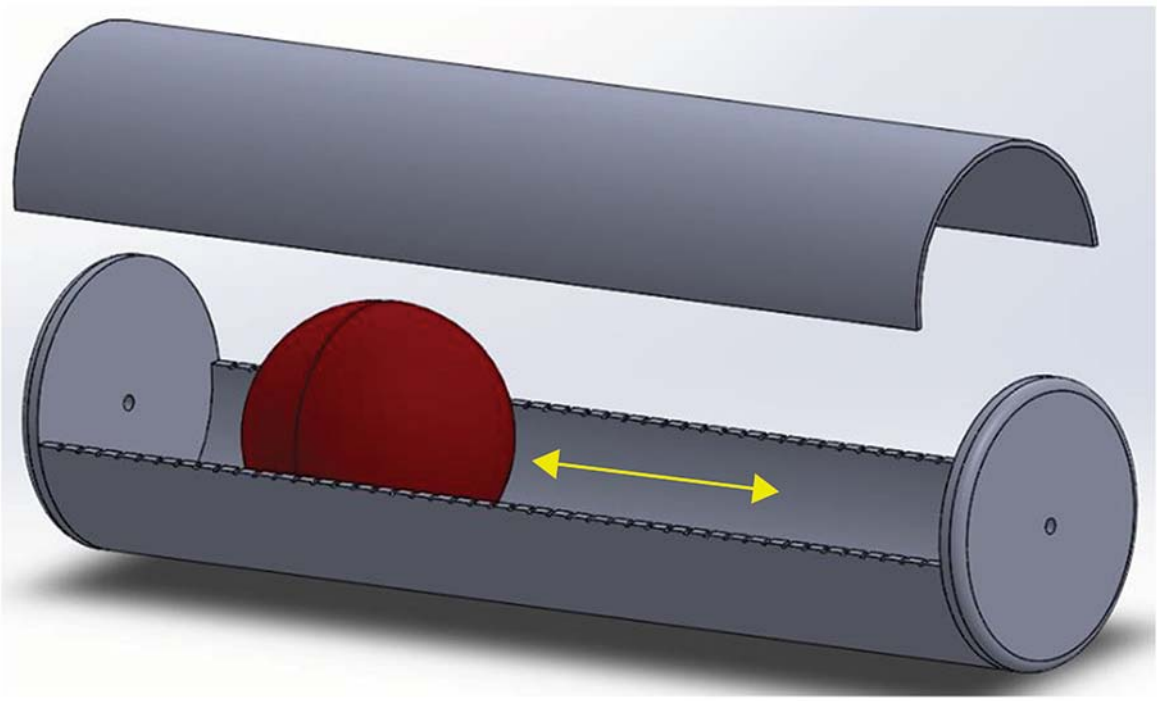

FIG. 3 (b) Load Cylinder Artifact
Dynamic Configuration *(continued)*

6.3.1.2 The load box artifact detailed design is shown in Fig. X3.1.

6.3.1.3 The load box artifact weight can vary with construction materials or by adding weight to the box (or both) inside using a center bottom tapped hole and weight fastening screw.

6.3.2 *Load Cylinder:*

6.3.2.1 Fig. 3 shows the load cylinder artifact. The load cylinder artifact includes a smooth split-cylinder and includes smooth circular ends. For the static configuration, shown in Fig. 3(a), a handle is located on one end of the artifact to carry the load as a handle bag. A threaded rod is attached to the handle and screws through the cylinder artifact to the opposite

AVA Documents
Document Sharing Hub

Full document details: ASTM F3443-20

end plate allowing additional weights to be added and fixtured to any location within the artifact.

6.3.2.2 The load cylinder artifact weight can vary with construction materials, or by adding and fixturing weight within the cylinder using wingnuts screwed onto the center threaded rod, or both.

6.3.2.3 The smooth cylinder allows artifact carry, for example on shoulders or on arms. A cover can complete the cylinder.

6.3.2.4 Fig. 3(b) shows the load cylinder in a dynamic configuration where the red sphere is a weight that can move within the cylinder housing and creating a dynamic load controlled by the exoskeleton user.

6.3.2.5 The load cylinder artifact detailed design is shown in Appendix X2, Fig. X2.7.

6.3.3 *Back Load:*

6.3.3.1 Fig. 4 shows an example back load artifact. The artifact is a frame worn on the user's back as a backpack/rucksack. The back load artifact can be an off-the-shelf item, although the specific model number of the item is required for test method replication. The frame allows additional items, such as weights, other artifacts, or actual loads (for example, military communication box, tent) to be attached.

6.3.3.2 The back load artifact weight can vary with construction materials or by adding and fixturing weight, or both.

6.3.4 *Flexible Cylinder Load Artifact:*

6.3.4.1 Fig. 5 shows the flexible cylinder artifact. The artifact includes one or more cylindrical components (Fig. 5(a)) that can be attached to one another with a single screw allowing a hinged joint between components. The components are smooth cylinders and when assembled form a long rigid cylinder (Fig. 5(b), for example, a charged firehose) if the connecting screws are tightened or a long flexible cylinder (Fig. 5(c), for example, an uncharged firehose) if the connecting screws are loose.

6.3.4.2 The flexible cylinder load artifact weight can vary with construction materials or by adding weight (for example, water, sand, steel balls) within each component and capped, or both.

6.3.4.3 The smooth cylinder allows artifact carry, for example on shoulders or on arms.

6.3.4.4 The flexible cylinder load artifact detailed design is shown in Appendix X2, Fig. X2.8.

6.3.4.5 Cylinders can be covered with a sheath/skin, on each component (for example, rubber) or over a portion of the entire

FIG. 4 Back Load Artifact

Documents
Document Sharing Hub
Full document details: ASTM F3443-20

(a)

(b)

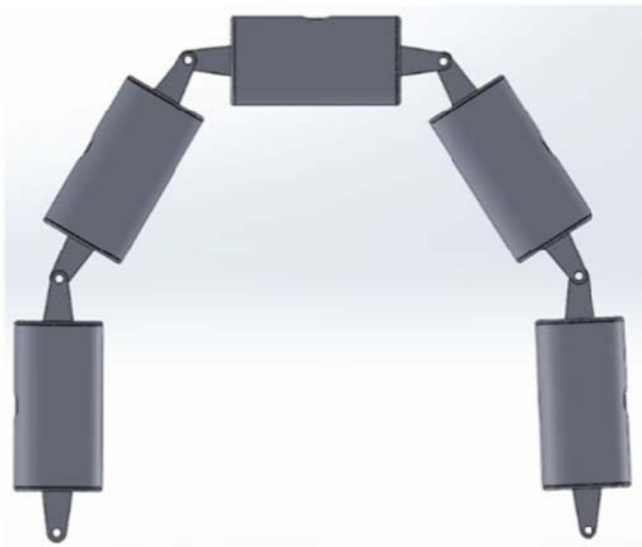

(c)

(a) hollow component with cap,
(b) several components assembled and flexed, and
(c) several components aligned.

FIG. 5 Flexible Cylinder Artifact

artifact to, for example, simulate a hose. The sheathing must also be documented in the report to allow replication of the artifact and test.

6.3.5 *Human Dummy:*

6.3.5.1 Fig. 6 shows example human dummy artifacts. These artifacts are flexible and provide a three-dimensional human profile that can be carried or dragged during load handling tests. The human dummy artifact can be an off-the-shelf item, although the specific model number of the item is required for test method replication.

6.3.5.2 The human dummy artifact can be purchased in varying weights and sizes (for example, child through adult). Additional weight can also be added to the human dummy artifact by adding loads with exact model numbers provided or through use of additional artifacts, or both (for example, a back load artifact or box load artifact, or both).

6.3.6 *Force Bar:*

6.3.6.1 Fig. 7 shows the force bar artifact. The artifact includes a bar connected to two load cells and spaced from the supporting wall or structure using connecting bars and support braces. The load cells are each electrically connected to displays showing the push or pull force applied to the bar. Lights provide the exoskeleton user and test administrators an indication that the requested force was reached for each of both

Documents
Document Sharing Hub

Full document details: ASTM F3443-20

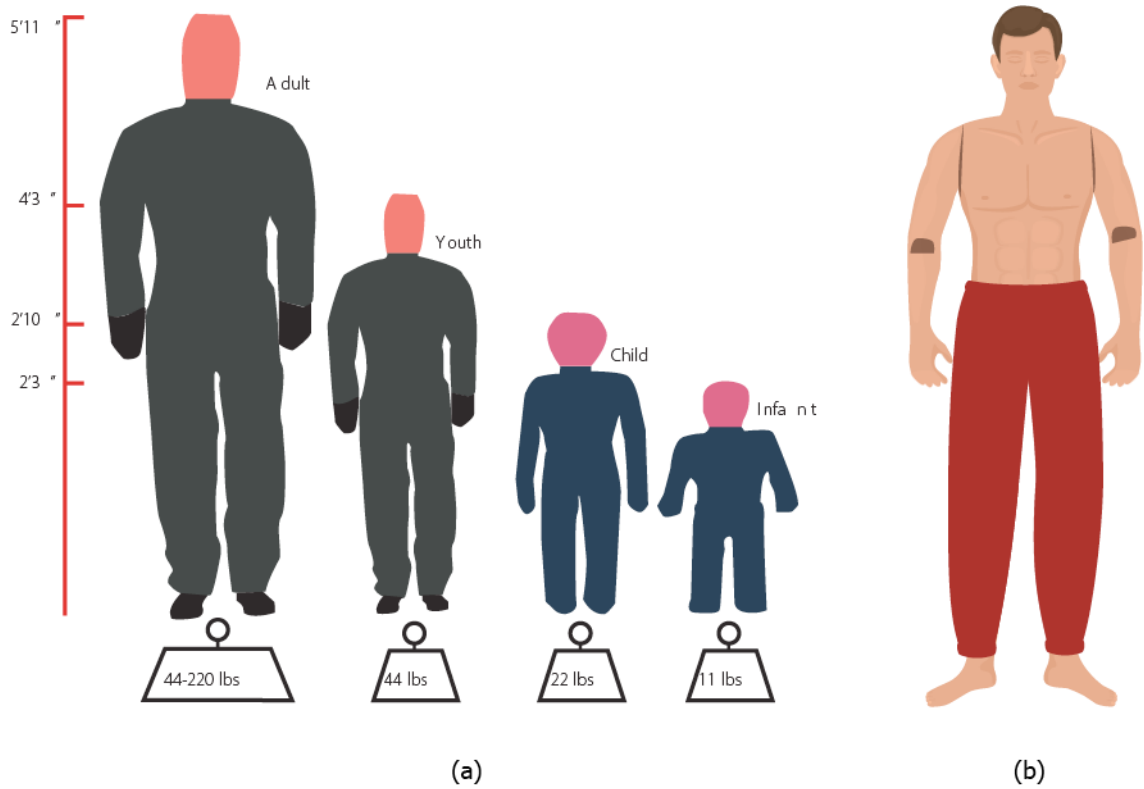

See References section (1-6).

FIG. 6 Examples of Human Dummy Artifacts

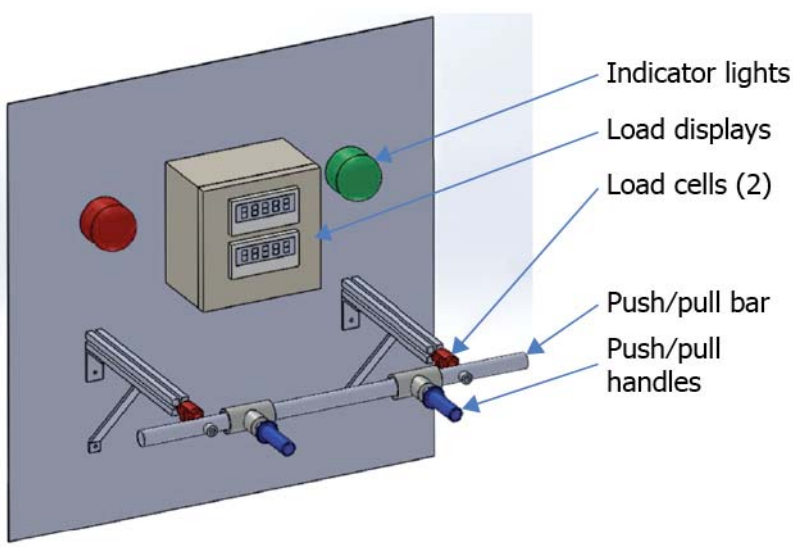

FIG. 7 Force Bar Artifact

load cells. Additionally, push/pull handles are connected to the bar that simulate wheelchair or similar handle locations.

6.3.6.2 The force bar artifact can be mounted at any height and distance from the supporting wall or structure. Ideally, the artifact is mounted at cart or wheelchair height that is representative of the real implementation. The user grip location on the bar should also be similar to the real world implementation.

6.3.6.3 The force bar artifact load is determined by the requestor. For example, two types of loads can be measured by the artifact: stiction loads (force to begin moving a wheeled load) and rolling load (force to maintain motion of the wheeled load). These two loads and their durations should be determined by the requestor.

6.3.7 *Force Plates:*

Documents
Document Sharing Hub

Full document details: ASTM F3443-20

6.3.7.1 Off-the-shelf force plates, as shown in Fig. 8, are not considered artifacts, but instead a tool for measuring loads. For tests that include the user holding or working with, for example, tools or an artifact, the exoskeleton user is instead using the held object and also applying forces. Force plates are therefore used to measure applied forces directly from the exoskeleton user or from a tool(s) held by the user, along the requested force vector, at the requested location, and for a requested duration. For example, forces may be applied from a grinder held by an exoskeleton user in a downward, forward, or upward direction and at the floor, wall, or ceiling for a period of 30 s each. Another example, torques may be applied from a screwdriver by an exoskeleton user in a downward, forward, or upward direction and at the floor, wall, or ceiling for a period of 30 s each.

6.3.7.2 Applied forces or torques can be variable, as set by the requestor, or with variable duration, or both. The requestor should define the exact profile of force or torque and time to ensure repeatability.

6.3.7.3 Artifacts can be combined within a test method. For example, a load box artifact or a load cylinder artifact, or both, in/attached to a back load artifact as depicted in Fig. 9.

6.4 *Load Acquire/Grasp:*

6.4.1 Loads can be acquired or grasped by the exoskeleton user using one or more of the following methods:

6.4.1.1 *Beneath the Load*—For example, box.

6.4.1.2 *Using Handles on Top of the Load*—For example, a device with handles, handle bag.

6.4.1.3 *Using Handles in Front*—For example, a cart.

6.4.1.4 *Using Handles on the Sides of the Load*—For example, crate/tote.

6.4.1.5 *Squeezing the Load*—For example, box, tire/wheel.

6.4.1.6 *Shoulder Support of the Load*—For example, missile, bag.

6.4.1.7 *Back Support of the Load*—For example, military rucksack.

6.5 *Load Handling Position:*

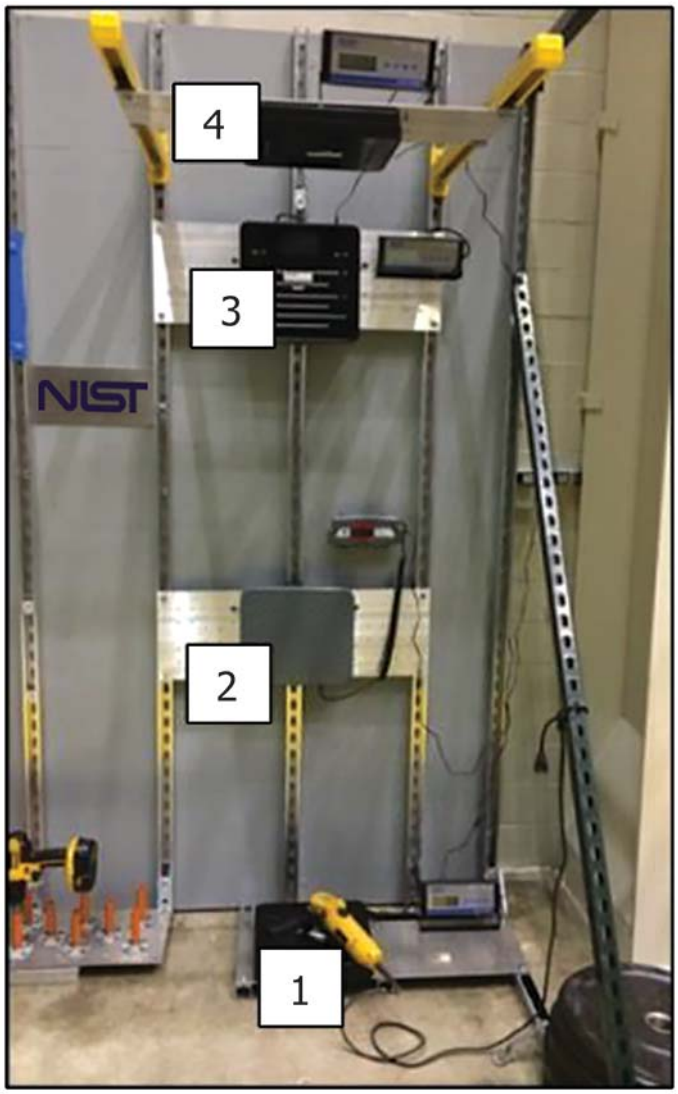

FIG. 8 Force Plates Mounted on the (1) Floor, (2) Low Wall, (3) High Wall, and (4) Ceiling

AVA Documents
Document Sharing Hub

Full document details: ASTM F3443-20

FIG. 9 Combination of Artifacts

6.5.1 Loads can be picked up, held, carried, or positioned, or combinations thereof, in one or more of the following locations relative to the exoskeleton user:

6.5.1.1 *Front—(1)* the load is accessed and held using one hand in front of the body and at a measured distance; or *(2)* accessed and held with two hands in front of the body and at a measured distance with the hands having narrow or wide separation with respect to one another; or *(3)* pushed/pulled as with a cart.

6.5.1.2 *Side*—The load is accessed and held using one hand below the arm and beside the body (for example, a handle bag) or one hand raised to the side (for example, weight lift).

6.5.1.3 *On Back*—The load is held on the users back.

6.5.1.4 *On Shoulder*—The load is held on the users shoulder(s).

TEST METHOD

7. Scope

7.1 This test method, as part of this Standard Practice for Load Handling When Using an Exoskeleton, describes the procedure outlined in Fig. 1, and other relevant information to perform load handling tests using real world loads or the artifacts described in Section 6.

7.2 As there are an infinite number of load handling tasks that can be performed in the real world using exoskeletons, this test method provides a series of test method examples for guidance on developing and performing repeatable load handling tests by exoskeleton users and manufacturers.

7.3 *Test Method Examples*—The following are examples that can be used as a guide for developing and implementing load handling tests when using exoskeletons. The standard user should detail the test performed similar to these examples.

7.3.1 *Example 1*—Load box artifact (or a real case of beer load).

7.3.1.1 The load is a 24-case of glass beer bottles that measures 46-cm long × 31-cm wide × 23-cm high (18-in. long × 12-in. wide × 9-in. high), with cut-out handles as shown in Fig. 10(a). It weighs 18 kg (40 lbs), and the weight is equally distributed. Alternatively, a load box artifact weighted the same as the real load can be used as the load as shown in Fig. 10(b).

7.3.1.2 The user is instructed to grip the load using the handles.

7.3.1.3 The user is instructed to hold/carry the load at torso level with the case touching their stomach or chest, or both. No instructions are given on how specifically to lift up or place down the load.

7.3.1.4 The user starts by standing 31 cm (1 ft) in front of a 102-cm wide × 122-cm deep × 17-cm tall (40-in. wide × 48-in. deep × 6.5-in. tall) pallet with the load on top. The user begins in a comfortable standing posture, facing the load with feet side-by-side and approximately shoulder width apart.

7.3.1.5 The load begins on the center of the pallet. The load is oriented so that handles are located on left and right sides relative to person facing the load.

7.3.1.6 The user is instructed to lift the load, turn 180°, then carry it 305 cm (10 ft) in a straight line to a 76-cm high (30-in. high) table, and place the load on the table. There are no other obstacles in the environment.

7.3.1.7 The load is to be placed so that it is fully on the table (not overhanging edge), near the front edge. On the table the load should be oriented so that handles are located on left and right sides relative to the user facing the load.

AVA Documents
Document Sharing Hub

Full document details: ASTM F3443-20

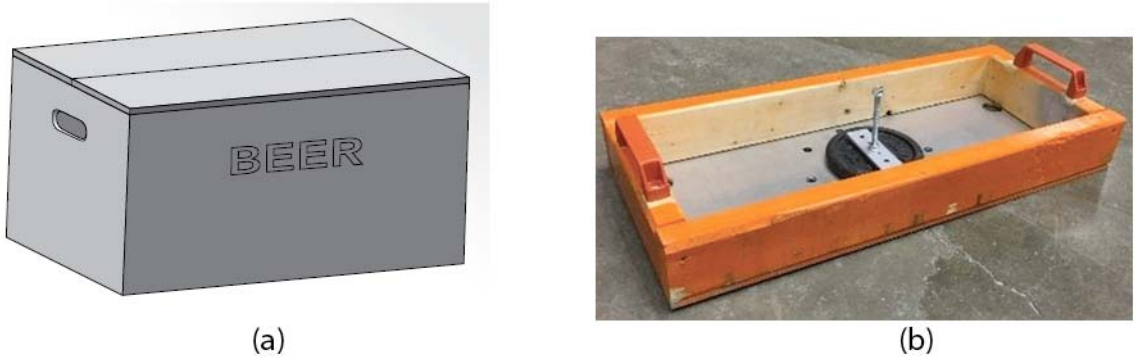

FIG. 10 (a) Real Load and (b) Artifact Load (with Added Weight to Match the Real Load) used for Example 1

7.3.1.8 The user should then return to a comfortable standing posture, facing the load with feet side-by-side and approximately shoulder-width apart.

7.3.1.9 No additional or special instructions are given to users.

7.3.1.10 Relevant photos of the environment, task, and load shall be attached.

7.3.1.11 Metrics are documented for the repetition.

7.3.1.12 The test is repeated 29 times (or as instructed by the test requestor).

7.3.2 *Example 1 with Obstacle Avoidance:*

7.3.2.1 The user performs the test in Example 1, although step 7.3.1.6 is changed to have the user maneuver around an obstacle placed in the path between the pallet and table. The obstacle location is measured from the pallet and table and shown on the layout drawing of the test space.

7.3.3 *Example 2—Force Bar Artifact (or a Real Cart):*

7.3.3.1 The user is instructed to push a cart, similar to the one shown in Fig. 11(a), that has been loaded with 1000 lbs. The user begins pushing at a start location on a straight path 20 ft and stops the cart at the goal location using both hands placed 36 in. apart measured between right and left index fingers. The cart has four 8-in. diameter polyurethane 85A wheels on a flat steel floor and is to be pushed at approximately 3 mph (4.4 fps). The total allowed time to move the cart from start to goal is 7 s.

7.3.3.2 The cart can be returned to the start position or use the goal as the next start position to repeat the test in the opposite direction.

7.3.3.3 Alternatively, a load bar artifact, as shown in Fig. 11(b), can be used in place of the cart. Similar loads and times as in step (1) are applied. The total forces are estimated at (see calculation formula in Appendix X4): rolling force = (0.047 × 500/4 = 5.9 lbs per wheel × 4 =) 23.5 lbs; starting force = rolling force × 2.5 = 58.8 lbs. Therefore, the test includes the following forces: *(a)* begin pushing (starting force) with a force of 58.8 lbs; *(b)* then apply a force of 23.5 lbs to roll the cart; and *(c)* then apply an opposing force (that is, pull) to stop the cart at the goal with a force of 58.8 lbs.

7.3.3.4 Metrics are documented for the repetition.

7.3.3.5 The test is repeated 29 times (or as instructed by the test requestor).

7.3.4 *Example 2 with Turns:*

7.3.4.1 Example 2 test is instead performed while maneuvering the cart around two obstacles in a "figure 8 pattern" where the cart must be rotated left and right to avoid the

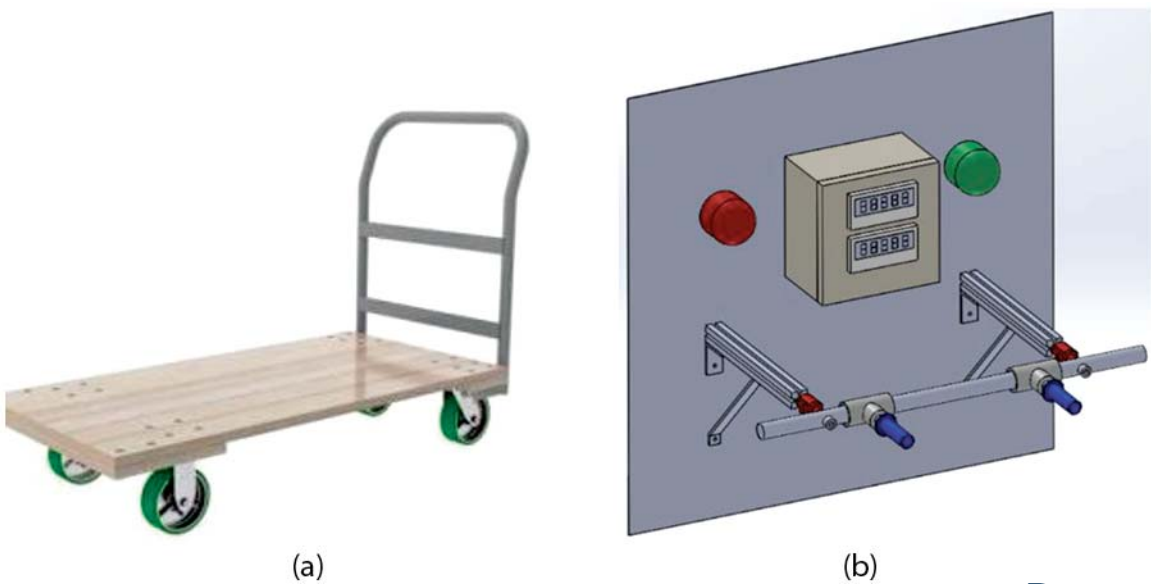

FIG. 11 (a) Real Cart Load and (b) Force Bar Artifact used for Example 2

Documents
Document Sharing Hub

Full document details: ASTM F3443-20

obstacles. Time to rotate the cart, the number and direction of cart turns, and other pertinent information about the test shall be recorded. If a force bar artifact is instead used as the load, right and left pull/push forces are to be instructed of and performed by the user using the artifact.

7.3.5 *Example 3—Flexible Load Artifact (or a Real, Charged Hose):*

7.3.5.1 A charged (filled with water), 4-in. diameter, fire-hose section, as shown in Fig. 12(a) is used as the load.

7.3.5.2 Alternatively, a flexible load artifact, as shown in Fig. 12(b) can be used in place of a real load. The artifact is configured with all links tightened to one another so that the artifact is rigid from end to end. The artifact configuration is specified by the test requestor to be curved with a chosen radius or straight. Each artifact link is filled with 5 lbs load (for example, water, sand, steel ball bearings) and sealed to ensure the load does not change.

7.3.5.3 The load is grabbed, lifted from the ground to the user's shoulder, and carried by the user from a start location 30 ft straight to a goal location in 5 s.

7.3.5.4 The load can be lifted and moved (that is, picked up and placed) simultaneously.

7.3.5.5 Metrics are documented for the repetition.

7.3.5.6 The test is repeated 29 times (or as instructed by the test requestor).

7.3.6 *Example 3 with Obstacle Avoidance:*

7.3.6.1 The user performs the test in Example 3, the user is instructed to maneuver around an obstacle placed in the path between the start and goal locations. The obstacle location is measured from the start and goal locations and shown on the layout drawing of the test space.

7.3.7 *Example 4—Tool Use:*

7.3.7.1 A series of five ½-in. – 13 × 1-in. long bolts are started into threaded holes spaced 2 in. apart in a metal plate (see Fig. 13) mounted at shoulder height to the user. Note, the bolt heights therefore vary from user to user depending on their shoulder heights.

7.3.7.2 A ½-in. socket torque wrench is grasped by the user who stands more than an arm length from the bolts ready to perform the test.

7.3.7.3 The user is instructed to begin tightening each of the five bolts to a tightened torque of 10 lbs.

7.3.7.4 Upon completion of all five bolts tightened to the requested torque, the user stops.

7.3.7.5 Metrics are documented for the repetition.

7.3.7.6 All bolts are reset as in step 7.3.7.1.

7.3.7.7 The test is repeated 29 times (or as instructed by the test requestor).

7.3.8 *Example 5—Load Cylinder Artifact (for example, carry on shoulder or lift like a bag with handles):*

7.3.8.1 A shoulder fired rocket launcher with rocket, as shown in Fig. 14(a), weighing 30 lbs is used as the load.

(a)

(b)

FIG. 12 (a) Real Charged Firehose Load and (b) Flexible Load Artifact used for Example 4

AVA Documents
Document Sharing Hub

Full document details: ASTM F3443-20