This international standard was developed in accordance with internationally recognized principles on standardization established in the Decision on Principles for the Development of International Standards, Guides and Recommendations issued by the World Trade Organization Technical Barriers to Trade (TBT) Committee.

Designation: F404 – 21

Standard Consumer Safety Specification for High Chairs[1]

This standard is issued under the fixed designation F404; the number immediately following the designation indicates the year of original adoption or, in the case of revision, the year of last revision. A number in parentheses indicates the year of last reapproval. A superscript epsilon (ε) indicates an editorial change since the last revision or reapproval.

INTRODUCTION

This consumer safety specification addresses high chair incidents that were identified by the U.S. Consumer Product Safety Commission (CPSC).

CPSC identified injuries to children associated with tray disengagement, falls resulting when children stood up on the seat of a high chair, entrapment between the tray and the seat, and tipover. By far the most common injury resulted from children falling when they were able to stand up on the seat of the high chair because they were not secured by the restraint system. In response to the incident data developed by the Commission, this consumer safety performance specification attempts to minimize the above listed problems.

This consumer safety performance specification does not cover high chairs that are either blatantly misused or are used in a careless manner that disregards the warnings and safety instructions that are provided with each high chair.

This consumer safety performance specification is written within the current state-of-the-art of high chair technology. It is intended that this specification will be updated whenever substantive information becomes available that necessitates additional requirements or justifies the revision of existing requirements.

1. Scope

1.1 This consumer safety specification covers the performance requirements and methods of test to ensure the satisfactory performance of the high chair and high chairs created by using a high chair conversion kit and component(s) from another product.

1.2 This consumer safety specification is intended to minimize injuries to children resulting from normal usage and reasonably foreseeable misuse or abuse of high chairs.

NOTE 1—This consumer safety specification is not intended to address accidents and injuries resulting from the interaction of older children with children in the high chair or the accidents resulting from abuse and misuse by persons over three years of age.

1.3 No high chair or high chair conversion kit produced after the approval date of this consumer safety specification shall, either by label or other means, indicate compliance with this specification unless it conforms to all requirements contained herein.

1.4 The values stated in inch-pound units are to be regarded as standard. The values given in parentheses are mathematical conversions to SI units that are provided for information only and are not considered standard.

1.5 The following precautionary caveat pertains only to the test methods portion, Section 7, of this specification: *This standard does not purport to address all of the safety concerns, if any, associated with its use. It is the responsibility of the user of this standard to establish appropriate safety, health, and environmental practices and determine the applicability of regulatory limitations prior to use.*

NOTE 2—This consumer safety specification includes the following sections:

Title	Section
Scope	1
Referenced Documents	2
Terminology	3
Calibration and Standardization	4
General Requirements	5
Compliance When Used With Conversion Kits	5.3
Threaded Fasteners	5.5
Latching or Locking Mechanisms	5.9
Labeling	5.10
Openings	5.11
Toys	5.12
Performance Requirements	6
Protective Components	6.1
Removable Tray or Front Torso Support Performance Integrity	6.2

[1] This consumer safety specification is under the jurisdiction of ASTM Committee F15 on Consumer Products and is the direct responsibility of Subcommittee F15.16 on Highchairs, Hook-On Chairs and Expandable Gates.

Current edition approved Nov. 15, 2021. Published January 2022. Originally approved in 1975. Last previous edition approved in 2020 as F404 – 20. DOI: 10.1520/F0404-21.

Copyright © ASTM International, 100 Barr Harbor Drive, PO Box C700, West Conshohocken, PA 19428-2959. United States

Documents
Document Sharing Hub
Full document details: ASTM F404-21

Tray or Front Torso Support Performance – Pull Test	6.3
Static Load	6.4
Stability	6.5
Exposed Coil Springs	6.6
Scissoring, Shearing, and Pinching	6.7
Restraint System	6.8
Passive Crotch Restraint System	6.9
Structural Integrity	6.10
Tray Latch Release Mechanisms	6.11
Side Containment	6.12
Protrusions	6.13
Test Methods	7
Locking Mechanisms	7.1
Protective Components	7.2
Tray or Front Torso Support – Drop Test	7.3
Tray or Front Torso Support Disengagement – Horizontal Pull Test	7.4
Tray or Front Torso Support Disengagement – Vertical Pull Test	7.5
Static Load Testing	7.6
Stability Testing	7.7
Restraint System Retention Test	7.8
Permanency of Labels and Warnings	7.9
Dynamic High Chair Test	7.10
Completely Bounded Openings	7.11
Tray Latch Release Mechanism – Accessibility	7.12
Side Containment Openings	7.14
Marking and Labeling	8
Instructional Literature	9
Keywords	10
Rationale	Appendix X1

1.6 *This international standard was developed in accordance with internationally recognized principles on standardization established in the Decision on Principles for the Development of International Standards, Guides and Recommendations issued by the World Trade Organization Technical Barriers to Trade (TBT) Committee.*

2. Referenced Documents

2.1 *ASTM Standards:*[2]

D3359 Test Methods for Rating Adhesion by Tape Test

F406 Consumer Safety Specification for Non-Full-Size Baby Cribs/Play Yards

F833 Consumer Safety Performance Specification for Carriages and Strollers

F963 Consumer Safety Specification for Toy Safety

2.2 *Federal Regulations:* [3]

16 CFR Part 1227 Safety Standard for Carriages and Strollers

16 CFR 1303 Ban of Lead-Containing Paint and Certain Consumer Products Bearing Lead-Containing Paint

16 CFR 1500 Hazardous Substances Act Regulations Including Sections:

16 CFR 1500.48 Technical Requirements for Determining a Sharp Point in Toys or Other Articles Intended for Use by Children Under Eight Years of Age

16 CFR 1500.49 Technical Requirements for Determining a Sharp Metal or Glass Edge in Toys or Other Articles Intended for Use by Children Under Eight Years of Age

16 CFR 1501 Method for Identifying Toys and Other Articles Intended for Use by Children Under Three Years of Age Which Present Choking, Aspiration, or Ingestion Hazards Because of Small Parts

2.3 *ANSI Standards:*[4]

ANSI Z535.1 Safety Colors

ANSI Z535.4 Product Safety Signs and Labels

ANSI Z535.6 Product Safety Information in Product Manuals, Instructions, and Other Collateral Materials

2.4 *Other References:*

CAMI Infant Dummy Mark II 17.5 lb (7.9 kg)[5]

CAMI Newborn Dummy 7.5 lb (3.4 kg)[6]

3. Terminology

3.1 *Definitions of Terms Specific to This Standard:*

3.1.1 *accessory, n*—component, included with a high chair or sold separately by the manufacturer of the high chair.

3.1.2 *conspicuous, adj*—visible, when the high chair is in all manufacturer's recommended use positions and an occupant is sitting in the high chair, to a person standing near the high chair at any one position around the high chair but not necessarily visible from all positions.

3.1.3 *double action release system, n*—a mechanism requiring either two consecutive actions, the first of which must be maintained while the second is carried out, or two separate and independent simultaneous actions to fully release.

3.1.4 *fabric, n*—any woven, knit, coated, laminated, extruded, or calendared flexible material which is intended to be sewn, welded, heat sealed, or glued together as an assembly.

3.1.5 *flexible passive crotch restraint, n*—a passive crotch restraint made of flexible material, such as fabric or webbing.

3.1.6 *front torso support, n*—a barrier extending horizontally across the seat of the high chair that is the primary support intended to restrict forward movement of the occupant's torso when the tray is removed and creates a completely or partially bounded opening in front of the occupant.

3.1.7 *high chair, n*—a free-standing chair for a child up to 3 years of age which has a seating surface more than 15 in. (38.1 cm) above the floor and elevates the child normally for the purposes of feeding or eating.

3.1.7.1 *Discussion*—A high chair may be sold with or without a tray and may be height adjustable to higher or lower use positions. It may also include a recline position for infants not able to sit up unassisted.

[2] For referenced ASTM standards, visit the ASTM website, www.astm.org, or contact ASTM Customer Service at service@astm.org. For *Annual Book of ASTM Standards* volume information, refer to the standard's Document Summary page on the ASTM website.

[3] Available from U.S. Government Printing Office Superintendent of Documents, 732 N. Capitol St., NW, Mail Stop: SDE, Washington, DC 20401.

[4] Available from American National Standards Institute (ANSI), 25 W. 43rd St., 4th Floor, New York, NY 10036, http://www.ansi.org.

[5] Available from Department of Transportation Memorandum Report AAC-119-74-14, Revision II, Drawing No. SA-1001 by Richard Chandler, July 2, 1974. Federal Aviation Administration, Civil Aeromedical Institute, Protection and Survival Laboratory, Aeromedical Center, Oklahoma City, OK 73125.

[6] Drawing numbers 126-0000 through 126-0015 (sheets 1 through 3), 126-0017 through 126-0027, a parts list entitled "Parts List for CAMI Newborn Dummy," and a construction manual entitled, "Construction of the Newborn Infant Dummy" (July 1992). Copies of the materials may be inspected at NHTSA's Docket Section 400 Seventh Street, SW, Room 5109, Washington, DC, or at the Office of the Federal Register, 800 North Capitol Street, NW, Suite 700, Washington, DC.

AVA Documents
Document Sharing Hub

Full document details: ASTM F404-21

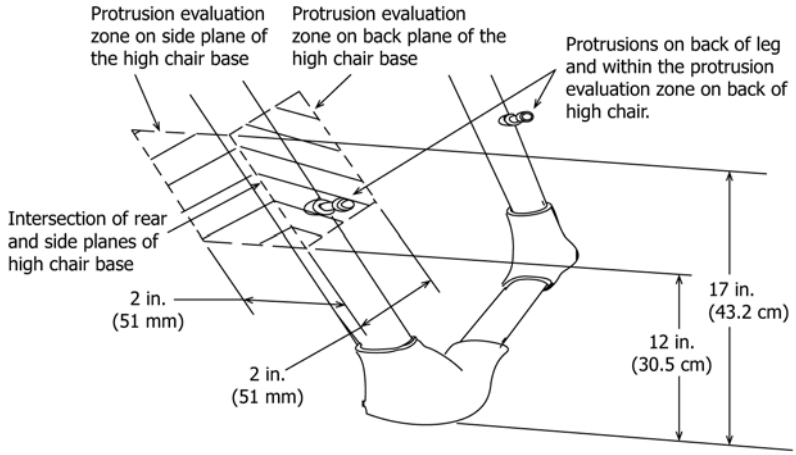

FIG. 1 Protrusion Evaluation Zones

3.1.7.2 *Discussion*—Products, for use in the home, that include a means to elevate the seat more than 15 in. above the floor and promote their use for feeding or eating in any use mode using words or graphics, including showing use of the product near a dining table, are considered a high chair in those use modes. Products, such as youth chairs, which have a restraint system accessory available that convert the product into a high chair for use under 3 years of age are considered a high chair when used in the use mode with the restraint system.

3.1.8 *high chair conversion kit, n*—an accessory or component sold by the manufacturer of a product or high chair and used to convert or modify a product so that it can be used as a high chair.

3.1.9 *key structural elements, n*—sub-assemblies such as seat assemblies, leg assemblies, base assemblies, or individual components such as footrests, stabilizing bars, front torso supports, passive crotch restraints, or other components designed to support the weight of the occupant, or a combination thereof.

3.1.10 *latch release surface, n*—any surface on the tray latch release mechanism that results in the tray releasing from its adjustment position when a force is applied perpendicular to that surface.

3.1.11 *manufacturer's recommended use position, n*—any position that is presented by the manufacturer in any descriptive or instructional literature as a normal, allowable, or acceptable configuration for the use of the product. This specifically excludes positions which the manufacturer shows in a like manner in its literature to be unacceptable, unsafe, or not recommended.

3.1.12 *nonpaper label, n*—any label material (such as plastic or metal) that either will not tear without the aid of tools or tears leaving a sharply defined edge or labels made from fabric.

3.1.13 *occupant, n*—that individual who is in a product in one of the manufacturer's recommended use positions.

3.1.14 *paper label, n*—any label material (except fabric) that tears without the aid of tools and leaves a fibrous edge.

3.1.15 *passive crotch restraint, n*—a component that separates the openings for the legs of the occupant into two separate bounded openings and requires no action on the part of the caregiver to use except to position one leg into each opening created by the component.

3.1.16 *protective component, n*—any component used for protection from sharp edges, points, or entrapment of fingers or toes.

3.1.16.1 *Discussion*—Examples of protective components include caps, sleeves, and plugs.

3.1.17 *protrusion, n*—a rigid projection that is elevated above the immediately adjacent surface.

3.1.18 *protrusion evaluation zone, n*—areas on the exterior planes of the high chair base at the rear corners which are within 2 in. from the corners formed by the intersection of the rear and side planes of the base and are located between 12 in. and 17 in. above the floor. See Fig. 1.

3.1.18.1 *Discussion*—This does not include surfaces inside the exterior plane of the high chair base.

3.1.19 *seam, n*—means of joining fabric components such as sewing, welding, heat sealing or gluing.

3.1.20 *seating surface, n*—seat support surface for the occupant that exists between the side surfaces, seat back surface, and the INNER SURFACE of the passive crotch restraint.

3.1.20.1 *Discussion*—For seats with open sides, the seat side surfaces are defined by a vertical plane tangent to the inside surface of the high chair armrest.

3.1.21 *static load, n*—vertically downward load applied by weights or other means.

3.1.22 *tether, n*—a means of attaching a component using flexible plastic, webbing, or cord.

3.1.23 *threaded fastener, n*—a discrete piece of hardware that has internal or external screw threads which are used for the assembly of multiple parts and facilitate disassembly.

3.1.24 *top corner, n*—an edge on the top side of the upper section of a protrusion created by the intersection of two surfaces that intersect at an angle less than 180°. See Fig. 2.

AVA Documents
Document Sharing Hub

Full document details: ASTM F404-21

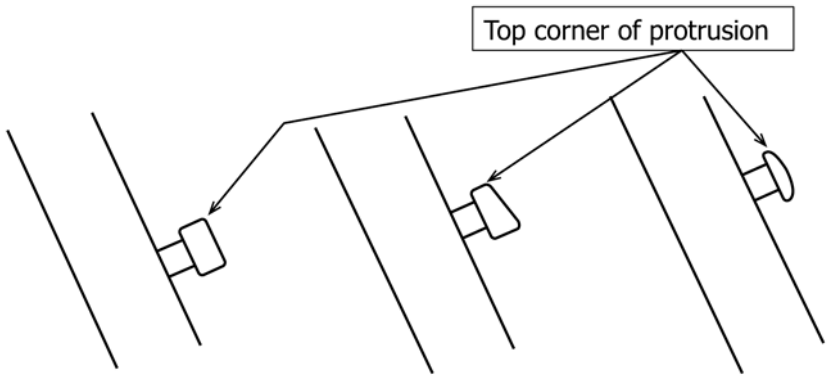

FIG. 2 Protrusion Examples

3.1.25 *tray latch release mechanism, n*—mechanism for releasing the latch that secures a tray onto a high chair or into an adjustment position, or both.

4. Calibration and Standardization

4.1 All testing shall be conducted on a concrete floor that may be covered with ⅛-in. (3-mm) thick vinyl flooring cover, unless test instructs differently.

4.2 The high chair shall be completely assembled, unless otherwise noted, in accordance with the manufacturer's instructions.

4.3 No testing shall be conducted within 48 h of manufacturing.

4.4 The product to be tested shall be in a room with an ambient temperature of 73 °F ± 9 °F (23 °C ± 5 °C) for at least 1 h prior to testing. Testing shall then be conducted within this temperature range.

5. General Requirements

5.1 For products sold as a high chair, all components necessary for a high chair to comply with the requirements of this standard must be included when shipped from the manufacturer in the package with the product or one of the packages if multiple packages are used.

5.2 For high chair conversion kits sold separately or included with a product to convert a product into a high chair, all components necessary to comply with this standard must be included when shipped from the manufacturer in the package with the product or the conversion kit, or both, or one of the packages if multiple packages are used.

5.3 *Compliance When Used With Conversion Kits:*

5.3.1 When a conversion kit is used to convert a high chair to a different product which falls under the scope of another ASTM standard, it shall comply with the applicable requirements of that standard.

5.4 The high chair with any accessory(s) included or any accessories sold by the manufacturer of the high chair for use with the specific high chair model being tested shall, when installed in a manufacturer's recommended use position in accordance with the manufacturer's instructions, comply with the requirements of this standard.

NOTE 3—Any accessory included with the high chair which per the manufacturer's instructions is for use only when the high chair is converted into another product, are exempt from the requirement in 5.4.

5.5 *Threaded Fasteners:*

5.5.1 *Wood Screws and Sheet Metal Screws:*

5.5.1.1 Wood screws and sheet metal screws shall not be used by the manufacturer in the assembly of key structural elements of a high chair or other components that must be removed by the consumer in the disassembly of a high chair or conversion to a different use mode per the manufacturer's instructions.

NOTE 4—Wood screws are permitted to be used as the primary fasteners or only fasteners when used to secure components or assemblies that are not key structural elements.

5.5.1.2 No high chair shall require consumer assembly of key structural elements using wood screws or sheet metal fasteners directly into wood components.

5.5.1.3 Factory assembly using wood screws on key structural elements is allowed if the wood screws are a second method of attachment or the wood screws include a lock washer, glue or other means to impede loosening or detachment.

5.5.1.4 Metal inserts, with external wood screw threads for screwing into a wood component and providing internal machine threads to accommodate a machine screw, that are used to secure key structural elements shall be glued or include other means to impede loosening or detaching.

5.5.2 Metal threaded fasteners, such as sheet metal screws and machine screws, secured into metal components and used to attach key structural elements shall have lock washers, self-locking nuts, or other means to impede loosening as defined in 6.10.1.5 or detachment during the testing required by this specification.

5.6 There shall be no hazardous sharp edges or points as defined by 16 CFR 1500.48 and 16 CFR 1500.49 before or after testing in accordance with this consumer safety specification.

5.7 There shall be no small parts, as defined by 16 CFR 1501, before testing or liberated as a result of testing to this specification.

5.8 Before the application of any test methods, any exposed wood parts shall be smooth and free of splinters.

AVA Documents
Document Sharing Hub

Full document details: ASTM F404-21

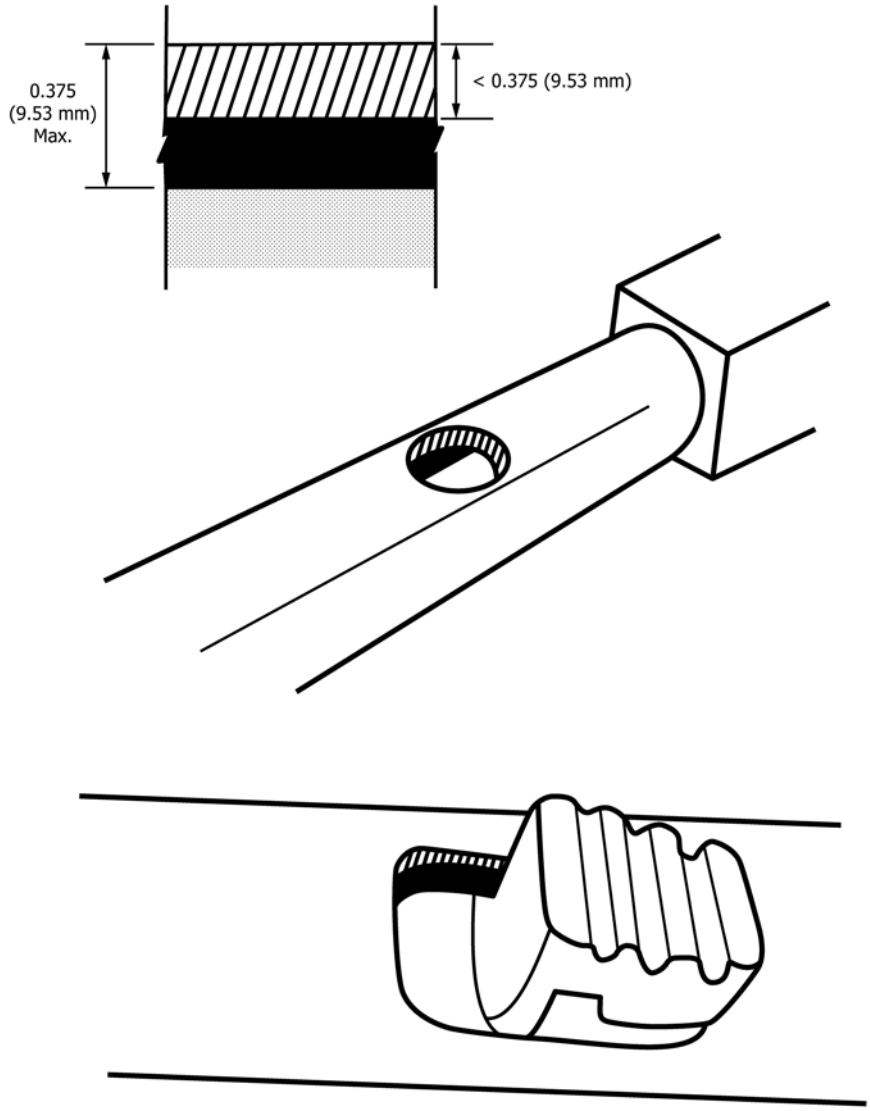

FIG. 3 Opening Example

5.9 *Latching or Locking Mechanisms*—Any unit that folds shall have a latching or locking device or other provision in a design that will prevent the unit from unintentionally folding when properly placed in the manufacturer's recommended use position. During and upon completion of the testing in accordance with 7.1, the unit shall remain in its manufacturer's recommended use position. If a unit is designed with a latching or locking device, that device shall remain engaged and operative after testing.

5.10 *Labeling:*

5.10.1 Warning labels, whether paper or non-paper, shall be permanent when tested per 7.9.1 – 7.9.3.

5.10.2 Warning statements applied directly onto the surface of the product by hot stamping, heat transfer, printing, wood burning, etc. shall be permanent when tested per 7.9.4.

5.10.3 Non-paper labels shall not liberate small parts when tested in accordance with 7.9.5.

5.11 *Openings*—Holes or slots that extend entirely through a wall section of any rigid material less than 0.375 in. (9.53 mm) thick and admit a 0.210-in. (5.33-mm) diameter rod shall also admit a 0.375-in. (9.53-mm) diameter rod. Holes or slots that are between 0.210 in. and 0.375 in. (5.33 mm and 9.53 mm) in diameter and have a wall thickness less than 0.375 in. (9.53 mm), but are limited in depth to 0.375 in. (9.53 mm) maximum by another rigid surface shall be permissible (see Fig. 3). The product shall be evaluated in all manufacturer's recommended use positions.

5.12 *Toys*—Toy accessories attached to, removable from, or sold with a high chair or high chair accessory, as well as their means of attachment, shall comply with the applicable requirements of Consumer Safety Specification F963.

5.13 All paints and surface coatings on the product shall comply with 16 CFR 1303.

AVA Documents
Document Sharing Hub

Full document details: ASTM F404-21

5.14 Product must comply with the applicable requirements of the Consumer Product Safety Improvement Act (CPSIA).

6. Performance Requirements

NOTE 5—The loading in this section may be simplified by the use of a simple test frame that will permit the loads to be applied by dead weights operating over a ball bearing pulley through a rope. Vertical force tests are greatly aided with the use of an overhead pulley.

6.1 *Protective Components*—If the child can grasp protective components between the thumb and forefinger, or teeth, or if there is at least a 0.04-in. (1.0-mm) gap between the component and its adjacent parent component, such component shall not be removed when tested in accordance with 7.2. All protective components that are accessible to a child sitting in the high chair or accessible to a child from any position around the high chair shall be evaluated.

6.2 *Removable Tray or Front Torso Support Performance Integrity*—All removable trays and front torso supports shall remain functional with respect to the chair and exhibit no sharp points, sharp edges, or small parts when subjected to a drop test in accordance with 7.3. A tray or front torso support is considered removable if it can be removed from the high chair without the use of tools (for example, screw driver or wrench).

6.3 *Tray or Front Torso Support Performance – Pull Test*—The tray or front torso support shall not become disengaged or dislocated from its original adjustment position, when tested in accordance with 7.4 and 7.5. Components that do not function as a front torso support such as trays, tray inserts, or snack trays are exempt from this requirement.

6.4 *Static Load*—A chair shall support static loads without causing any hazardous conditions as identified within this consumer safety specification. Tests shall be conducted in accordance with 7.6.

6.5 *Stability:*

6.5.1 High chairs and high chair accessories that have adjustment positions that, per the manufacturer's instructions, are recommended for use only for children able to sit upright unassisted (approximately 6 months of age) or weighing more than 20 lb (9.1 kg) shall comply with 6.5.1.1 to 6.5.1.3 in all those manufacturer's recommended use and adjustment positions.

6.5.1.1 *Forward and Sideways Stability*—A high chair shall not tip over when setup as defined in 7.7.2.1 – 7.7.2.4, and then tested in accordance with 7.7.2.5 and 7.7.2.6.

6.5.1.2 *Rearward Stability*—When setup as defined in 7.7.2.1 – 7.7.2.4, and then tested in accordance with 7.7.2.7, the high chair shall have a Rearward Stability Index of 50 or more.

6.5.1.3 *Stability with Child Climbing into Chair*—A high chair shall not tip over when tested in accordance with 7.7.4.

6.5.2 High chairs and high chair accessories that have adjustment positions that are manufacturer's recommended use positions for use with children who are unable to sit upright unassisted (birth to approximately 6 months of age) or weigh 20 lb (9.1 kg) or less, when adjusted into the most onerous manufacturer's recommended use and/or adjustment position for each direction to be tested, shall not tip over and shall retain the CAMI dummy when tested in accordance with 7.7.3 in the forward, rearward, and sideways directions.

6.6 *Exposed Coil Springs*—Any exposed coil spring which is accessible to the occupant, having or capable of generating a space between coils of 0.210 in. (5.3 mm) or greater during static load testing in accordance with 7.6 shall be covered or otherwise designed to prevent injury from entrapment.

6.7 *Scissoring, Shearing, and Pinching*—The high chair, when in the manufacturer's recommended use position(s), shall be designed and constructed so as to prevent injury to the occupant from any scissoring, shearing, or pinching when members or components rotate about a common axis or fastening point, slide, pivot, fold, or otherwise move relative to one another. Scissoring, shearing, or pinching that may cause injury exists when the edges of the rigid parts admit a probe greater than 0.210 in. (5.33 mm) and less than 0.375 in. (9.53 mm) in diameter at any accessible point throughout the range of motion of such parts.

NOTE 6—The requirement for scissoring, shearing, and pinching in 6.7 above does not apply to components of the high chair that either (*1*) can be adjusted, installed, or removed by the caregiver while the occupant is in the high chair or (*2*) do not move relative to one another when the high chair is in the manufacturer's recommended use position(s).

6.8 *Restraint System:*

6.8.1 A restraint system shall be provided to secure a child in the seated position in any of the manufacturer's recommended use positions.

6.8.1.1 The restraint system shall include both waist and crotch restraint designed such that the crotch restraint's use is mandatory when the restraint system is in use.

6.8.2 The restraint system and its closing means (for example, buckle) shall not break, separate, or permit removal of the CAMI test dummy from the high chair when tested in accordance with 7.8.

6.8.2.1 If during test in 7.8.5.1, the posterior of the test dummy is pulled past the front edge of the seat, the dummy shall be considered removed.

6.8.2.2 If during test in 7.8.5.3, the dummy with the force applied reaches a vertical position with the bottom of its feet touching or off the seat, the dummy shall be considered removed.

6.8.3 The waist restraint shall be capable of adjustment with a positive, self-locking mechanism that is capable, when locked, of withstanding the forces of tests in 7.8 without allowing restraint movement or slippage of more than 1 in. (25.4 mm).

6.8.4 A connecting means and adjustment means for the waist restraint shall be capable of usage independent of one another. The connecting means shall not be an adjustment means but may have one integrally attached to it.

6.8.5 The restraint system anchorages shall not separate from their attachment points when tested in accordance with 7.8.6.

6.8.6 Before shipment, the restraint system should be completely attached to the high chair in the location for use in at least one of the manufacturer's recommended use position(s) and in such a manner as to not become detached through normal use.

AVA Documents
Document Sharing Hub

Full document details: ASTM F404-21

6.9 Completely bounded openings forward of the occupant shall comply with 6.9.1 and 6.9.2.

6.9.1 Completely Bounded Leg Openings forward of the occupant that include a Passive Crotch Restraint:

6.9.1.1 High chairs that have completely bounded leg openings forward of the occupant in any position shall also have a passive crotch restraint which complies with 6.9.1.2, 6.9.1.3, and 6.9.1.4 in all such positions.

6.9.1.2 There shall be no vertical gap between the passive crotch restraint and either the tray, front torso support, or seating surface that allows free passage of a 1.5-in. (38-mm) diameter by 3-in. (76-mm) long rod from one leg opening to the other.

6.9.1.3 Adjust the seat back to the most upright position and the passive crotch restraint to the position furthest from the seat back. The distance between the front surface of the noncompressed seat back and the passive crotch restraint shall be less than 8.5 in. (216 mm) when measured horizontally 2.0 in. (50 mm) above the lowest point on the noncompressed seating surface.

6.9.1.4 The leg openings on each side of the passive crotch restraint shall not allow complete passage of the wedge block when tested in accordance with 7.11.

NOTE 7—A passive crotch restraint does not meet the restraint system requirement of 6.8.1.1, which requires a crotch restraint as part of the restraint system.

6.9.1.5 A passive crotch restraint, except a flexible passive crotch restraint addressed in 6.9.1.5*(1)* or a passive crotch restraint per 6.9.1.5*(2)*, shall be permanently attached to the high chair or tray before shipment such that it cannot be removed without the use of a tool. Permanent attachment requires either attachment in a manufacturer's recommended use position or attachment to the high chair or tray, including attachment by a tether, in a manufacturer's recommended use position, that requires some repositioning or final assembly, or both, by the end user, and the assembly can be completed without removal of the tether. In the case of a tether, the total exposed length of flexible material when measured in accordance with 7.15 shall be less than 7.4 in. (188 mm).

(1) A flexible passive crotch restraint shall be permanently attached to the high chair in the manufacturer's recommended use position such that it cannot be removed without the use of a tool.

(2) A passive crotch restraint that comes with a high chair or sold separately as an accessory shall be exempt from the assembly requirements in 6.9.1.5 if the tray and passive crotch restraint comply with both 6.9.1.5*(2)(a)* and 6.9.1.5*(2)(b)*.

(a) The passive crotch must be assembled to the chair in order to attach a tray to the high chair.

(b) The passive crotch restraint must be assembled to the high chair for the passive crotch restraint and tray to create completely bounded openings forward of the occupant.

6.9.2 Completely bounded openings forward of the occupant that do not include a passive crotch restraint:

6.9.2.1 Completely bounded openings between the tray and other structural elements that are located forward of the occupant shall not allow complete passage of the wedge block when tested in accordance with 7.11.

6.10 *Structural Integrity:*

6.10.1 During and upon completion of the testing in accordance with 7.10, the high chair shall comply with all of the following:

6.10.1.1 The high chair shall not exhibit an instantaneous change in the height of the occupant seating surface above the floor of more than 3 in. (75 mm) during one cycle of the weight drop. During and after a change in the height of the seating surface, the high chair must comply with the requirements for openings as defined in 6.6 and scissoring, shearing, and pinching as defined in 6.7.

6.10.1.2 There shall be no breakage of any structural component.

6.10.1.3 Latching or locking devices which prevent folding of the high chair shall remain engaged.

6.10.1.4 The angle of the occupant seating surface relative to the floor shall not change more than 10°.

6.10.1.5 After testing in accordance with the procedure in 7.10, threaded fasteners that are used for key structural elements shall not have separated by more than 0.04 in. (1.00 mm) upon completion of testing.

6.11 *Tray Latch Release Mechanisms:*

6.11.1 High chairs that have completely bounded leg openings in front of the occupant, on each side of a passive crotch restraint, when the tray is removed are exempt from the following tray latch release mechanism requirements.

6.11.2 Tray latch release mechanisms located on the front of the tray or forward of the occupant shall comply with 6.11.2.1 or 6.11.2.2 or 6.11.2.3. Tray latch release mechanisms which only allow for a change in adjustment position of the tray and do not allow the tray to be detached from any attachment point to the high chair and trays on high chairs with a front torso support are exempt from the requirements in this section.

6.11.2.1 Latch release surfaces on a tray latch release mechanism shall be inaccessible by the foot of the occupant as defined in Item 1 (below) or comply with Item 2.

(1) The bottom surface of the leg/foot probe assembly, Fig. 4, shall not contact any latch release surface on the tray latch release mechanism when tested per 7.12.1.

(2) If a latch release surface is contactable by the bottom of the foot on the leg/foot probe assembly, the angle between Plane "A" on the foot and Plane "B" at the lower end of the leg when tested per 7.12.2 shall be 30° or greater (see Fig. 5).

6.11.2.2 The direction to actuate the tray latch release mechanism must push toward the occupant.

6.11.2.3 The tray latch release mechanism is a double action release system.

6.11.3 Tray latch release mechanisms located at the side of a tray shall comply with 6.11.3.1, 6.11.3.2, 6.11.3.3, or 6.11.3.4.

6.11.3.1 For single action tray latch release mechanisms, the tray shall not become detached from the high chair in any latching position when tested in accordance with 7.13. A change in the adjustment position of the tray is allowed provided that the tray cannot be detached from either side of the high chair.

AVA Documents
Document Sharing Hub

Full document details: ASTM F404-21

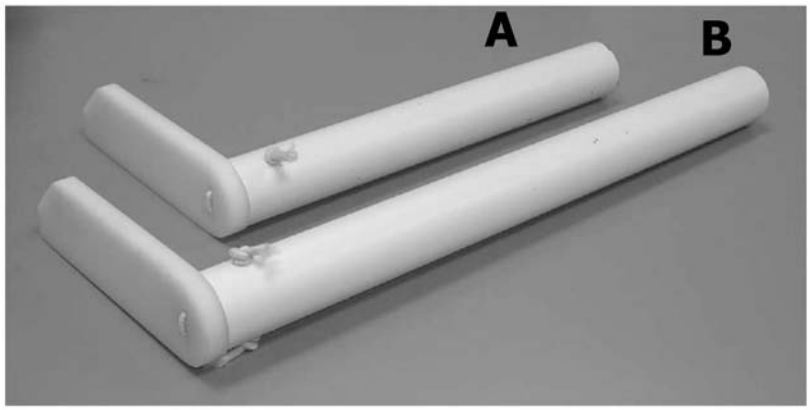

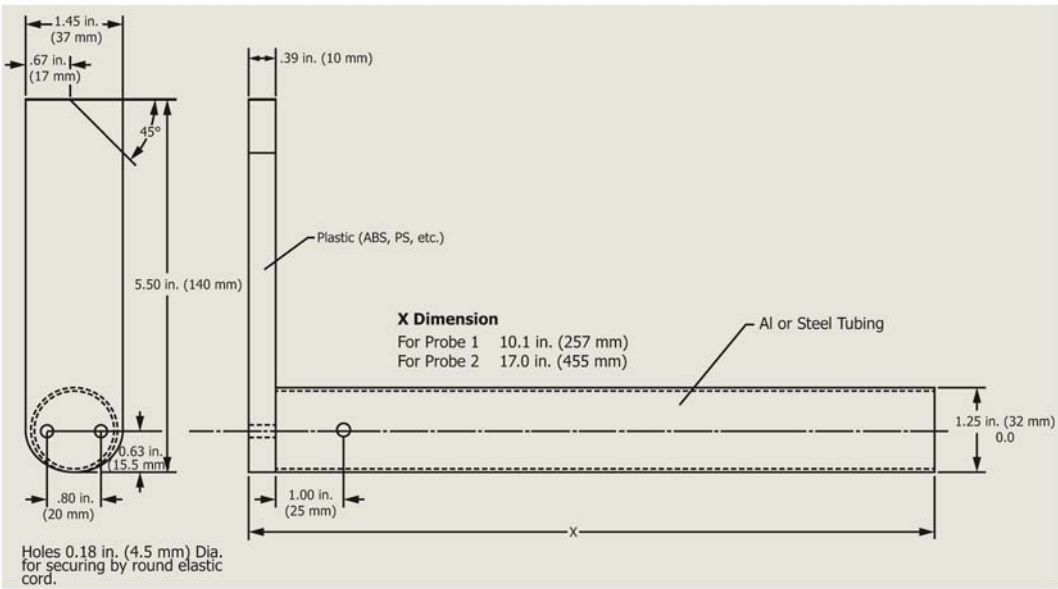

NOTE 1—Leg/Foot Size Rationale:
Foot Breadth = 1.5 in. (37 mm) (6 to 8 month 95th percentile)
Foot Length = 5.5 in. (140 mm) (20 to 23 month 95th percentile)
Foot Height = 0.39 in. (10 mm)
Leg Length A (Rump to Sole) = 10.1 in. (257 mm) (6 to 8 month 5th percentile)
Leg Length B (Rump to Sole) = 17.9 in. (455 mm) (20 to 23 month 95th percentile)
Ankle Breadth = 1.22 in. (31 mm) (8 month 5th percentile – tube diameter)

NOTE 2—Foot dimensions are very close to the probe used in EN1930 (Template for Footholds) 1.4 by 4.7 by 0.39 in. (35 by 120 by 10 mm).

FIG. 4 Leg/Foot Probe

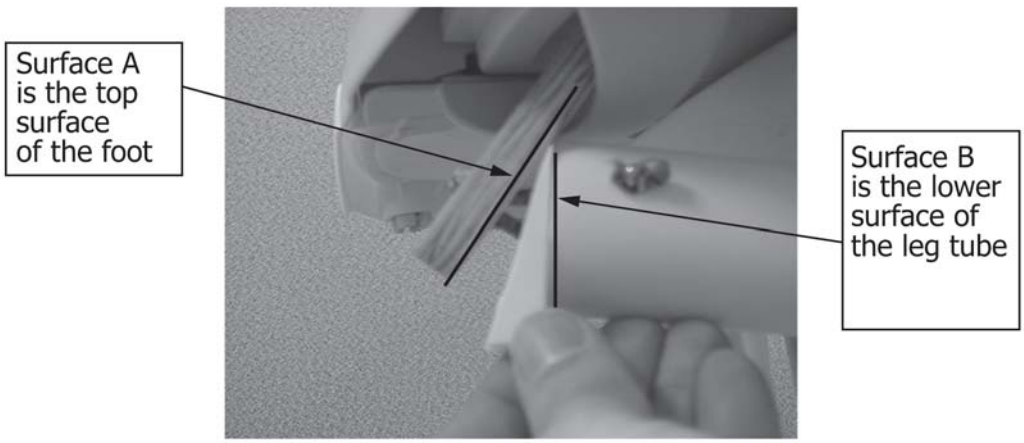

FIG. 5 30° Angle Block

AVA Documents
Document Sharing Hub

Full document details: ASTM F404-21

6.11.3.2 Each tray latch release mechanism shall be a double action release system. For purposes of this requirement, each tray latch release mechanism is to be considered independently.

6.11.3.3 Two or more tray latch release mechanisms are interdependent such that the tray cannot be fully released from either side of the high chair without actuating at least two tray latch release mechanisms. The interconnection must require either two consecutive actions, the first of which must be maintained while the second is carried out or two separate and independent actions that must be carried out simultaneously to fully release the tray. An attempt to actuate any one of the tray latch release mechanisms independently shall not allow either side of the tray to fully release from the high chair.

6.11.3.4 Tray latch release mechanism shall not be visible to the occupant and the direction of release mechanism must be no less than 85° from the direction of tray release or removal. Visibility is to be determined when the seat is in the upright position and tray is in any manufacturer's use position. A tray latch release mechanism is considered not visible to the occupant if the latch is flush to or recessed back from the plane perpendicular to the outer edge of the tray in the area of the tray latch release mechanism.

6.12 *Side Containment*—Completely bounded openings in the surfaces that act as the sides of the seating area that are below the top surface of the tray and above the seat bottom surface shall not allow complete passage of the wedge block when tested in accordance with 7.14.

6.13 *Protrusions*—Each protrusion that is completely contained within the protrusion evaluation zone and on a surface that is angled out from the seating area between 20° and 30° from the vertical when in one of the manufacturer's recommended use positions per 7.16 shall comply with either 6.13.1 or 6.13.2.

6.13.1 The protrusion shall not have an undercut below its top surface (for example, rivets, latch tabs, tray storage hooks).

6.13.2 A protrusion with an undercut below its top surface (for example, rivets, latch tabs, tray storage hooks) shall meet either 6.13.2.1 or 6.13.2.2.

6.13.2.1 The top corner of a protrusion shall not protrude farther than the thickness of the ring gauge (Fig. 6) when tested per 7.16, 7.16.1, and 7.16.3.

6.13.2.2 The top corner of a protrusion shall not be contactable by the protrusion accessibility gauge (Fig. 7) when tested per 7.16, 7.16.2, and 7.16.3.

7. Test Methods

NOTE 8—All wood blocks are fabricated from 1 in. (25 mm) nominal thickness lumber having a finished thickness of ¾ in. (19 mm) unless otherwise specified.

7.1 *Locking Mechanisms (see 5.9):*

7.1.1 Erect the high chair in accordance with the manufacturer's instructions.

7.1.2 Secure the chair so that the normal folding motion is not impeded.

7.1.3 Apply a force of 45 lbf (200 N) to the high chair in the direction normally associated with folding the high chair. Apply the force on a 2 by 2-in. (50 by 50-mm) wood block at the location deemed the most likely to cause failure. Apply the force gradually over a 5 s period and maintain for an additional 10 s before releasing the force.

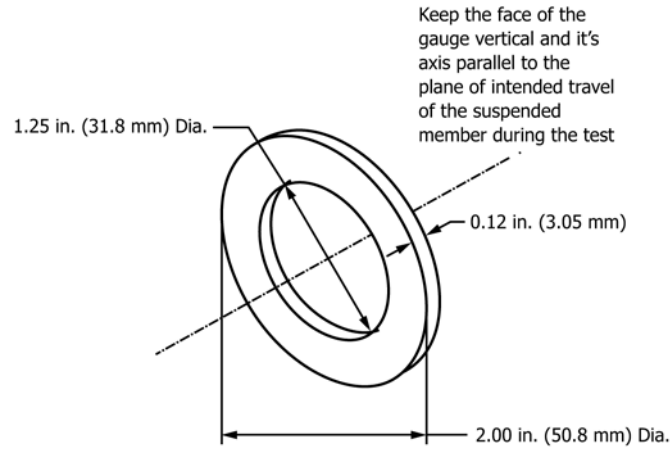

NOTE: Gauge made of any rigid material.

FIG. 6 Ring Gauge

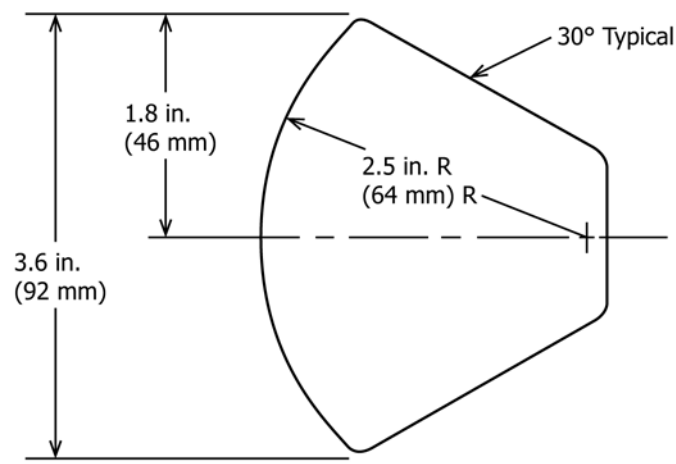

FIG. 7 Protrusion Accessibility Gauge

7.1.4 Perform this procedure five times within a 2 min period.

7.2 *Removal of Protective Components Test (see 6.1):*

7.2.1 Any protective component shall be tested in accordance with each of the following methods in the sequence listed.

7.2.2 Secure the high chair so that it cannot move during the performance of the following tests.

7.2.3 *Torque Test*—Apply a torque of 4 lbf·in. (0.5 N·m) gradually within a period of 5 s in a clockwise direction until a rotation of 180° from the original position has been attained or 4 lbf·in. (0.5 N·m) has been reached. Maintain the torque or maximum rotation for an additional 10 s. Then remove the torque and permit the test components to return to a relaxed condition. Then repeat this procedure in the counter clockwise direction.

7.2.4 *Tension Test:*

7.2.4.1 Attach a force gauge to the protective component by means of any suitable device. For components that cannot

AVA Documents
Document Sharing Hub

Full document details: ASTM F404-21