NOTICE: This standard has either been superseded and replaced by a new version or withdrawn.
Contact ASTM International (www.astm.org) for the latest information

Designation: F 431 – 04

An American National Standard

Standard Specification for Air Performance Measurement Plenum Chamber for Vacuum Cleaners[1]

This standard is issued under the fixed designation F 431; the number immediately following the designation indicates the year of original adoption or, in the case of revision, the year of last revision. A number in parentheses indicates the year of last reapproval. A superscript epsilon (ϵ) indicates an editorial change since the last revision or reapproval.

1. Scope

1.1 This specification covers the acceptable details and tolerances for the plenum chamber used in specified air performance measurement tests for vacuum cleaners.

1.2 The plenum chamber is designed for vacuum measurements only. (**Warning—**The plenum chamber has been shown to accurately determine maximum air power values at various test points for vacuum cleaners. There is a possibility that the airflow values measured with orifices larger than 2 in. at high flow rates may be erroneous due to the proximity of the top and bottom surfaces to the orifice plate inlet.)

1.3 The foot-pound, inch system of units is used in this standard. The values in parentheses are given for information only.

2. Referenced Documents

2.1 *ASTM Standards:* [2]

F 558 Test Method for Measuring Air Performance Characteristics of Vacuum Cleaners

F 820 Test Method for Measuring Air Performance Characteristics of Central Vacuum Cleaning Systems

2.2 *ASTM Adjunct:*

Orifice Plate Holder Details (F 431) [3]

3. Details

3.1 Plenum chambers conforming to this specification shall be fabricated in accordance with the dimensions, tolerances, and notes shown in the following figures:

3.1.1 Plenum chamber assembly, see Fig. 1.

3.1.2 Orifice plate detail, see Fig. 2.

3.1.3 Orifice plate holder and assembly, see Fig. 3.

3.2 Manometer connection detail, see Fig. 1(f), Note 17.

4. Orifice Plates

4.1 Orifice plates conforming to this specification shall be fabricated in accordance to the dimensions, tolerances, and notes shown in the following figure:

4.1.1 Orifice plate dimensional detail, see Fig. 2(a).

4.1.2 Acceptable machined edges for orifice plates, see Fig. 2(b).

5. Keywords

5.1 air performance; orifice plate; plenum chamber; vacuum cleaner

[1] This specification is under the jurisdiction of ASTM Committee F11 on Vacuum Cleaners and is the direct responsibility of Subcommittee F11.22 on Air Performance.

Current edition approved Aug. 1, 2004. Published August 2004. Originally approved in 1975. Last previous edition approved in 2003 as F 431 – 03.

[2] For referenced ASTM standards, visit the ASTM website, www.astm.org, or contact ASTM Customer Service at service@astm.org. For Annual Book of ASTM Standards volume information, refer to the standard's Document Summary page on the ASTM website.

[3] Available from ASTM International Headquarters. Order Adjunct No. ADJF4031.

Copyright © ASTM International, 100 Barr Harbor Drive, PO Box C700, West Conshohocken, PA 19428-2959, United States.

Documents
Document Sharing Hub
Full document details: ASTM F431-04

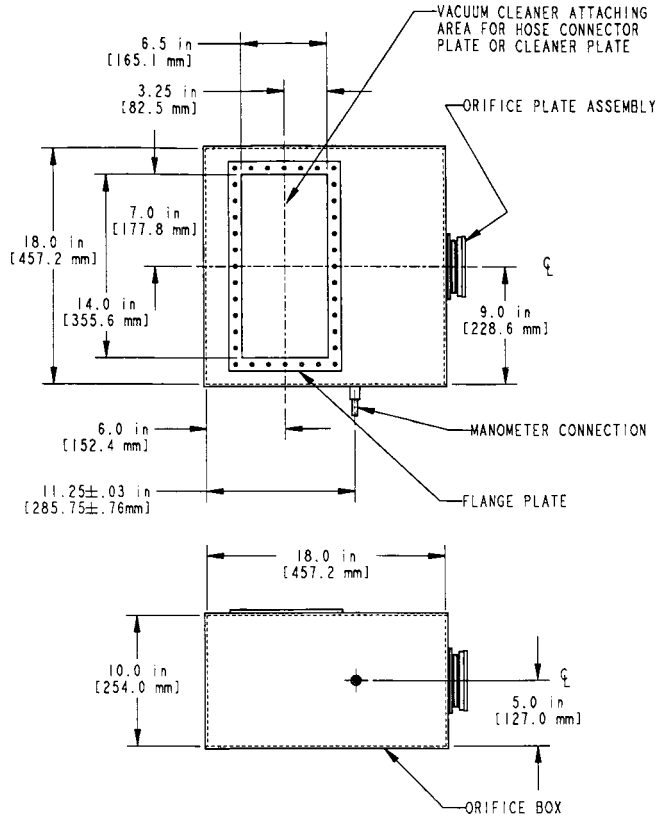

FIG. 1 (a) Plenum Chamber (Material: see Note 8)

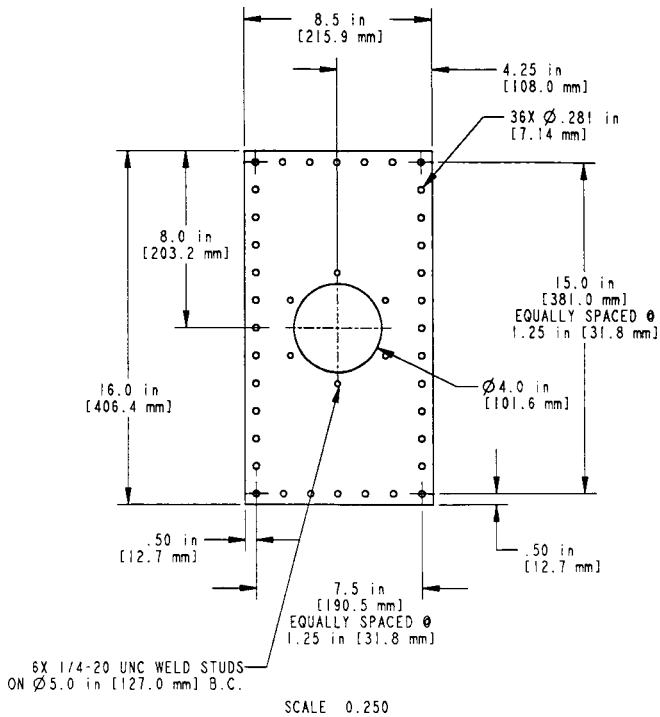

FIG. 1 (b) Hose Connector Plate (Material: 0.250-in. (6.35-mm) Steel) *(continued)*

Documents
Document Sharing Hub
Full document details: ASTM F431-04

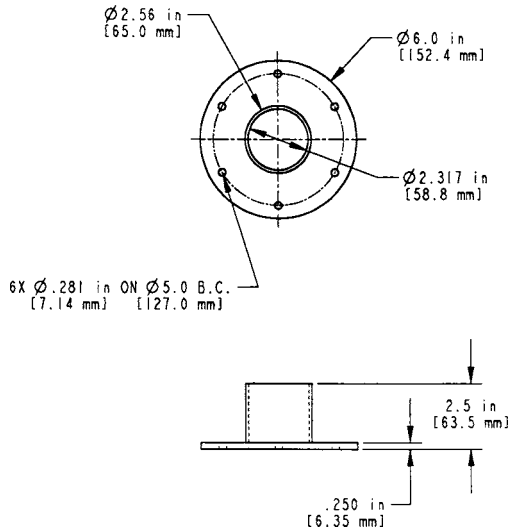

FIG. 1 (c) Hose Connector (Material: Aluminum or Steel—see Note 16) *(continued)*

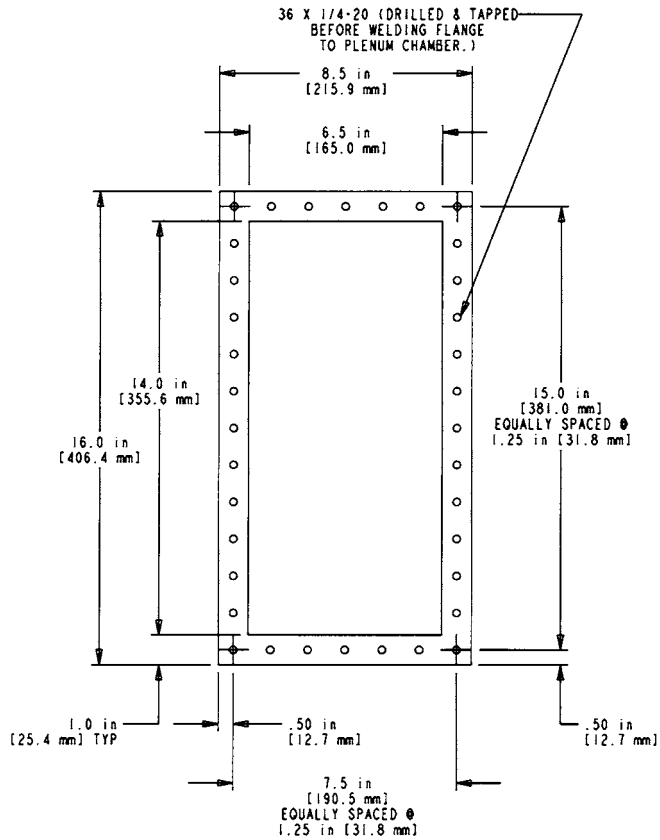

FIG. 1 (d) Flange Plate (Material: 0.250-in. (6.35-mm) Steel) *(continued)*

Documents
Document Sharing Hub
Full document details: ASTM F431-04

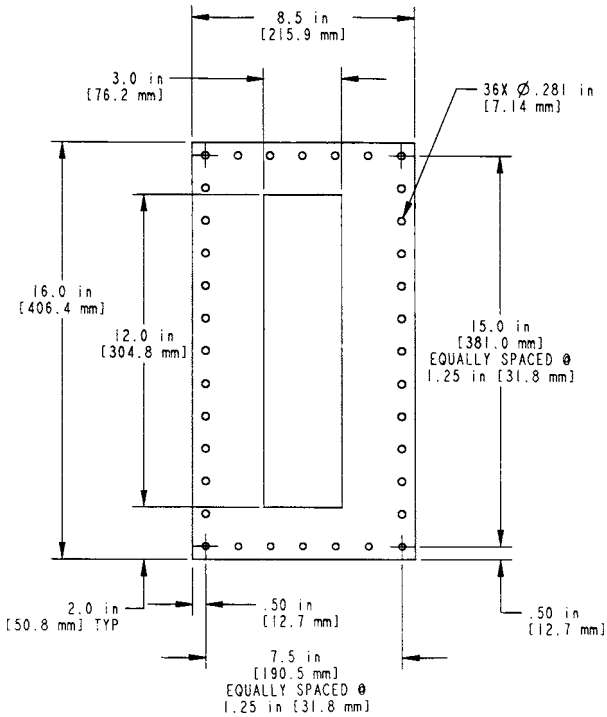

FIG. 1 (e) Cleaner Plate (Material: 0.250-in. (6.35-mm) Steel) *(continued)*

Documents
Document Sharing Hub
Full document details: ASTM F431-04