This international standard was developed in accordance with internationally recognized principles on standardization established in the Decision on Principles for the Development of International Standards, Guides and Recommendations issued by the World Trade Organization Technical Barriers to Trade (TBT) Committee.

Designation: F476 – 23

Standard Test Methods for Security of Swinging Door Assemblies[1]

This standard is issued under the fixed designation F476; the number immediately following the designation indicates the year of original adoption or, in the case of revision, the year of last revision. A number in parentheses indicates the year of last reapproval. A superscript epsilon (ε) indicates an editorial change since the last revision or reapproval.

1. Scope

1.1 These test methods cover door assemblies of various materials and types of construction for use in wall openings to deter unwanted intruders.

1.2 Door assemblies, covered by these test methods, also include individual components such as the hinge, lock, door, strike, and jamb.

1.3 These test methods are designed to measure the capability of a swinging door assembly to restrain or delay and frustrate the commission of "break-in" crimes.

1.4 These test methods apply primarily to typical entry door assemblies.

1.5 The values stated in SI units are to be regarded as standard. The values given in parentheses after SI units are provided for information only and are not considered standard.

1.6 *This standard does not purport to address all of the safety concerns, if any, associated with its use. It is the responsibility of the user of this standard to establish appropriate safety, health, and environmental practices and determine the applicability of regulatory limitations prior to use.*

1.7 *This international standard was developed in accordance with internationally recognized principles on standardization established in the Decision on Principles for the Development of International Standards, Guides and Recommendations issued by the World Trade Organization Technical Barriers to Trade (TBT) Committee.*

2. Referenced Documents

2.1 *ASTM Standards:*[2]

F471 Terminology Relating to Combination Locks (Withdrawn 2011)[3]

3. Terminology

3.1 *Definitions:*

3.1.1 *bolt, n*—any movable projection that blocks the movement of one object relative to another.

3.1.2 *bolt projection (or bolt throw), n*—distance from the edge of the door, at the bolt center line, to the farthest point on the bolt in the projected position, when subjected to end pressure.

3.1.3 *component, n*—as distinguished from a part, a subassembly that combines with other components to make up a total door assembly.

3.1.3.1 *Discussion*—The prime components of a door assembly include: door, lock, hinges, jamb, strike, and wall.

3.1.4 *cylinder, n*—complete operating unit that usually consists of the plug shell, tumblers, springs, plug retainer, a cam/tailpiece or other actuating device, and all other necessary operating parts.

3.1.5 *cylinder core (or cylinder plug), n*—central part of a cylinder, containing the keyway, that is rotated by the key to operate the lock mechanism.

3.1.6 *deadbolt, n*—bolt, which requires a deliberate action to extend, and resists end pressure in the unlocking direction when fully extended.

3.1.7 *dead latch (or dead locking latch bolt), n*—latchbolt with a deadlocking mechanism.

3.1.8 *door assembly, n*—any combination of a door, frame, hardware, and other accessories that is placed in an opening in a wall that is intended primarily for access or for human entrance or exit.

3.1.9 *jamb, n*—vertical members of a door frame (such as, those fixed members to which the door is secured).

3.1.10 *key-in-knob lockset, n*—any lockset with a key operated cylinder in one or more knobs.

3.1.11 *key-in-lever lockset, n*—any lockset with a key operated cylinder in one or more level handles.

3.1.12 *latch:*

3.1.12.1 *n*—mechanical or magnetic door fastener that can automatically keep a door, gate, and so forth, closed.

3.1.12.2 *v*—engagement of a latch when a door, gate, and so forth, is pushed or pulled closed.

---

[1] These test methods are under the jurisdiction of ASTM Committee F12 on Security Systems and Equipment and are the direct responsibility of Subcommittee F12.50 on Locking Devices.

Current edition approved Jan. 1, 2023. Published February 2023. Originally approved in 1976 . Last previous edition approved in 2014 as F476 – 14. DOI: 10.1520/F0476-23.

[2] For referenced ASTM standards, visit the ASTM website, www.astm.org, or contact ASTM Customer Service at service@astm.org. For *Annual Book of ASTM Standards* volume information, refer to the standard's Document Summary page on the ASTM website.

[3] The last approved version of this historical standard is referenced on www.astm.org.

Copyright © ASTM International, 100 Barr Harbor Drive, PO Box C700, West Conshohocken, PA 19428-2959. United States

Documents
Document Sharing Hub
Full document details: ASTM F476-23

3.1.13 *latch bolt, n*—spring-actuated bolt, normally with one or more beveled surfaces, that, when aligned with the strike, engages it automatically.

3.1.14 *lock, n*—any device that prevents access or use by requiring special knowledge or equipment.

3.1.15 *lock front, n*—outer plate through which the locking bolt projects and which is usually flush with the edge of the door.

3.1.16 *part, n*—as distinguished from component, a unit (or subassembly) that combines with other units to make up a component.

3.1.17 *strike, n*—bolt receptacle typically mounted in the door jamb or the floor.

3.1.18 *swinging door, n*—stile (side)-hinged door.

3.1.19 *Type A lock, n*—lock that uses a single bolt or separate latch and lock bolts that are mechanically interconnected.

4. Apparatus

4.1 Test equipment suitable for use in evaluating the physical security of door assemblies and components is described in this section. While certain commercial instruments are identified to adequately describe the test equipment, in no case does such identification imply recommendation or endorsement, nor does it imply that the material or equipment described is necessarily the best for the purpose.

4.2 *Door Ram*—The door ram is a pendulum system with a cylindrical weight capable of delivering horizontal impacts of 200 J (148 ft·lbf). Fig. 1 is a photograph of such a system. A sketch of the ram is shown in Fig. 2. It is a steel cylinder 152.4 mm (6 in.) in diameter, 393.7 mm (15.5 in.) long, with a hemispherical impact nose. It weighs 45 kg (99.2 lb). The impact nose used in this equipment is made from any durable impact-resistant material; examples are acetal, cast epoxypolyamide, or similar. The suspension system for the door ram consists of four flexible steel cables providing a swing radius of 1.71 m (5.61 ft), as shown in Fig. 3. These cables are adjusted to equal length with turnbuckles such that the ram swings in a straight, true arc and are attached to a steel frame that can be adjusted to be level. Fig. 1 also includes a diagram of the pendulum system when elevated and at rest, and the measurements required to calculate the impact energy of the system. Table 1 presents the potential energy of a pendulum system with a 45-kg (99.2-lb) weight as a function of various elevations of the weight.

4.2.1 Calibrated elevation stands, as shown in Fig. 1, or laser distance measurement devices are convenient means of quickly and reproductively establishing the proper ram elevation for each required impact.

4.3 *Component Ram*—The component ram is a pendulum system capable of delivering impacts of 100 J (74 ft·lbf). A sketch of the pendulum system is shown in Fig. 4. The pendulum weight has a diameter of 56 mm (2 3/16 in.), a length of 838 mm (33 in.), and weighs 16 kg (35.3 lb). The impact nose is made from a 6-mm (¼-in.) carriage bolt with the square shank removed. The vacuum release mechanism also shown in Fig. 4 is a convenient means of holding the component ram in the elevated position and releasing it to deliver the required impact.

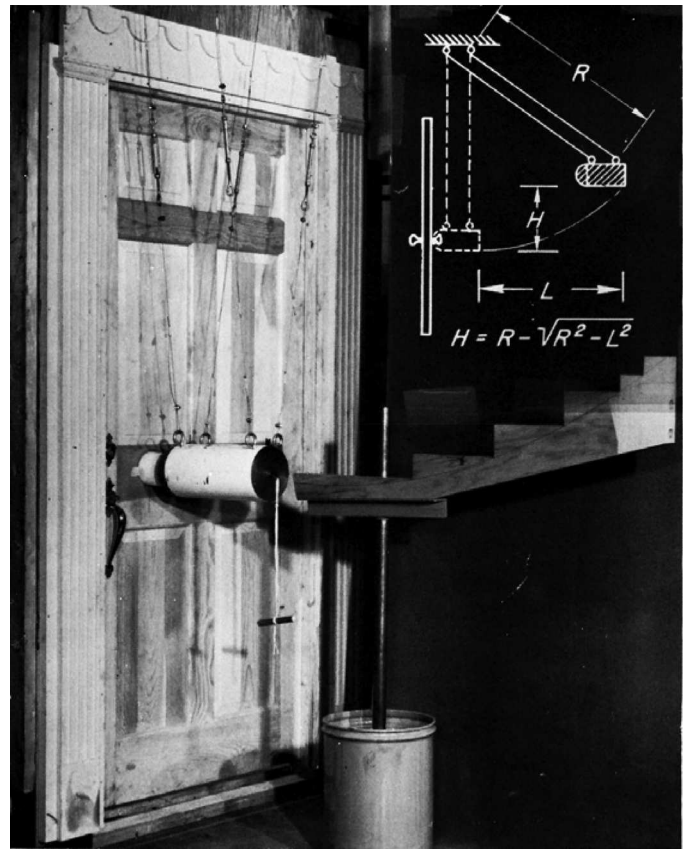

FIG. 1 Door Ram Pendulum System

4.3.1 The height of drop of the pendulum for an impact of 100 J (74 ft·lbf) is 637 mm (2.09 ft).

4.3.2 The vertical pendulum system shall use a steel weight and be capable of delivering vertical (downward) impacts of up to 100 J (74 ft·lbf) to a door knob installed in a door assembly.

4.4 *Vertical Impactor*—The vertical impactor is a rigid pendulum system capable of delivering downward impacts of 100 J (74 ft·lbf). Fig. 5 shows a photograph of the system. The construction of the pendulum is shown in Fig. 6, and the construction of the pivot assembly is shown in Fig. 7.

4.4.1 The effective weight of the flat-nosed steel weight is 10 kg (22 lb). An impact of 100 J (74 ft·lbf) is provided by a drop height of 1.02 m (3.35 ft).

4.4.2 *Torque Applicator*—The portable torque applicator shall be capable of delivering and measuring up to 160 N·m (118 lbf·ft) of torque to both door knobs and lock cylinders. The torque loading adapters shall be designed to grip the knobs and cylinders.

4.4.3 *Tension-Loading Device*—The tension-loading device shall be capable of delivering and measuring tensile forces of up to 18 kN (4000 lbf).

4.4.4 *Compression-Loading Device*—The compression-loading device shall be capable of delivering and measuring compressive forces of up to 900 N (200 lbf).

AVA Documents
Document Sharing Hub

Full document details: ASTM F476-23

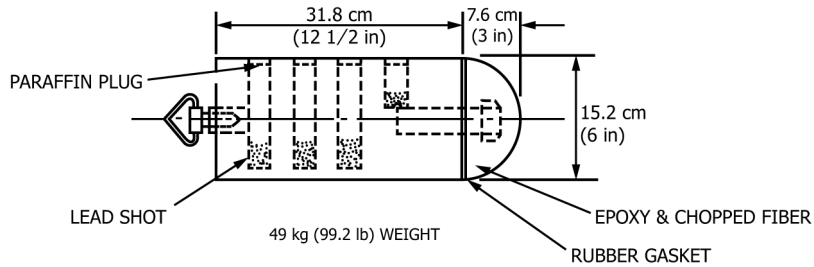

FIG. 2 Door Ram

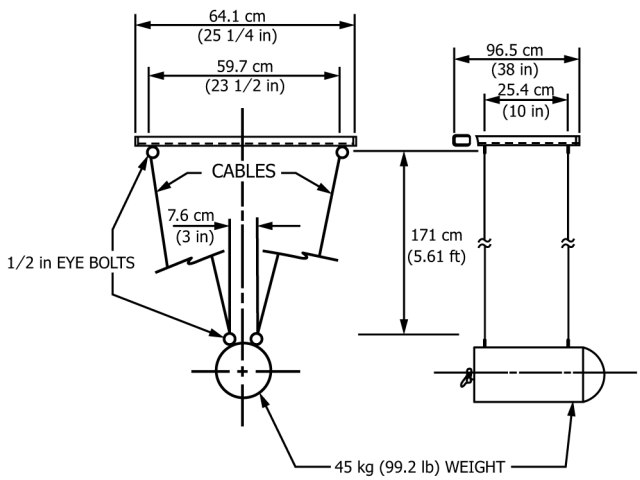

FIG. 3 Door Ram Suspension System

TABLE 1 Potential Energy of Pendulum[A] Used in Door Assembly and Component Tests

Potential Energy, J (ft·lbf)	Height Of Drop (*H*), mm (ft)[B]	Horizontal Swing Distance (*L*), mm (ft)
60 (44.3)	136 (0.45)	668 (2.19)
80 (59.0)	181 (0.59)	765 (2.51)
100 (73.8)	227 (0.74)	851 (2.79)
120 (88.5)	272 (0.89)	925 (3.04)
140 (103.3)	317 (1.04)	992 (3.26)
160 (118.0)	363 (1.19)	1053 (3.46)
180 (132.8)	408 (1.34)	1108 (3.64)
200 (147.5)	454 (1.49)	1160 (3.81)

[A] The pendulum weighed 45 kg (99.2 lb) and was suspended with a wing radius (*R*) of 1710 mm (5.61 ft).
[B] Height of drop.

$$(H) = R - \sqrt{R^2 - L^2}$$

4.4.5 *Jamb-Spreading Device*—The jamb-spreading device shall be capable of delivering to door jambs and measuring spreading forces of up to 22 kN (4950 lbf) with a means of measuring up to 13 mm (½ in.) of increase in lock-front to strike distance. The device shall have on each end either a load bearing plate or pressure foot that provides a minimum contact surface of 40 by 120 mm (1½ by 5 in.).

4.4.6 *Instrument Accuracy*—The tension loading and jamb-spreading devices shall have a combined calibration and reading error no greater than 200 N (45 lbf). The compression-loading device shall have a combined calibration and reading error of no greater than 40 N (9 lbf). The torquemeter shall have a combined error no greater than 3.4 N·m (2.5 lbf·ft). The impact energy of each pendulum system shall be controlled to within ±1 %.

5. Construction and Size

5.1 The construction and size of the test door assemblies, consisting of single doors, doors in pairs, special-purpose doors (such as Dutch doors), jambs and headers, and all hardware components shall be representative of the classification or rating that is desired.

5.2 The door assembly support fixture shall simulate the rigidity normally provided to a door assembly in a building by the ceiling, floor, and walls. Fig. 8 shows an acceptable fixture.

5.3 The test fixture for door, door jamb, hinge, lock, strike, and other components shall consist of a vertical wall section constructed from 2 by 4 wood studs, 410 mm (16 in.) on center, with a rough entry door opening, and shall be covered with 13-mm (½-in.) exterior grade plywood sheathing on the exterior and ½-in. gypsum board on the interior. It shall be constructed as shown in Fig. 9 and shall be secured to the wall support fixture (at the sides and top) and to the laboratory floor. For tests of door, lock, strike, and hinge components, the fixture wall section shall also include a door jamb.

5.4 The alternative test fixture for lockset components shall consist of a small door assembly, as shown in Figs. 10 and 11. The frame shall be fabricated from steel angle and plate at least 5 mm (3⁄16 in.) thick. The test panel shall be 600 mm (24 in.) square and 45 mm (1¾ in.) thick, made by bonding three pieces of plywood together or by cutting a section from a 45-mm (1¾-in.) solid wood core door (such as, glued block core construction NWMA IS-1). A 50 by 50 by 3-mm (2 by 2 by ⅛-in.) steel angle shall be bolted to the hinge edge of the door panel, and a removable steel strike plate shall be bolted to the frame at the lock position of the door panel. The alternate lockset component test fixture shown in Figs. 10 and 11 may be used in lieu of the lockset component test fixture shown. The use of steel plates and expendable wood blocks as shown in the drawing may be used on the full size test fixture as described in 5.3 when testing lock and hinge components.

5.5 The test fixture for static bolt load tests (9.2) shall consist of a vertical panel fabricated from wood attached to a stable horizontal base, as shown in Fig. 12. The top edge of the panel shall be parallel to the bottom surface of the base. The panel shall be about 45 mm (1¾ in.) thick and the top edge

AVA Documents
Document Sharing Hub

Full document details: ASTM F476-23

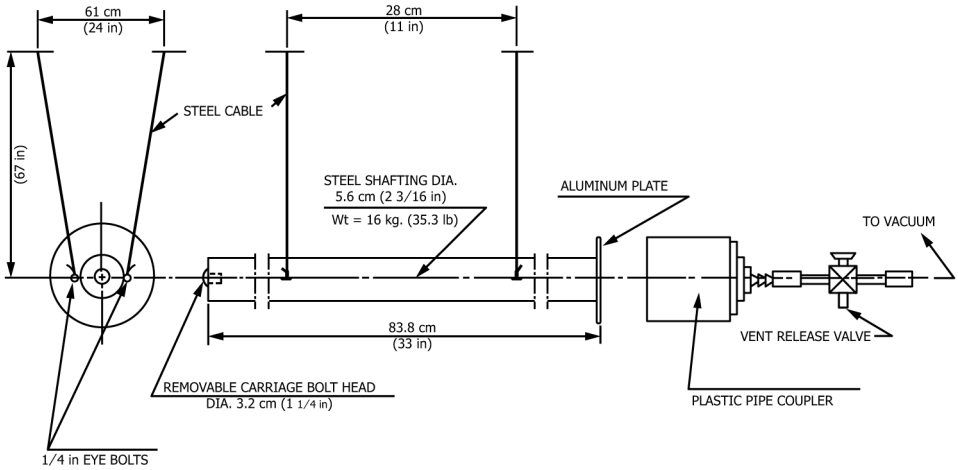

FIG. 4 Vacuum Release Mechanism

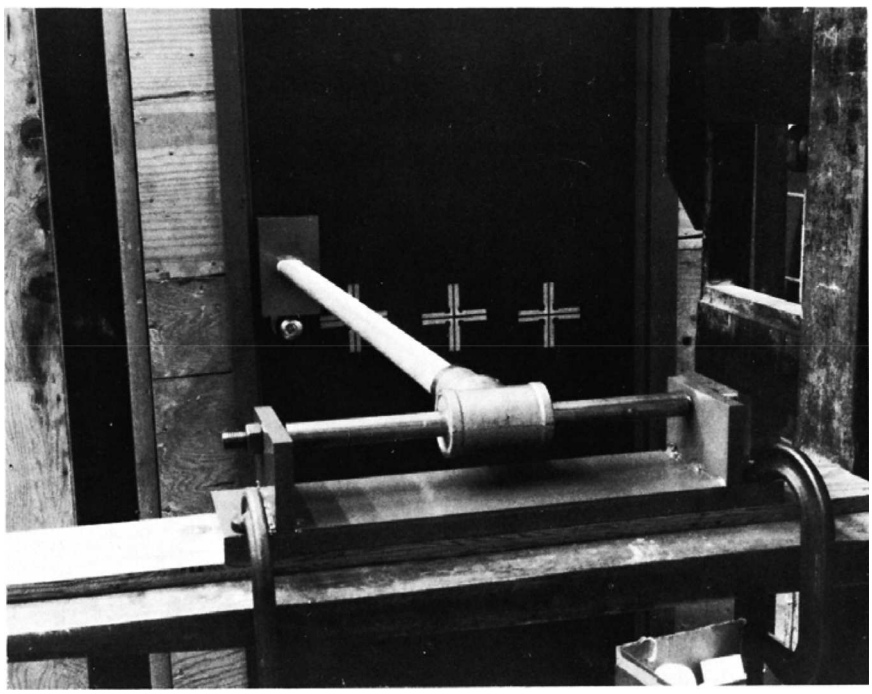

FIG. 5 Vertical Impactor

shall be prepared to permit the lock set which is being tested to be mounted in the panel in accordance with the manufacturer's instructions.

6. Sampling

6.1 Specimens shall be representative and adequately identified for future reference. Complete manufacturer or fabricator installation instructions and full-size templates for all items of hardware shall be included.

7. Mounting for Test

7.1 Swinging doors shall be mounted so as to open away from the working area, except when testing an out-swinging door assembly.

7.2 Prepare doors and door jambs for the installation of locksets and hinges in conformance with the manufacturer's instructions. Follow the manufacturer's instructions for fastening the jamb to the support fixture described in 5.2.

Documents
Document Sharing Hub
Full document details: ASTM F476-23

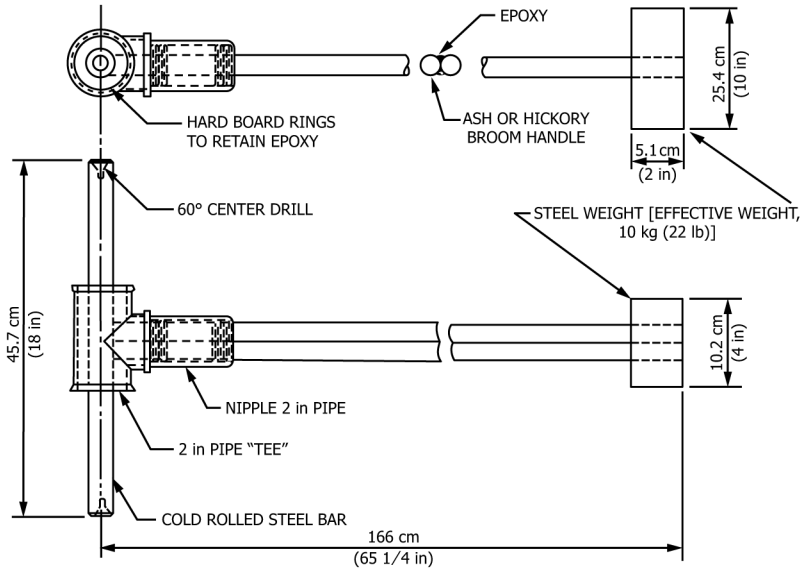

FIG. 6 Vertical Impactor Pendulum System

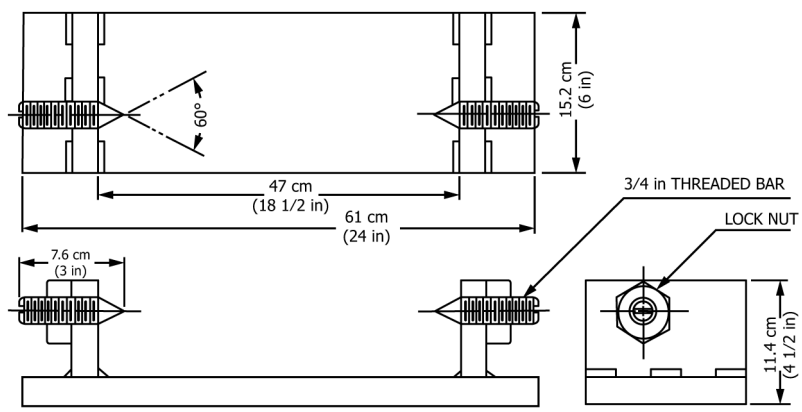

FIG. 7 Vertical Impactor Pivot Assembly

7.3 Install components such as test doors, door jambs, hinges, and jamb/strikes in the component test fixture described in 5.3. Except when testing hinges, hinge the door with 1½ pairs of 115-mm (4½-in.) steel butt hinges, and fix it in the closed-locked position (at the normal lock point) with a real or simulated latch bolt having sufficient strength and stiffness to prevent it from failing during test. In the absence of other construction specifications, make the clearances on the lock side, hinge side, and top of the door 3.2 ± 0.4 mm (⅛ ± 1⁄64 in.). Clearance at the threshold is not considered critical in these tests.

7.4 To test locksets as components, install them in the alternative component test fixture described in 5.4. Fix the test panel in the closed locked position at the normal locking point. Hinge the test panel with two 115-mm (4½-in.) steel butt hinges.

7.5 To test lock sets for static bolt load, install them in the test fixture described in 5.5.

8. Procedure

8.1 One complete assembly shall be used to conduct the tests. Tests shall be given in the sequence of Sections 9 – 20. Tests under Sections 9, 11, 12, 13, 14, and 15, if conducted in the test panel, shall not be repeated in the door assembly being tested. These tests need not be repeated for successive tests of other door assemblies where the same lock model is being used.

9. Static Bolt Load Test

9.1 To test Type A and B locks and all door assembly locks, mount the lock in the test fixture described in 5.5. Lock the door lock with the dead bolt or dead latch in the fully projected position. If the lock incorporates a dead-latch plunger, attach a 6.5-mm (¼-in.) spacer to the lock front. Allow the dead-latch plunger to project flush with the top of the spacer, and hold it in that position with a piece of tape, or by another suitable means.

9.2 Place the lock, in the test fixture, in a compression testing machine, or mount it on a firm, level surface with the compression loading device directly above it with the loading face parallel to the lock front, and the axis of the hydraulic ram perpendicular to the lock front. Apply an increasing compressive load to the end of the latch bolt or the dead bolt. Note the maximum force required to depress the latch bolt or dead bolt

AVA Documents
Document Sharing Hub

Full document details: ASTM F476-23