This international standard was developed in accordance with internationally recognized principles on standardization established in the Decision on Principles for the Development of International Standards, Guides and Recommendations issued by the World Trade Organization Technical Barriers to Trade (TBT) Committee.

Designation: F833 – 21

# Standard Consumer Safety Performance Specification for Carriages and Strollers[1]

This standard is issued under the fixed designation F833; the number immediately following the designation indicates the year of original adoption or, in the case of revision, the year of last revision. A number in parentheses indicates the year of last reapproval. A superscript epsilon (ε) indicates an editorial change since the last revision or reapproval.

## INTRODUCTION

This consumer safety performance specification addresses carriage and stroller incidents that were identified by the U.S. Consumer Product Safety Commission (CPSC).

The CPSC identified injuries to children associated with the following: stability, brakes, restraint systems, latches and folding mechanisms, structural integrity, cords, wheel detachment, and deaths due to entrapment in openings of convertible carriage/strollers. In response to the incident-data compiled by the CPSC, this consumer safety performance specification attempts to minimize the previously listed problems. This specification does not cover carriages and strollers that are blatantly misused, although warnings and safety instructions are required to be prominently displayed on or with each carriage or stroller.

NOTE 1—This consumer safety performance specification is not intended to address incidents and injuries resulting from the interaction of other persons with children in carriages or strollers or incidents resulting from unforeseeable abuse or misuse.

This consumer safety performance specification is written within the current state of the art of carriage and stroller technology. It is intended that this specification will be updated whenever substantive information becomes available which necessitates additional requirements or justifies the revision of existing requirements.

## 1. Scope

1.1 This consumer safety specification establishes safety performance requirements, test methods, and labeling requirements to minimize the hazards to children presented by carriages and strollers as identified in the introduction. Children's products such as tricycles, bicycles, or other similar wheeled products that can be self-propelled by a child are not considered carriages or strollers subject to the requirements of this standard, even if the item has a temporary or permanent handle.

1.2 No carriage or stroller produced after the approval date of this consumer safety performance specification shall, either by label or other means, indicate compliance with this specification unless it conforms to all requirements herein.

1.3 The values stated in inch-pound units are to be regarded as standard. The values given in parentheses are mathematical conversions to SI units that are provided for information only and are not considered standard.

1.4 The following precautionary caveat pertains only to the test method portion, Section 7, of this consumer safety specification: *This standard does not purport to address all of the safety concerns, if any, associated with its use. It is the responsibility of the user of this standard to establish appropriate safety, health, and environmental practices and determine the applicability of regulatory limitations prior to use.*

1.5 *This international standard was developed in accordance with internationally recognized principles on standardization established in the Decision on Principles for the Development of International Standards, Guides and Recommendations issued by the World Trade Organization Technical Barriers to Trade (TBT) Committee.*

## 2. Referenced Documents

2.1 *ASTM Standards:*[2]

D3359 Test Methods for Rating Adhesion by Tape Test

F406 Consumer Safety Specification for Non-Full-Size Baby Cribs/Play Yards

F963 Consumer Safety Specification for Toy Safety

[1] This specification is under the jurisdiction of ASTM Committee F15 on Consumer Products and is the direct responsibility of Subcommittee F15.17 on Carriages, Strollers, Walkers and Stationary Activity Centers.

Current edition approved June 15, 2021. Published August 2021. Originally approved in 1983. Last previous edition approved in 2019 as F833 – 19. DOI: 10.1520/F0833-21.

[2] For referenced ASTM standards, visit the ASTM website, www.astm.org, or contact ASTM Customer Service at service@astm.org. For *Annual Book of ASTM Standards* volume information, refer to the standard's Document Summary page on the ASTM website.

Copyright © ASTM International, 100 Barr Harbor Drive, PO Box C700, West Conshohocken, PA 19428-2959. United States



Documents
Document Sharing Hub
Full document details: ASTM F833-21

F2680 Test Methods and Specifications for Bicycle Manually Operated Front Wheel Retention Systems

2.2 *Federal Standards:*

16 CFR 1303 Ban of Lead-Containing Paint and Certain Consumer Products Bearing Lead-Containing Paint[3]

16 CFR 1500 Hazardous Substances Act Regulations[3] including sections:

1500.48 Mechanical Requirements for Determining a Sharp Point in Toys or Other Articles Intended for Use by Children Under Eight Years of Age

1500.49 Technical Requirements for Determining a Sharp Metal or Glass Edge in Toys or Other Articles Intended for Use by Children Under Eight Years of Age

1500.50-52 Test Methods for Simulating Use and Abuse of Toys and Other Articles Intended for Use by Children

16 CFR 1501 Method for Identifying Toys and Other Articles Intended for Use by Children Under Three Years of Age Which Present Choking, Aspiration, or Ingestion Hazards Because of Small Parts[3]

16 CFR 1508.07 (c)

2.3 *Other Standards:*

AS/NZS 2088 Prams and strollers—safety requirements[4]

EN 1888 Child care articles - Wheeled child conveyances - Safety requirements and test methods[5]

## 3. Terminology

3.1 *Definitions of Terms Specific to This Standard:*

3.1.1 *2D fold stroller, n*—a stroller that folds the handlebars and leg tubes only in the front-to-back (or back-to-front) direction.

3.1.2 *3D fold stroller, n*—a stroller that, when folded, collapses all handlebars and leg tubes both in the front-to-back (or back-to-front) and side-to-side directions.

3.1.3 *carriage, n*—wheeled vehicle generally used for the transport of an infant who is generally in a lying down position. The motive power is supplied by a person or persons pushing or pulling on a handle attached to the vehicle. A carriage may be capable of being folded for storage.

3.1.4 *conspicuous, n*—label that is visible, when the unit is in a manufacturer's recommended use position, to a person standing near the unit at any one position around the unit but not necessarily visible from all positions.

3.1.5 *convertible car seat/stroller, n*—car seat that has wheels and handle that can be converted to become a stroller without the addition of other components.

3.1.6 *convertible carriage/stroller, n*—wheeled vehicle that is intended to be converted by the owner to be used as either a carriage or a stroller.

3.1.7 *cord, n*—a length of slender, flexible material including monofilaments, woven and twisted cord, rope, elastic cords, plastic textile tapes, ribbon, and those fibrous materials commonly called string.

3.1.8 *double-action release mechanism, n*—a release mechanism that requires either two consecutive actions, the first of which must be maintained while the second is carried out, or two separate and independent single-action locking mechanisms that must be activated simultaneously to fully release.

3.1.9 *harness system, n*—shall include a waist and crotch restraint and a means of restraining the upper torso.

3.1.10 *infant, n*—young child who is not capable of sitting unassisted.

3.1.11 *jogging stroller, n*—stroller intended to be used for children at a jogging rate (run at a steady slow trot).

3.1.12 *manufacturer's recommended use position, n*—any position that is presented as a normal, allowable, or acceptable configuration for use of the product by the manufacturer in any descriptive or instructional literature. This specifically excludes positions that the manufacturer shows in a like manner in its literature to be unacceptable, unsafe, or not recommended.

3.1.13 *non-paper label, n*—any label material (such as plastic or metal) that either will not tear without the aid of tools or tears leaving a sharply defined edge.

3.1.14 *occupant(s), n*—that individual or those individuals who are in a product that is set up in one of the manufacturer's recommended use positions.

3.1.15 *occupant retention space, n*—space enclosed by the surfaces, for example, side walls or the floor, or both, of a carriage or convertible carriage/stroller that contains the occupant within a carriage or a stroller in the reclined carriage position.

3.1.16 *paper label, n*—any label material that tears without the aid of tools and leaves a fibrous edge.

3.1.17 *quick-release mechanism, n*—lever-actuated cam mechanism that connects and retains a wheel in a fork assembly.

3.1.18 *reclined carriage position, n*—adjustment position of a convertible carriage/stroller that allows for an interior angle of greater than 150° between the seat surface and the backrest.

3.1.19 *removable-wheel fork assembly, n*—fork assembly from which the wheel can be removed and reattached as a manufacturer recommended normal product use.

3.1.19.1 *Discussion*—A removable-wheel fork assembly can employ a quick release mechanism or other manually operated mechanism that does not require the use of tools for installation or removal.

3.1.20 *saddle hinge link, n*—a folding joint on the side of a 3D fold stroller that connects the front leg tube and handle tube.

3.1.20.1 *Discussion*—It includes a component (saddle hinge) that contains a pivot location and a recessed groove (see Fig. 1). When the stroller is unfolded, one of the tubes rotates around the saddle hinge pivot and rests in the recessed groove.

[3] *Code of Federal Regulations,* available from U.S. Government Printing Office, Washington, DC 20402.

[4] Available from SAI Global, http://www.saiglobal.com.

[5] Available from European Committee for Standardization (CEN), Avenue Marnix 17, B-1000, Brussels, Belgium, http://www.cen.eu.

AVA Documents Document Sharing Hub



Full document details: ASTM F833-21

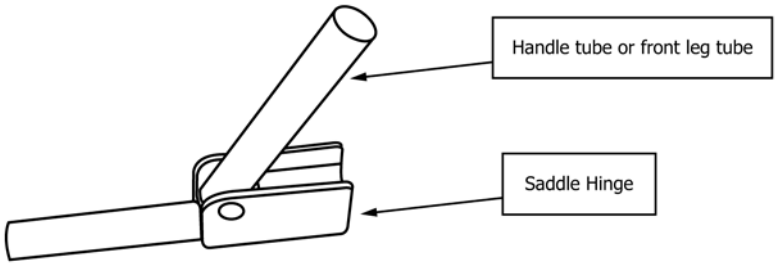


FIG. 1 Saddle Hinge Link

3.1.21 *static load, n*—vertically downward force applied by a calibrated force gage or by dead weights.

3.1.22 *strap, n*—piece of flexible material of which the width is significantly greater than the thickness.

3.1.23 *stroller, n*—wheeled vehicle for the transport of infants or children generally in a sitting-up or semi-reclined position. The motive power is supplied by a person moving at a walking rate while pushing on a handle attached to the stroller. A stroller generally is capable of being folded for storage. Strollers normally are used for children from infancy to 36 months of age.

3.1.24 *tray/grab bar locking position, n*—any position in which the tray or grab bar can lock including positions intended by the manufacturer for non-occupant use.

3.1.25 *tray/grab bar protective covering, n*—component designed and intended as a means to prevent exposure of any underlying *accessible foam* material. Examples include, but are not limited to woven, knit, coated, laminated, extruded, or calendered textile-based materials and leathers.

3.1.26 *tray/grab bar stop position, n*—any position in which the tray or grab bar is forward of the occupant, is not in a locking position, and remains stationary when a 5 lb force is applied to it for 10 s at any location and in any direction likely to cause it to change position.

3.1.26.1 *Discussion*—The 5 lb force is designed to overcome any small frictional force which would otherwise be overcome during normal use.

## 4. Calibration and Standardization

4.1 All testing shall be conducted on a concrete floor that may be covered with ⅛-in. (3-mm) thick vinyl floor covering, unless test instructs differently.

4.2 The unit shall be completely assembled, unless otherwise noted, in accordance with the manufacturer's instructions.

4.3 No testing shall be conducted within 48 h of manufacturing.

4.4 The product to be tested shall be in a room with an ambient temperature of 73 °F ± 9 °F (23 °C ± 5 °C) for at least 1 h prior to testing. Testing shall then be conducted within this temperature range.

4.5 All testing required by this specification shall be conducted on the same unit with the exception of 7.2, where a new unit can be used if the unit frame permanently deforms.

## 5. General Requirements

5.1 There shall be no hazardous points or edges as defined by 16 CFR 1500.48 and 16 CFR 1500.49 before and after testing to this consumer safety specification.

5.2 There shall be no small parts as defined by 16 CFR 1501 before testing or liberated as a result of testing to this specification.

5.3 The paint and surface-coating on the product shall comply to 16 CFR 1303.

5.4 Prior to testing, any exposed wood parts shall be smooth and free of splinters.

5.5 *Latching Mechanisms:*

5.5.1 Any unit that folds shall have a latching device or other provision in the design that will prevent the unit from unintentional folding when properly placed in the manufacturer's recommended use position. Products with latching devices for prevention of unintentional folding shall be tested in accordance with 7.2. During and upon completion of this test, the unit shall meet the requirements in 5.5.1.1 or 5.5.1.2.

5.5.1.1 The locking device on the unit shall remain latched.

5.5.1.2 The stroller frame components yield and permanently deform in a manner such that the full load specified cannot be applied in the direction of folding and the locking device remains engaged.

5.5.2 Strollers that employ hinged links with a geometric over center action (see Fig. 2) to maintain the product in the normal use position shall require two distinct and separate actions on the part of the user to initiate folding of the product.

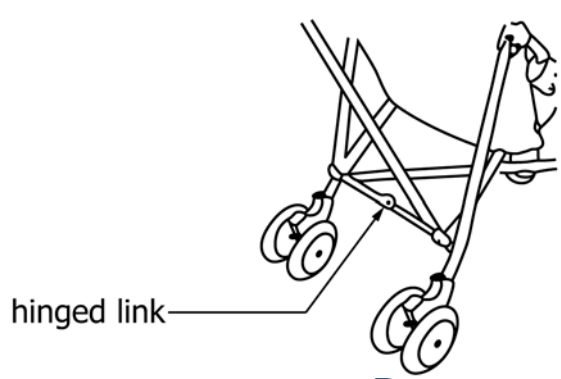


FIG. 2 Stroller With Hinged Link

AVA Documents
Document Sharing Hub



Full document details: ASTM F833-21

Such strollers shall require only a single action on the part of the user to secure the stroller in the normal use position.

5.6 *Openings*—Holes or slots that extend entirely through a wall section of any rigid material less than 0.375 in. (9.53 mm) thick and admit a 0.210-in. (5.33-mm) diameter rod shall also admit a 0.375-in. (9.53-mm) diameter rod. Holes or slots that are between 0.210 in. (5.33 mm) and 0.375 in. (9.53 mm) and have a wall thickness less than 0.375 in. (9.53 mm) but are limited in depth to 0.375 in. (9.53 mm) maximum by another rigid surface shall be permissible (see Fig. 3). The product shall be evaluated in all manufacturer's recommended use positions.

5.7 *Scissoring, Shearing, and Pinching:*

5.7.1 The unit, when in the manufacturer's recommended use position, shall be designed and constructed so as to prevent injury to the occupant from any scissoring, shearing, or pinching when members or components rotate about a common axis or fastening point, slide, pivot, fold, or otherwise move relative to one another. Scissoring, shearing, or pinching that may cause injury exists when the edges of the rigid parts admit a 0.210-in. (5.33-mm) diameter probe but do not admit a 0.375-in. (9.53-mm) diameter probe at any accessible point throughout the range of motion of such parts. This excludes the adjustment of accessory items such as storage latches, baskets, etc.

NOTE 1—The evaluation at any given location is performed with the understanding that the probes are allowed to enter the location from any angle/direction.

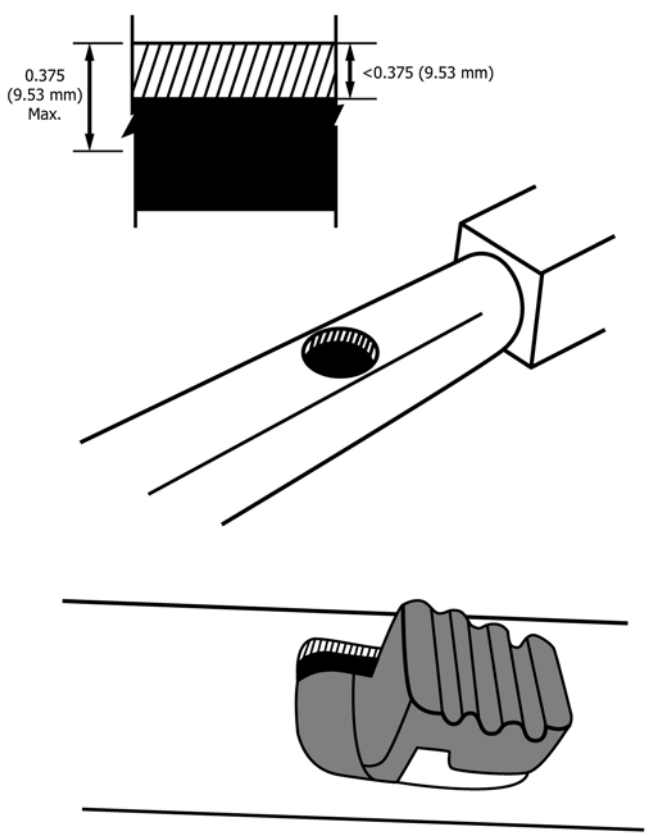


FIG. 3 Opening Example

5.7.2 Saddle hinge links on 3D fold strollers shall be designed and constructed so as to prevent injury from scissoring, shearing, or pinching. Scissoring, shearing, or pinching that may cause injury exists in a saddle hinge link when the edges of the rigid parts admit a 0.210-in. (5.33-mm) diameter probe but do not admit a 0.375-in. (9.53-mm) diameter probe when tested in accordance with 7.17.1.

NOTE 2—The evaluation at any given location is performed with the understanding that the probes are allowed to enter the location from any angle/direction.

5.7.3 Canopy pivots and canopy frame members shall comply with 5.7.1 when tested in accordance with 7.17.2. Canopy stretcher/locking device(s) are exempt from this requirement (see Fig. 4). The interface between canopy rods and canopy stops are exempt from this requirement if the canopy rod does not pass over or through the final canopy stop. Final canopy stops are those that prevent further movement or adjustment of the canopy (see example in Fig. 5). Intermediate canopy stop positions are not exempt from this requirement.

5.7.4 The frame folding action of a 2D fold stroller and convertible carriage/stroller (carriages are exempted from this requirement) shall be designed and constructed so as to prevent injury from scissoring, shearing, or pinching. Scissoring, shearing, or pinching that may cause injury exists when the edges of the rigid parts admit a 0.210-in. (5.33-mm) diameter probe but do not admit a 0.375-in. (9.53-mm) diameter probe when tested in accordance with 7.15. Units with a removable seat that prevent the complete folding of the unit when still attached are exempt from this requirement.

NOTE 3—The evaluation at any given location is performed with the understanding that the probes are allowed to enter the location from any angle/direction.

5.8 *Exposed Coil Springs*—Any exposed coil spring which is accessible to the occupant, having or capable of generating a space between coils of 0.210 in. (5.33 mm) or greater during static load testing (see 6.2 and 7.3) shall be covered or otherwise designed to prevent injury from entrapment.

5.9 *Labeling:*

5.9.1 Warning labels (whether paper or non-paper) shall be permanent when tested in accordance with 7.8.1 – 7.8.3.

FIG. 4 Stretcher/Locking Device

AVA Documents
Document Sharing Hub



Full document details: ASTM F833-21

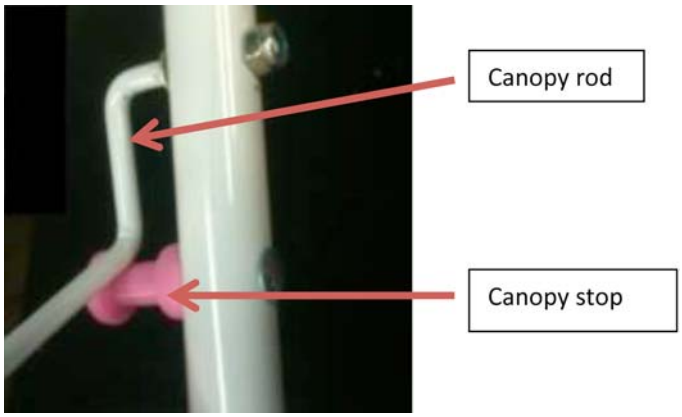


FIG. 5 Canopy Stop

5.9.2 Warning statements applied directly onto the surface of the product by hot stamping, heat transfer, printing, wood burning, etc. shall be permanent when tested in accordance with 7.8.4.

5.9.3 Non-paper labels shall not liberate small parts when tested in accordance with 7.8.5.

5.10 *Protective Components*—If a child can grasp components between the thumb and forefinger, or teeth, such as caps, sleeves, or plugs used for protection from sharp edges, points, or entrapment of fingers or toes, or if there is at least a 0.040-in. (1.00-mm) gap between the component and its adjacent parent component, such component shall not be removed when tested in accordance with 7.9.

5.11 *Seat Recline Measurement*—Place the back of the stroller in the most reclined position. Place the hinged boards with the hinged edge into the junction of the stroller back and seat (see Fig. 6). Measure the angle between the two boards.

5.12 *Toy*—Toy accessories attached to, removable from, or sold with unit, as well as their means of attachment, shall meet applicable requirements of Consumer Safety Specification F963.

5.13 *Cord/Strap Length*—Cords and straps that originate within or extend into the occupant space shall not create a loop that has an internal perimeter exceeding 14.8 in. (376 mm) nor have a free stretched length that exceeds a length of 7.4 in. (188 mm) when evaluated with 7.16. Cords or straps that do not originate within the occupant space but that can extend into the occupant space shall be evaluated in accordance with 7.16 only on the portion of the cord/strap that can extend into the occupant space. Restraint systems used to secure an occupant, all straps used to attach hand held infant carriers, and straps on hand held infant carriers, stroller carry straps, and stroller tether straps are exempt from this requirement.

5.14 *Tray/Grab Bar Protective Covering Requirement*—Trays/grab bars that are accessible and forward of the occupant shall meet any one of the following:

5.14.1 The tray/grab bar does not contain foam material.

5.14.2 The tray/grab bar covering prevents the underlying foam material from being exposed when tested per 7.19.

## 6. Performance Requirements

NOTE 4—The forces that are to be applied to the sample in the test methods described in Section 7 of this specification are applied readily by

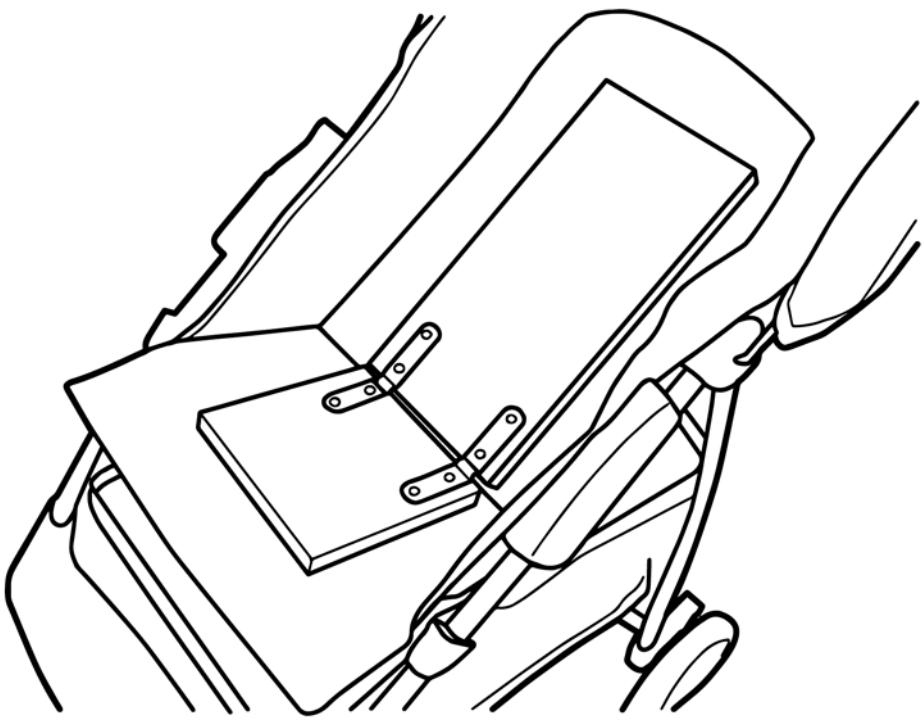

NOTE 1—¾ in. (19 mm) by 6 in. (150 mm) by 6 in. (150 mm) board hinged to a ¾ in. (19 mm) by 6 in. (150 mm) by 9 in. (225 mm) board placed in the junction of the stroller seat.

FIG. 6 Seat Back Recline Board

Documents
Document Sharing Hub



Full document details: ASTM F833-21

means of a calibrated force gage, or in the case of static load and dynamic load test methods, by dead weights.

6.1 *Parking Brake Requirements:*

6.1.1 A parking brake shall be provided on the unit. Each parking brake shall remain engaged during the test as specified in 7.6. Each parking brake shall prevent the braked wheel(s) from rotating more than 90° during the 5th test cycle specified in 7.6.

6.1.2 After completing the test described in 7.6, each parking brake shall be able to be engaged and shall meet the requirements of this standard in all parking brake engagement positions.

6.1.3 The parking brake release mechanism(s) shall comply with either 6.1.3.1, 6.1.3.2, or 6.1.3.3 when evaluated for each seating position of the product.

6.1.3.1 Each parking brake release mechanism shall be located outside the parking brake access zone for each seating position. Refer to Fig. 7. The space located behind the backrest is excluded from the parking brake access zone. Where a stroller is suitable for two or more children, the space located behind the backrest shall be considered if it enters another parking brake access zone. The access zone located under the seat is defined as a 2-in. (51-mm) band extending inward from each side of the seat/leg rest edge and downward for 5.9 in. (150 mm) from the uncompressed upper surface of the seat. (See Fig. 8.)

6.1.3.2 The parking brake release mechanism consists of one single-action release mechanism that shall not be released when a force of 10 lbf (45 N) or a torque of 3 lbf-in. (0.34 Nm) is applied directly to the release mechanism in the direction tending to release it.

6.1.3.3 The parking brake release mechanism is a double-action release mechanism.

6.2 *Static Load:*

Dimensions in inches (millimetres)

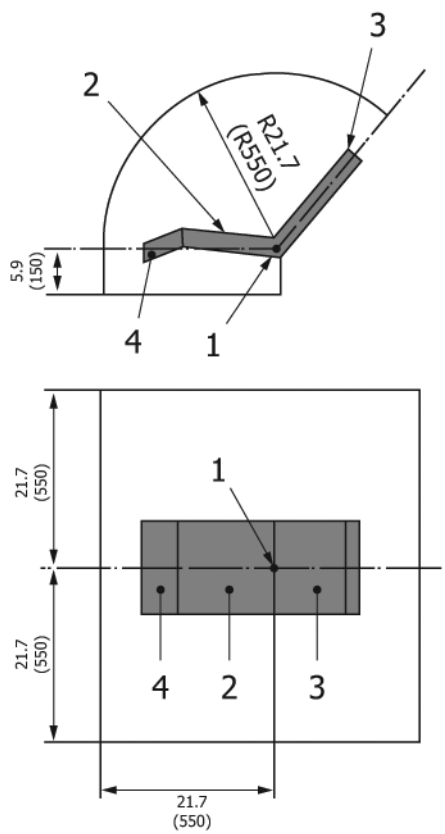


Key

1 origin from which the *access zone* has been defined (mid-point of the *junction line*, on the uncompressed upper surface of the *seat unit*)

2 seat

3 back rest

4 leg rest

**FIG. 7 Parking Brake Access Zone**



Documents
Document Sharing Hub
Full document details: ASTM F833-21

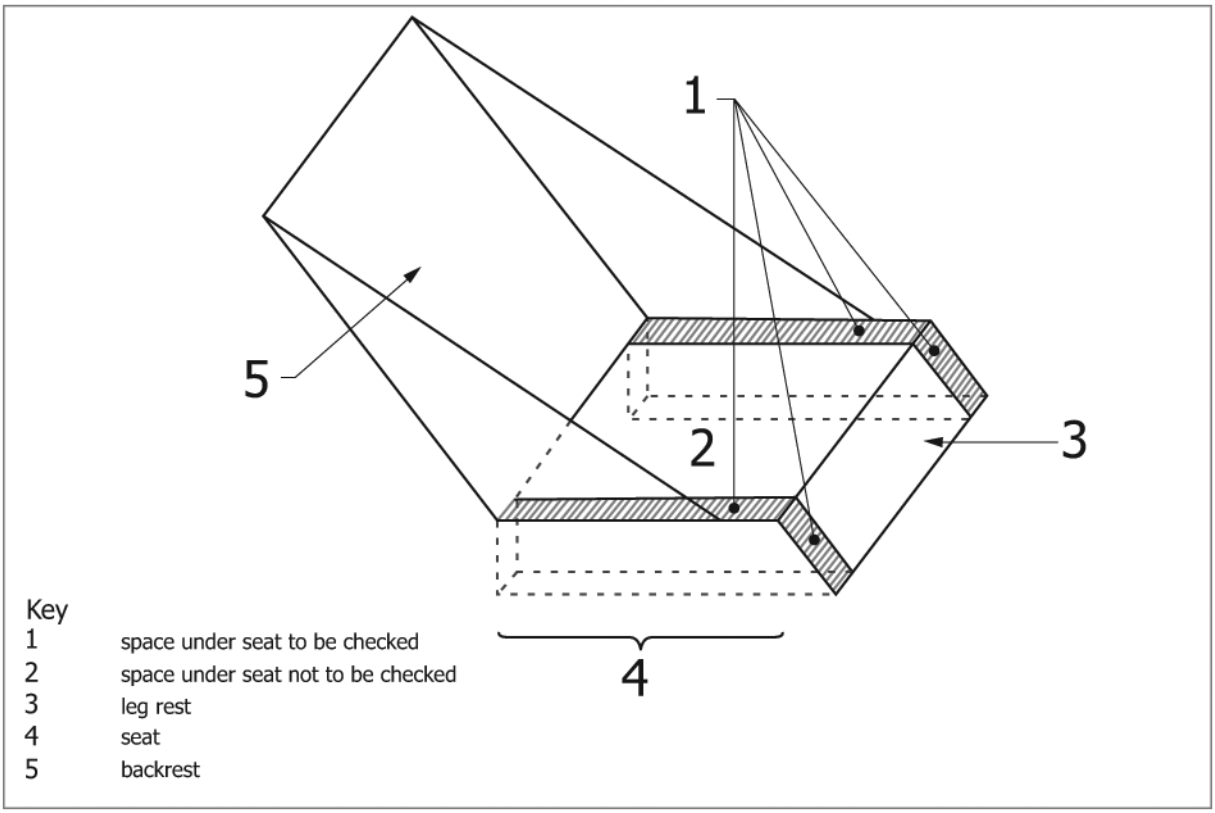


**FIG. 8 Parking Brake Access Zone Located Under the Seat**

6.2.1 A carriage shall support a static load of 50 lb (22.7 kg) when placed in the approximate center of the area intended to support the infant occupant.

6.2.2 A stroller shall support a static load of 100 lb (45.4 kg) or 2.5 times the manufacturer's recommended maximum weight, whichever is greater, per individual seating area, when placed in the approximate center of the area intended to support the child occupant.

6.2.3 A convertible carriage/stroller shall support a static load appropriate to the configuration in which the unit is erected. All configurations shall be tested.

6.2.4 A combination unit of a car seat on a stroller shall support a static load of 50 lb (22.7 kg) when placed in the approximate center of the area intended to support the occupant.

6.2.5 Test methods shall be performed in accordance with 7.3. At the conclusion of the test method, there shall be no unacceptable conditions as identified within this specification (see Note 5). In cases of multiple occupancy units, a specified test weight shall be applied simultaneously to each occupant position.

NOTE 5—For the purpose of this specification, the unacceptable conditions that might be identified by the static load test methods shall be failure to support the test weight, tip over, collapse of the product or a component of the product, sharp edges or points, and small parts.

6.2.6 Any step or footrest on the product shall support a static load of 50 lb (22.7 kg) or 1.25 times the manufacturer's recommended maximum weight, per individual seating area, whichever is greater.

6.3 *Stability*—The product shall remain on the appropriate test plane and not tip over when tested in accordance with 7.4. At the end of this test method, the unit shall remain in the manufacturer's recommended-use position on the inclined test plane when tested in accordance to 7.4.1 and on a horizontal test plane when tested in accordance with 7.4.2. In cases of multiple-occupancy units, the specified test weight shall be placed in any occupant seat deemed to be the worst or the most likely to fail. Products that include as original equipment manufacturer-supplied accessories for carrying any type of packages must be tested with these accessories both empty and loaded with the most adverse configured combination of weights, including the maximum weight(s) specified by the manufacturer, while each available seating position is occupied by the specified test weight.

6.4 *Restraining System*—All products covered by this specification, except carriages designed only for an infant, must have a child restraint system. The manufacturer shall attach the restraint system in such a manner that it will not become detached through normal usage. The restraint system shall include both waist and crotch restraint. The crotch resistant shall be designed such that its use is mandatory when the restraint system is in use.

6.4.1 *Carriage*—No restraining system is required if the carriage is intended to be used for an infant only. Carriages with accessory sit-up backs or other items indicating intent to be used for children developed beyond infancy must have a restraining system (see 6.4.4).

AVA Documents
Document Sharing Hub



Full document details: ASTM F833-21

6.4.2 *Stroller*—A restraining system shall be provided pre-assembled by the manufacturer to a component of the stroller.

6.4.3 *Convertible Carriage/Stroller*—A restraining system shall be provided on each convertible carriage/stroller that will function as though the unit is specifically a carriage (see 6.4.1) or stroller (see 6.4.2).

6.4.4 *Restraining System*—Test methods for all restraining systems shall be in accordance with 7.5. The restraint system and its closing means (for example, buckle) shall not part or slip more than 1 in. (25 mm). The anchorages shall not separate from their attachment points. At the end of the tests, the CAMI dummy shall not be released fully. When tested in accordance with 7.5.2.8, the restraint system (see Fig. 9 for Point C) shall not move more than 2 in. (51 mm).

6.4.5 *Harness System*—If a harness system utilizes seat back anchor points for shoulder straps, then the system shall meet the requirements of 7.5.3.

6.4.6 *Location of Restraining System*—When tested in accordance with 7.5.4, the restraining system shall meet the following requirements.

6.4.6.1 The anchor points of the waist restraint shall be between the 2-in. (50-mm) line and the 5-in. (127-mm) line on the test cylinder when tested in accordance with 7.5.4.3. (See Fig. 10.)

6.4.6.2 A 1-in. (25-mm) diameter probe shall not freely pass through any gap between the waist restraint and the test cylinder when tested in accordance with 7.5.4.4.

6.4.6.3 The forward most position of the junction of the crotch strap and seat surface shall not be in front of the test cylinder when tested in accordance with 7.5.4.5. A removable seat pad shall not be considered part of the seat surface.

6.4.6.4 The point on the lower edge of the waist strap shall be between the 4.5-in. (114-mm) line and the 7.5-in. (190-mm) line on the test cylinder when tested in accordance with 7.5.4.6.

6.4.7 *Buckle Release*—The waist buckle release mechanism shall meet either 6.4.7.1 or 6.4.7.2 when tested in accordance with 7.5.5.

6.4.7.1 The buckle shall have a single-action release mechanism that does not release at a force less than 9 lbf (40 N) when tested in accordance with 7.5.5.2.

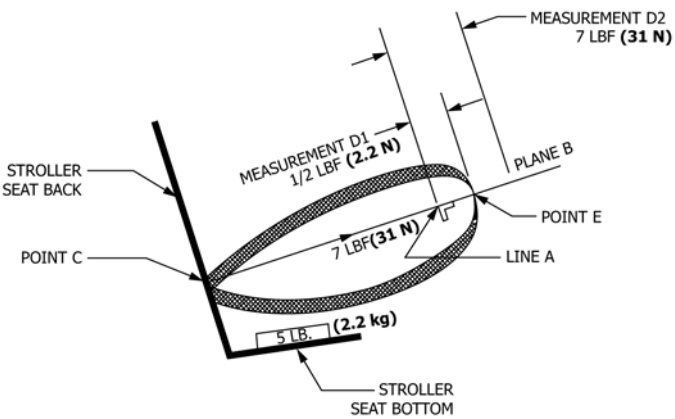


**FIG. 9 Restraint System Setup**

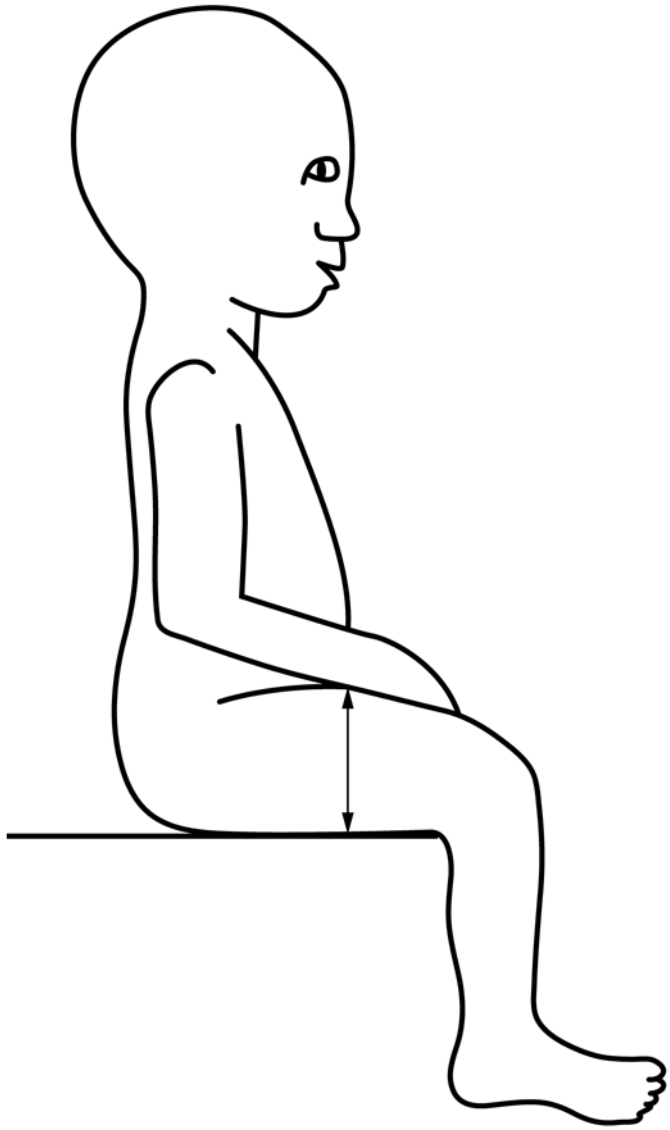

**FIG. 10 Thigh Depth, Seated**

6.4.7.2 The buckle shall consist of a double-action release mechanism that does not release with any one of the release mechanisms activated alone when tested in accordance with 7.5.5.3.

6.5 *Occupant Retention*—Carriages or seating locations of convertible carriage/strollers with a reclined carriage position(s) shall have a wall(s) surrounding all sides above the floor of the occupant retention space. The enclosure shall not allow the complete passage of the test probe shown in Fig. 11 through any completely bounded external openings (any holes) below the top edge of the occupant retention space when tested in accordance with 7.7.

6.5.1 Products with a reclined carriage position(s) must have a nondetachable feature to enable them to conform to the requirement in 6.5 unless the product only can be adjusted to any reclined carriage position when a detachable device is attached.

AVA Documents
Document Sharing Hub



Full document details: ASTM F833-21