This international standard was developed in accordance with internationally recognized principles on standardization established in the Decision on Principles for the Development of International Standards, Guides and Recommendations issued by the World Trade Organization Technical Barriers to Trade (TBT) Committee.

Designation: F887 – 20

Standard Specifications for Personal Climbing Equipment[1]

This standard is issued under the fixed designation F887; the number immediately following the designation indicates the year of original adoption or, in the case of revision, the year of last revision. A number in parentheses indicates the year of last reapproval. A superscript epsilon (ε) indicates an editorial change since the last revision or reapproval.

1. Scope*

Table of Contents

Section Title	Section/ Paragraph
Scope	1
Referenced Documents	2
Terminology	3
Significance and Use	4
Pole and Tree Climbers	
Classification	5
Ordering Information	6
Pole and Tree Climbers	7
Climber Gaffs	8
Climber Straps	9
Climber Pads	10
Climber Footplates	11
Body Belts, Positioning Devices and Wood Pole Fall Restriction Devices (WPFRD)	
Classification	12
Ordering Information	13
Two Dee Body Belts, Auxiliary Positioning Belts, and Four Dee Body Belts	14
Two Dee Body Belts	14.1
Auxiliary Positioning Belts and Four Dee Body Belts	14.2
Positioning Devices	15
Wood Pole Fall Restriction Device (WPFRD)	16
Arborist Saddle	17
Harnesses	
Classification	18
Ordering Information	18.2
Sizing	18.3
Marking	18.4
Energy Absorbing Lanyards	
Classification	19
Ordering Information	20
Energy Absorbing Lanyards	21
Qualification Testing	
After Exposure to an Electric Arc	22
Hardware Requirements	23
Test Equipment	24
Qualification Testing	25
Body Belts, Four Dee Body Belts, and Auxiliary Positioning Belts	25.1
Positioning Devices	25.2
WPFRD	25.3
Arborist Saddle	25.4
Harness	25.5
Energy Absorbers	25.6
Instructions	26
Guarantee and Rejection	27
Keywords	28

1.1 This standard covers the specifications and qualification testing of the following:

Climbers,
Climber straps,
Climber Pads,
Climber Footplates,
Body Belts,
Work Positioning Devices with Locking Snaphooks/Carabiners,
Wood Pole Fall Restriction Devices (WPFRD),
Arborist Saddle,
Harnesses,
Energy Absorbing Lanyards.

These devices are used by workers in the climbing of poles, trees, towers, and other structures. Minimum performance criteria for harnesses and energy absorbing lanyards in arresting a fall after exposure to electric arcs are included for workers who may be exposed to thermal hazards of momentary electric arcs or flame.

1.2 Equipment may fall within one of the following categories:

1.2.1 *Fall (Travel) Restraint*—Prevents a user from reaching a fall hazard (allow 0 fall distance).

1.2.2 *Work Positioning*—Allows a 2 ft maximum free fall distance.

1.2.3 *Fall Arrest*—Allows a 6 ft maximum free fall distance with a maximum arrest force of 1800 lb.

NOTE 1—Under certain conditions and with the use of equipment designed for such conditions, a 12-ft free-fall distance with a maximum arrest force of 1800 lb is allowed.

1.2.4 *Suspension*—Allows 0 free-fall distance while supporting the user's weight.

1.2.5 *Fall Restriction*—to prevent or limit free fall from a work position or while ascending/descending a wood pole.

1.3 Three types of climbers, (Types A, B, and C) and two types of climber straps, Types (A and B) are covered.

1.4 Two types of body belts, (Types A and B) are covered.

[1] This standard is under the jurisdiction of ASTM Committee F18 on Electrical Protective Equipment for Workers and are the direct responsibility of Subcommittee F18.15 on Worker Personal Equipment.

Current edition approved Feb. 15, 2020. Published April 2020. Originally approved in 1984. Last previous edition approved in 2018 as F887 – 18. DOI: 10.1520/F0887-20.

*A Summary of Changes section appears at the end of this standard

Copyright © ASTM International, 100 Barr Harbor Drive, PO Box C700, West Conshohocken, PA 19428-2959. United States

Documents
Document Sharing Hub

Full document details: ASTM F887-20

1.5 Eight types of work positioning devices: three positioning straps, (Types A, B, and C), three adjustable-positioning lanyards, (Types A, B and C) and two nonadjustable positioning lanyards, (Types A and B) are covered.

1.6 Two types of WPFRD, (Types A and AB) are covered.

1.7 Arborist saddle, (Type A) Work Positioning and Suspension are covered.

1.8 Two types of harnesses, (Types A and B) are covered.

1.9 Two types of energy absorbing lanyards, (Types A and B) are covered.

1.10 The values stated in United States customary units are to be regarded as standard. The values given in parentheses are mathematical conversions to SI units that are provided for information only and are not considered standard.

1.11 The following safety hazards caveat pertains only to the test method portions, 9.2, 10.3, 11.2, 14.1.4, 15.3, 15.4, 16.2, 17.2, 18.4, 21.2, 22, 23, and 25 of this standard: *This standard does not purport to address all of the safety concerns, if any, associated with its use. It is the responsibility of the user of this standard to establish appropriate safety, health, and environmental practices and determine the applicability of regulatory limitations prior to use.*

1.12 *This international standard was developed in accordance with internationally recognized principles on standardization established in the Decision on Principles for the Development of International Standards, Guides and Recommendations issued by the World Trade Organization Technical Barriers to Trade (TBT) Committee.*

2. Referenced Documents

2.1 *ASTM Standards:*[2]

F819 Terminology Relating to Electrical Protective Equipment for Workers

F1959/F1959M Test Method for Determining the Arc Rating of Materials for Clothing

2.2 *ANSI Standard:*[3]

ANSI 05.1 Wood Poles – Specification and Dimensions

2.3 *ANSI/ASSE/ASSP Standards:*[4]

Z359.0-2018 Definitions and Nomenclature Used for Fall Protection and Fall Arrest

Z359.3-2019 Safety Requirements for Lanyards and Positioning Lanyards

Z359.11-2014 Safety Requirements for Full Body Harnesses

Z359.12-2019 Connecting Components for Personal Fall Arrest Systems

Z359.13-2013 Personal Energy Absorbers and Energy Absorbing Lanyards

Z359.14-2014 Safety Requirements for Self-Retracting Devices for Personal Fall Arrest and Rescue Systems

2.4 *CSA Standard:*[5]

CAN/CSA 015 Wood Utility Poles and Reinforcing Stubs

3. Terminology

3.1 *Definitions:*

3.1.1 *adjustable positioning lanyard (APL), n*—a component of a work positioning or fall restriction system (may be used for applications such as transitioning past an obstruction during ascent or descent).

3.1.2 *afterflame, n*—persistent flaming of a material after the ignition source has been removed.

3.1.2.1 *Discussion—In arc testing*, a visible flaming on or near a test specimen which persists after the arc exposure has ended. The afterflame ceases when flaming is no longer visible.

3.1.3 *afterflame time, n*—Refer to Terminology F819 for definition.

3.1.3.1 *Discussion—In arc testing*, the length of time, in seconds, for which a specimen continues to exhibit a visible flaming as determined by a time display video recording of the specimen during arc testing.

3.1.4 *arborist saddle, n*—an arrangement of straps, fittings and buckles or other elements in the form of a waist belt with a low attachment suitably arranged to support the body in a sitting position. The saddle may or may not include individual leg straps or a rigid batten seat section.

3.1.5 *arc gap, n*—Refer to Terminology F819 for definition.

3.1.6 *attachment element, n*—part or parts of an assembly intended for the load bearing connection of other components.

3.1.7 *attachment point, n*—specific connecting point on an assembly for load bearing connection to other components, consisting of one or more attachment elements.

3.1.8 *auxiliary positioning belt, n*—a modular device made up of straps, pads, buckles, and attachment points for fastening to a waist body belt.

3.1.8.1 *Discussion*—An auxiliary positioning belt is used for attachment to a two ring body belt and intended for work positioning or fall restriction while transitioning past obstructions during an ascent or descent and for support for a two ring body belt.

3.1.9 *billet, n*—the free (buckle hole) end of a belt or strap as opposed to the buckle end, which is designed to pass through the buckle for closing.

3.1.10 *body belt (two or four dee), n*—an element of a work positioning system with two or four connection points consisting of straps, pads, buckles, and rings that allow a user to work freely with both hands (see Fig. 1).

3.1.10.1 *Discussion*—The width of the back section of a body belt is directly related to and can vary dependent on the number of dee rings that will be accommodated, for example, two dee rings, four dee rings, or more.

[2] For referenced ASTM standards, visit the ASTM website, www.astm.org, or contact ASTM Customer Service at service@astm.org. For *Annual Book of ASTM Standards* volume information, refer to the standard's Document Summary page on the ASTM website.

[3] Available from American National Standards Institute (ANSI), 25 W. 43rd St., 4th Floor, New York, NY 10036, http://www.ansi.org.

[4] Available from the American National Standards Institute, ANSI, 25 W. 43rd St., 4th Floor, New York, NY 10036.

[5] Available from Canadian Standards Association (CSA), 178 Rexdale Blvd., Toronto, ON M9W 1R3, Canada, http://www.csagroup.org.

AVA Documents
Document Sharing Hub

Full document details: ASTM F887-20

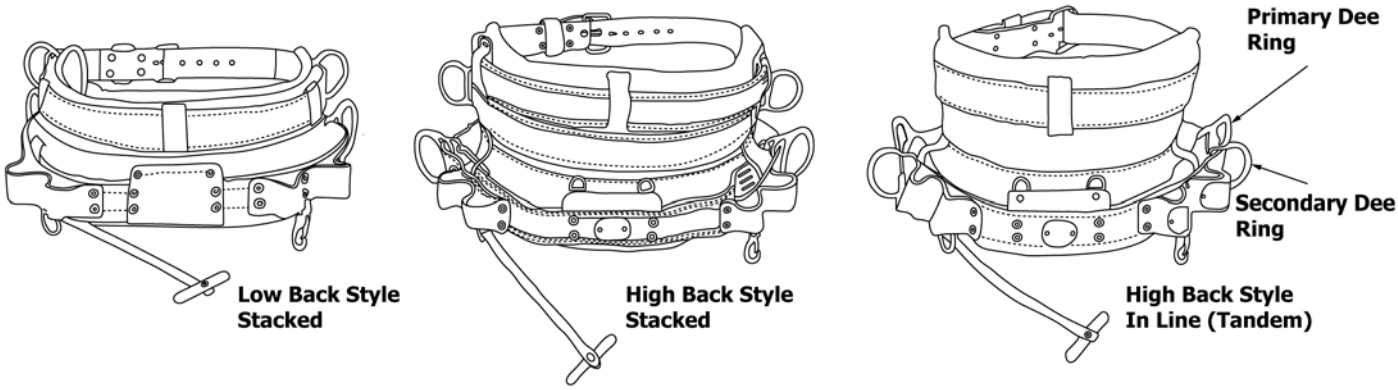

FIG. 1 Dee Ring Configurations for 4 Dee Body Belts

3.1.11 *body belt attachment, n*—a system of straps and buckles which allow the harness wearer to use a body belt in conjunction with the harness.

3.1.12 *climber, n*—device used to assist in ascending and descending wood poles or trees. Climbers generally consist of leg iron, gaff, sleeves, straps, and pads.

3.1.13 *dee-ring, D-ring, n*—an element which allows for attaching a connecting device such as a carabiner or snaphook.

3.1.14 *design test, n—for F887 applicable fall protection equipment*, a test conducted on a sample or group of samples to represent how the design of product will perform during use. Design tests are used to qualify new products or revisions to existing product to this standard and are not required for each production batch as long as the design remains unchanged with respect to strength, function or performance.

3.1.15 *distorted, v*—Refer to Terminology F819 for definition.

3.1.16 *dripping, n—as related to the burning of a textile*, liquefied material that separates and falls from a textile.

3.1.16.1 *Discussion—in electric arc testing of fall protection equipment or devices*, a material response evidenced by flowing of the fiber polymer, the fabric, or the fabric coating, and the evidence of droplets from the material, that characterizes overall performance relative to reducing the transfer of heat that is sufficient to cause a second-degree burn.

3.1.17 *electric arc ignition, n—as related to electric arc exposure*, a response that causes the ignition of the material which is accompanied by heat and light, and then subsequent burning (see 22.6.1).

3.1.18 *electrode, n*—Refer to Terminology F819 for definition.

3.1.19 *element, n*—an integral part of a constituent, component, hybrid component, sub-system or system. (Webbing, attachments and fittings are examples of elements.)

3.1.20 *energy absorbing lanyard, n*—a lanyard containing a component whose primary function is to dissipate energy and limit deceleration forces which the system imposes on the body during fall arrest.

3.1.21 *fall arrest, n*—the action or event of stopping a free fall or the instant where the downward free fall has been stopped. (See ANSI/ASSP Z359.0-2018.)

3.1.22 *fall restraint, n*—a fall protection system which prevents the user from falling any distance.

3.1.22.1 *Discussion*—Fall restraint systems prevent the user from falling any distance while performing work tasks on a horizontal surface.

3.1.23 *fall restriction, n*—the act of preventing or limiting free fall from a work position, or while ascending or descending a wood pole.

3.1.24 *fastening and adjusting element, n*—devices that enable an assembly to be fastened and allow adjustment to be made to meet sizing requirements of the user.

3.1.25 *full body harness, n*—a component with a design of straps which is fastened about the person in a manner so as to contain the torso and distribute the fall arrest forces over at least the upper thighs, pelvis, chest, and shoulders with means for attaching it to other components or sub-systems.

3.1.26 *gaff, n*—a component of a pole or tree climber attached to the climber shank, similar to a spur, which is shaped to permit the secure penetration of the pole or tree trunk.

3.1.27 *gate/keeper, n*—a component of the snaphook/carabiner, that locks the snaphook/carabiner in a closed position by a spring and a separate locking mechanism (see Fig. 2).

3.1.27.1 *Discussion*—The gate/keeper is the closing mechanism on the open end of the snaphook/carabiner which prevents the snaphook/carabiner from inadvertently opening up during use in an elevated workplace.

3.1.28 *hardware, connectors, n*—attaching components used to couple components of a fall protection system together.

3.1.28.1 *Discussion*—Hardware, connectors may be independent components of a system or may be integral elements of a component, hybrid component, subsystem or system used for fall protection.

3.1.29 *leg iron, n*—a component of a pole or tree climber. The base or frame of the climber consisting of a shank and stirrup section. (see Fig. 3 for illustration of a leg iron with attached gaff and sleeve).

3.1.30 *length adjusting device (LAD), n*—a device that provides the means to adjust the effective length of a lanyard.

3.1.31 *locking mechanism, n*—a component of the snaphook used in conjunction with the gate/keeper to restrain the gate/

Document Sharing Hub

Full document details: ASTM F887-20

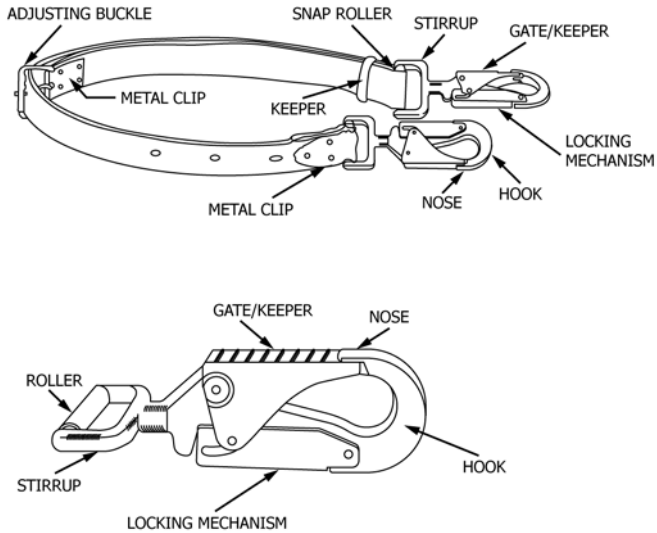

FIG. 2 Components of Positioning Strap

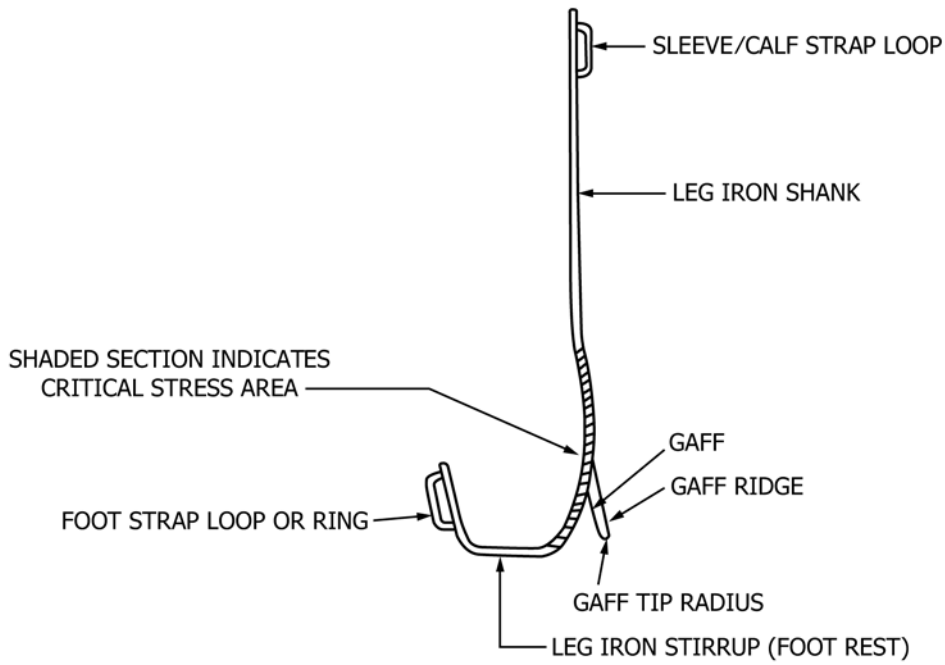

FIG. 3 Critical Stress Area of the Climber

keeper in a closed position until intentionally released and opened. A snaphook thus equipped, becomes a "locking snaphook."

3.1.32 *locking snaphook, n*—a snaphook with a locking mechanism (see 3.1.31).

3.1.33 *melting, n*—the liquefaction of material under the influence of heat.

3.1.34 *nose, n*—the end of the snaphook which the gate/keeper rests on. It overlaps the gate/keeper latch in such a manner as to prevent the dee-ring from inadvertently releasing the snaphook (see Fig. 2).

3.1.35 *part (body belt), load-bearing, n*—a part of the body belt or work positioning strap that, when in use with both snaphook/carabiner of the work positioning strap engaged in one dee-ring of the body belt, will be required to support all or part of the mass of the user. This includes all the material in the work positioning strap, and, in the case of the body belt, the material to which the dee-rings are directly fastened, and the material of the buckle strap that passes across the wearer's abdomen.

3.1.35.1 *Discussion*—This definition and the strength requirements described in 15.3.2 are designed to ensure that the buckle strap is strong enough to withstand certain emergency conditions, but are not to be construed as approval of attaching both snaphooks to the same dee-ring when working aloft. OSHA Subpart M (1926.502) prohibits working with two

AVA Documents
Document Sharing Hub

Full document details: ASTM F887-20

load-bearing snaphooks in the same dee-ring unless snaphooks are of the locking type and designed for such application.

3.1.36 *part, load bearing, (Type A and B harness), n*—a component of a harness to which arrest forces are directly transmitted in the event of a fall.

3.1.37 *part, load bearing, (positioning/restrict/suspension), n*—a component of the unit to which body weight forces are directly transmitted in the event of a fall.

3.1.38 *permanent deformation, n*—a deformation occurring beyond the yield point so that the structure will not return to its original dimensions after removal of the applied force.

3.1.39 *positioning lanyard, n*—a component of a climbing system consisting of a flexible line of rope or webbing generally with a connecting link at each end and may incorporate a length adjusting device to allow for adjustability.

3.1.40 *protector, gaff, n*—a cap or guard designed to cover the points of pole or tree gaffs to protect the gaffs from damage, from injuring people or from damaging equipment.

3.1.41 *positioning, n*—the act of supporting the user's body with a work positioning system for the purpose of working with hands free.

3.1.42 *positioning system, n*—a combination of work positioning equipment defined by this standard intended for use in supporting a user in a work position on an elevated vertical surface with both hands free (i.e. climber, body belt or arborist saddle, WPFRD & APL etc.)

3.1.43 *primary dee-ring (body belt), n*—main connection point on each side of the body belt.

3.1.43.1 *Discussion*—Primary dee rings serve as the connection point used to maintain a user in a hands free work position (see Fig. 1 and Fig. 4).

3.1.44 *primary positioning device, n*—a flexible line of rope or webbing that utilizes a connecting link at both ends and may include an adjustable length device.

3.1.44.1 *Discussion*—Primary positioning devices are used in work positioning as the support member between primary dee rings or connection points on a body belt to maintain a user in the hands free work position.

3.1.45 *secondary dee ring, D-ring (body belt), n*—connection point on each side of the body belt, used to maintain fall protection while transitioning above/below obstacles (see Fig. 1).

3.1.45.1 *Discussion*—Secondary dee rings are used on each side of the four dee ring body belt in a stacked or tandem position at the discretion of the user or using company's work practice.

3.1.46 *secondary positioning device, n*—a flexible line of rope or webbing that utilizes a connecting link at both ends and may include an adjustable length device for transitioning or traversing obstacles.

3.1.46.1 *Discussion*—Secondary work positioning devices are a component of a climbing system used to maintain fall protection when transitioning over/under obstacles.

3.1.47 *stirrup, climber, n*—the footrest of the pole or tree climber.

3.1.48 *stirrup, snaphook/dee-ring, n*—the closed rectangular portion of the work positioning strap snaphook, or body belt dee-ring (see Fig. 2 and Fig. 5), that accepts the strap or belt material in a permanent manner.

3.1.49 *suspension, n*—the act of supporting a user's body weight, including equipment, for the purpose of accessing a work location with one or two points of contact.

3.1.50 *wood pole fall restriction device (WPFRD), n*—a device that when properly adjusted and combined with other subcomponents and elements, allows the climber to remain at his or her work position with both hands free, and that performs a fall restriction function if the climber loses contact between his or her gaffs and the pole.

3.1.51 *work positioning, n*—the act of supporting the body with a positioning system for the purpose of working with hands free. (See ANSI/ASSP Z359.0-2018.)

4. Significance and Use

4.1 The following personal tools or equipment covered by this standard are:

4.1.1 Climbers and climber straps used to ascend and descend poles and trees.

4.1.2 Body belts and positioning devices utilized for work positioning on poles, ladders, or structures.

4.1.3 WPFRD and adjustable positioning lanyards are used as components of a work positioning and fall restriction system and utilized in conjunction with a body belt.

4.1.4 Arborist saddle is intended for work positioning and suspension (ascent and descent) primarily in trees. The arborist saddle is not intended for use in fall arrest (See Fig. 6).

4.1.5 Full body harnesses and energy absorbing lanyards utilized in preventing and arresting falls.

4.2 Test methods included in this standard are intended to provide uniform test procedures.

4.3 Snaphooks and carabiners utilized in fall protection systems.

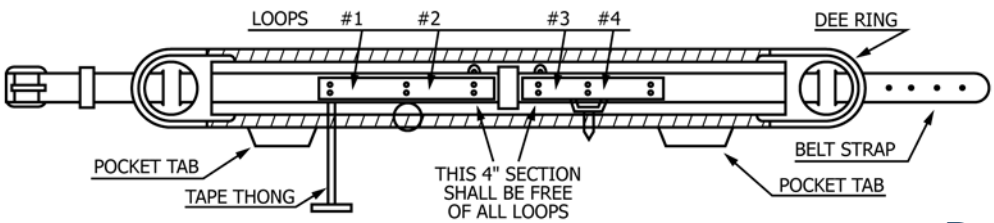

FIG. 4 Body Belt Nomenclature

Documents
Document Sharing Hub

Full document details: ASTM F887-20

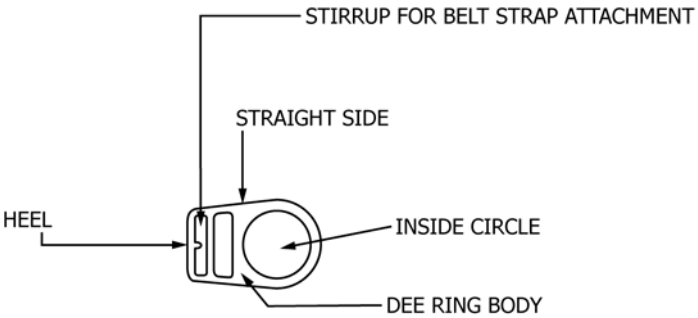

FIG. 5 Typical Body Belt Dee-Ring

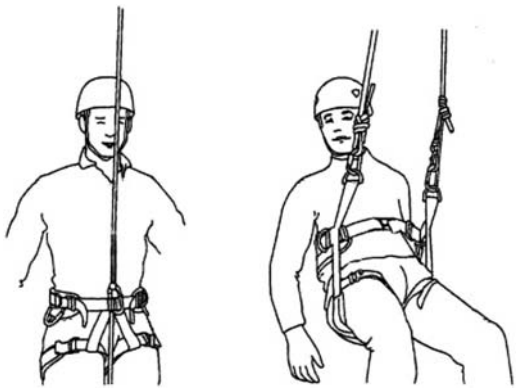

FIG. 6 Arborist Saddles, Shown in Typical Suspension Applications

4.3.1 All products being marked as meeting the requirements of this standard shall utilize locking snaphooks or carabiners in accordance with Section 23. Locking snaphooks and carabiners are designed to prevent rollout from occurring while being able to be operated with one hand during use.

4.4 Illustrations are furnished only to amplify the text. They are not to be considered restrictive as to specific design details, except where so stated.

4.5 Except for the restrictions set forth in this standard because of design limitations, the use and maintenance of this equipment is beyond the scope of the standard.

4.5.1 For this type of protective equipment, it is common practice and the responsibility of the manufacturer to provide instructions regarding proper use, care and maintenance of the equipment and for the user's employer to provide training in and procedures for the safe use of such equipment.

POLE AND TREE CLIMBERS

5. Classification

5.1 Climbers covered under this standard shall be designated as Type A, B, or C, as follows:

5.1.1 *Type A*—Fixed length, non-adjustable, with permanently attached gaffs.

5.1.2 *Type B*—Adjustable length, with permanently attached gaffs.

5.1.3 *Type C*—Adjustable length, with replaceable and interchangeable gaffs.

5.2 Climber straps covered under this standard shall be designated as Type A or B, as follows:

5.2.1 *Type A*—One-piece straps that pass through the loops or rings on climbers and buckle one end to the other.

5.2.2 *Type B*—Two-piece ankle or bottom straps made so that each section can be attached to the climber ring, leaving the buckle end free to engage with the free billet end of the other piece.

6. Ordering Information

6.1 Orders for equipment under this standard shall include the following information:

6.1.1 Nomenclature,

6.1.2 Type,

6.1.3 Material,

6.1.4 Size, and

6.1.5 Gaff type (pole or tree).

6.2 The listing of equipment, types, and sizes is not intended to mean that all shall necessarily be available from the manufacturer; this listing signifies only that, if made, the equipment, types, and sizes shall conform to the details of this standard.

7. Pole and Tree Climbers

7.1 *Sizes:*

7.1.1 Type A shall be available in sizes from 14 to 22 in. (355.6 to 558.8 mm) in ½ in. (12.7 mm) graduations.

7.1.2 Types B and C shall be available with the size adjustment capability of 14¾ to 21 in. (374.7 to 533.4 mm) by increments of ¼ in. (6.4 mm).

7.1.3 Adjustable climbers shall be equipped with positive locking, length-adjusting sections that can be double locked securely to the leg iron, permitting full compliance with standards established for fixed length climbers.

7.2 *Materials and Properties*—Leg irons manufactured utilizing quality alloy steel, aluminum or titanium alloys shall meet the performance requirements of this standard. SAE 4140, SAE 8630 and SAE 8640 steel alloys with quenched and tempered structure, 2014 T6 aluminum alloy and Ti6AL4V titanium alloy are commonly used.

TABLE 1 Typical Material Properties for Climbers

	For Fixed Gaff Climbers	For Replaceable Gaff Climbers [A]
Steel:		
Elongation in 2 in. (5 cm), min	14 %	14 %[A]
Hardness	23 to 38 HRC 243 to 353 HB[B]	32 to 40 HRC[A] 300 to 375 HB [B]
Yield strength, min, psi (MPa)	118 000 (815)	130 000 (895)[A]
Aluminum:		
Elongation in 2 in. (5 cm), min	...	10 %
Hardness	...	125 to 140 HB [B]
Yield Strength, min, psi (MPa)	...	65 000 (450)
Titanium:		
Elongation in 2 in. (5 cm), min	...	10 %
Hardness	...	30 to 40 HRC 286 to 371 HB [B]
Yield Strength, min, psi (MPa)	...	120 000 (828)

[A] Data from Federal Specification RR-C-430 C. (Cancelled)
[B] Brinell hardness number with 3000-kg load, 10-mm ball.

AVA Documents
Document Sharing Hub

Full document details: ASTM F887-20

7.2.1 Materials other than those stated herein are permitted only when it can be demonstrated by testing that all applicable performance requirements of this standard are met and that the durability, reliability and other properties pertinent to the intended uses have been evaluated and determined suitable by testing. Any restrictions on the use of such leg irons shall be marked on the leg iron.

7.3 *Processing*—If required, manufacturers shall use a heat treatment to provide the required characteristics of the leg iron. Overheating shall be avoided. Scaling, pitting, and surface decarburization shall be removed on the inside critical section of the leg iron from 2 in. (50.8 mm) below the gaff to 6 in. (152.4 mm) above the gaff (see Fig. 3).

7.4 *Design*—The design of the climber shall be such that the maximum tensile stress at the point where maximum stress occurs when subjected to a fluctuating bending force of 300 lbf (1.34 kN) applied to the center of the stirrup section with sleeve in position shall be as indicated in the table below. The climber shall be held in the climbing position by the gaff and at the top of the climber with the sleeve extended to provide a 16 in. (406.4 mm) length.

Leg Iron	Max Tensile Stress, psi (MPa)
Type A—Steel	27 000 (185)
Type B—Aluminum	9 000 (60)
Type C—Titanium	27 000 (185)

7.5 *Finish*—Leg irons shall be free of surface cracks and seams. Materials used for leg irons shall be finished with a rust-resistant or corrosion-resistant coating as applicable.

7.6 *Testing, Inspection and Marking:*

7.6.1 *Testing:*

7.6.1.1 *Deformation Test*—The purpose for this test is to aid in the elimination of climber failure in the event it is used in an unusual manner such as descending a pole with large steps. The climber shall be held rigidly in the climbing position with the top of the shank parallel to a mounting fixture, the stirrup freely suspended and perpendicular to the fixture. The climber equipped with a pole gaff must also be mounted at the gaff tip in a rigid surface to prevent gaff penetration. Gradually apply a static load of 750 lbf (3.3 kN) at the center of the stirrup and parallel to the fixture and hold for 3 min. Maximum deformation through any part of the climber shall not exceed 0.100 in. (2.5 mm) excluding measurement error after removal of the load. See Fig. 7.

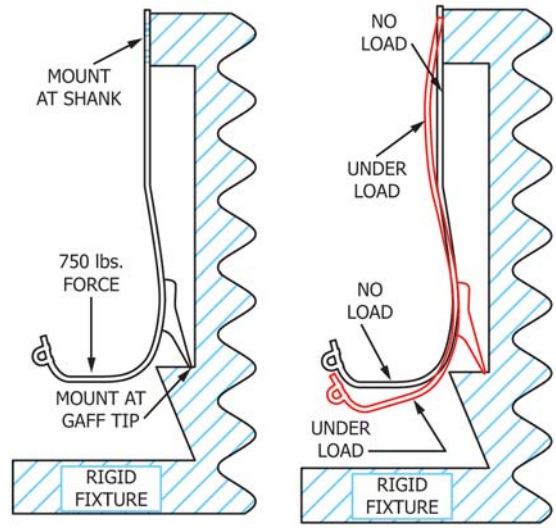

FIG. 7 Deformation Test Fixtures

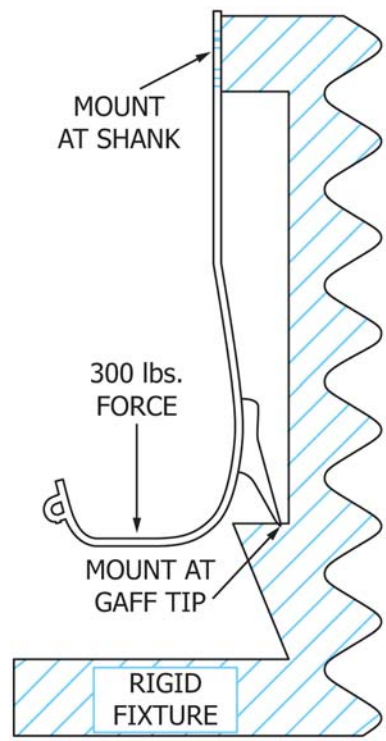

FIG. 8 Fatigue Test Fixture

7.6.1.2 *Fatigue Test*—When tested at room temperature (approx. 68°F (20°C)), the climber as a minimum shall withstand without failure 100 000 cycles of a 300 lb (1334.5 N) load. The load must be applied parallel to the shank at the center of the stirrup section with sleeve in position. The climber equipped with a pole gaff shall be held in the climbing position by the gaff and at the top of the climber with the longest sleeve manufactured extended to provide maximum length. The gaff must be supported by a rigid surface so that the gaff will not penetrate the support. Failure shall be considered as any condition which renders the climber non-useable. See Fig. 8.

7.6.1.3 *Ductility Test—(a)* Leg iron: The leg iron shall withstand without fracture or cracking, a 180 degree bend about a mandrel near the midpoint of the shank area. Mandrel size shall be based upon the minimum allowable bend radius specified for the leg iron shank material, thickness and hardness properties. *(b)* Gaff: The gaff shall withstand, without fracture, a cold bend in a direction away from the leg iron. The center of the bend shall be approximately 5/8 in.(16 mm) from the tip of the gaff. Permanent deflection of the tip of 3/8 in. (9.5 mm) with respect to the straight outer edge of the upper section shall be produced.

7.6.1.4 *Plane Test*—This test may be used to determine that the gaff is correctly shaped and sharpened to properly penetrate the pole. Place the climber on a flat, soft pine or cedar board. Holding it upright with the shank parallel to the board surface,

AVA Documents
Document Sharing Hub

Full document details: ASTM F887-20

but with no pressure on the stirrup, push the climber forward along the board as shown in Fig. 9a. If the gaff is properly shaped and sharpened and if the gaff angle with the wood is sufficient, the gaff point will dig into the wood and begin to hold within a distance of approximately 1 in. (2.54 cm). If the climber gaff slides along the wood without digging in, or merely leaves a mark or groove in the wood as shown in Fig. 9b. the gaff is either not properly sharpened and shaped or the gaff angle is too small. The gaff angle is built into the climber by the manufacturer and should be between 11 and 17 degrees with the climber placed parallel to the surface of the wood.

7.6.1.5 *Pole Cut Out Test*—This test shall be performed on a section of a treated (that is, creosote, penta, etc.) pole in an area that is free from knots and checks. Place the climber on your leg holding the sleeve with your hand. With your leg at an approximate 30° angle to the pole and your foot about 12 in. (30.5 cm) off the ground. Lightly jab the gaff into the pole to a depth of approximately ¼ in. (6.4 mm). Keep enough pressure on the stirrup to keep the gaff in the pole but not so much as to cause the gaff to penetrate any deeper. See Fig. 10a. Push the climber and your hand closer to the pole by moving your knee until the strap loop of the climber sleeve is against the pole. Make certain the strap loop is held against the pole with pressure from your leg. Gradually exert full pressure of your foot straight down on the stirrup without raising your other foot off the floor or ground, so as to maintain balance if the gaff does not hold. See Fig. 10b. The tip of the gaff shall cut into the wood and hold (dig itself in) in a distance of not more than 2 in. (5.1 cm), measured from the point of gaff entry into the pole to the bottom of the cut on the pole surface.

7.6.2 All climbers shall be subjected to careful inspection by the manufacturer. When requested, the manufacturer shall provide certification that the climbers meet all requirements set forth in this standard.

7.6.3 Completed climbers shall be permanently marked by the manufacturer with the manufacturer's name, ASTM F887 standard, size (if fixed size), right or left, and the month and year of manufacture. Right or left markings shall be in a visible area (that is, toe, stirrup) not covered by other equipment.

8. Climber Gaffs

8.1 *Sizes*—Pole gaffs shall measure at least 1⁷⁄₁₆ in. (36.5 mm) on the underside. Tree gaffs shall measure not more than 3½ in. (88.9 mm), nor less than 2¼ in. (57.2 mm) on the underside. Gaff design shall be as shown in Fig. 11.

8.2 *Material*—All gaffs shall be forged of forging-quality steel having the properties listed in Table 2.

8.3 *Finish:*

8.3.1 All fins or burrs shall be removed from the cutting edges of gaff.

8.3.2 All gaffs shall be finished with a rust-resistant coating.

8.4 *Inspection:*

8.4.1 All gaffs shall be subjected to careful inspection by the manufacturer. When requested, the manufacturer shall certify that the gaffs meet all requirements set forth in this standard.

8.4.2 The size and shape of gaffs shall be checked with a gauge available from the same manufacturer.

NOTE 2—Replaceable gaffs, whether pole or tree, fit only the climber iron of the particular manufacturer.

9. Climber Straps

9.1 *Sizes*—Climber straps shall be a minimum of 1 in. (25.4 mm) in width. The length shall be not less than 22 in. (55.9 cm) for the calf strap, or 24 in. (61 cm) for the one-piece ankle strap. Two-piece ankle straps shall be not less than 24 in. (61 cm) in length.

9.2 *Material and Properties:*

9.2.1 Leather used in the manufacture of climber straps shall be top grain cowhide and shall have a breaking strength of not less than 450 lbf/in. (78.9 kN/m) of width with buckle holes. The buckle holding strength of leather shall be not less than 200 lbf (0.89 kN) static load when determined as follows:

9.2.1.1 Punch a hole ³⁄₁₆ in. (4.76 mm) in diameter, centrally located in a 1 in. (25.4 mm) wide piece of strap, 1 in. (25.4 mm) from the end of the test piece. Into this hole, fit the tongue of a 1 in. assembled buckle of the design to be supplied with the climber strap. Apply the load to the buckle and to the free end of the strap. The buckle tongue shall not tear the leather under the specified static load of 200 lbf (0.89 kN).

9.2.2 The leather shall show no cracking on the grain side when bent slowly over a ½ in. (12.7 mm) diameter mandrel, grain side out, through an angle of 180°. The leather shall not show piping or wrinkling of the grain side when bent over a mandrel 1 in. (25.4 mm) in diameter, with the grain side in, through an angle of 180°.

9.2.3 Fabric used in the manufacture of climber straps shall have a breaking strength of not less than 600 lbf/in. (105.1 kN/m) of width with buckle holes. Construction shall be a

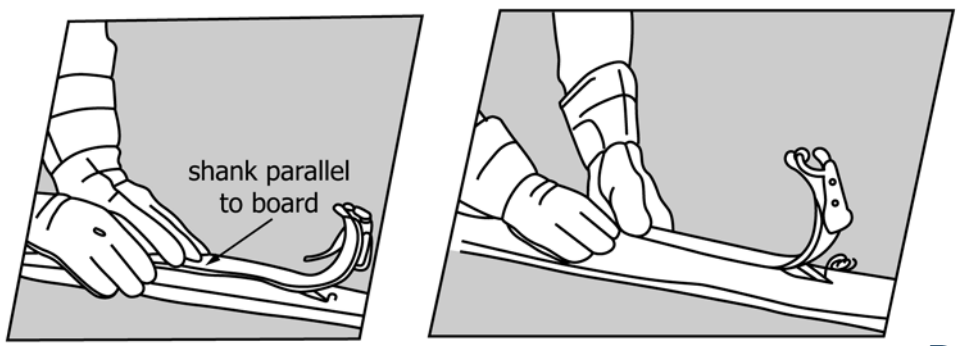

FIG. 9 a & b Plane Test

Documents
Document Sharing Hub

Full document details: ASTM F887-20

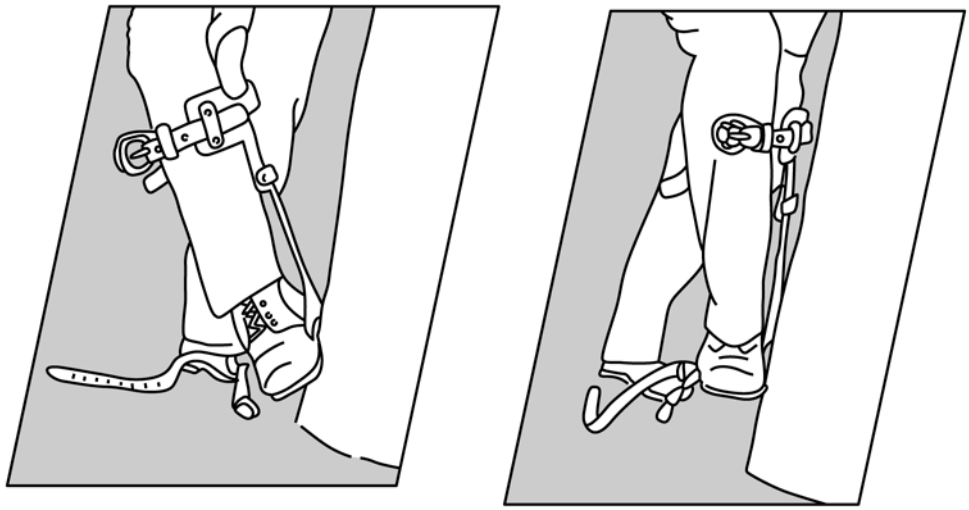

FIG. 10 a & b Pole Cut Out Test

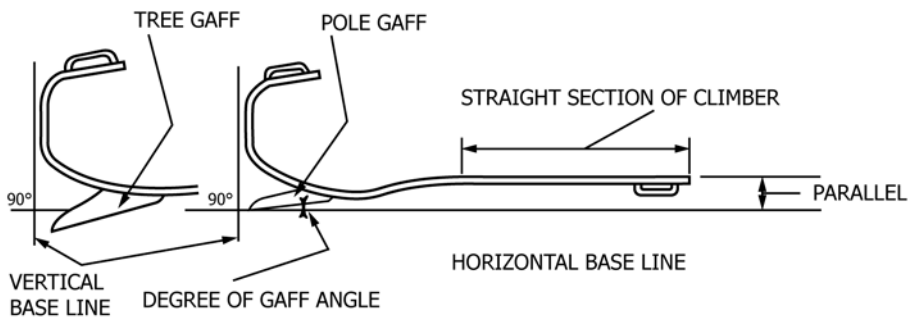

NOTE 1—Degree of angle of the gaff, measured as shown, shall range from 11° to 17°, and the point of the gaff shall be a minimum of ⅜ in. (9.6 mm) above the lowest point of the climber stirrup. Tree gaffs are excluded from this requirement. The inside flat surface of the gaff at the tip shall be finished with a radius of approximately ¼ in. (6.4 mm) in accordance with the gage profile.

FIG. 11 Gaff Design

TABLE 2 Properties of Steel Alloy Acceptable for Gaffs

Elongation in 2 in. (5 cm), min	12 %
Hardness (tip)	45 to 55 HRC [A]
	421 to 546 HB [B]
Yield strength, psi (MPa)	212 000 (1460)

[A] There may be a variation of no more than three points in the Rockwell Hardness readings taken from the tip of the gaff to a point 1¼ in. (3.2 cm) back from the tip on the fixed gaff climber, 1 in. (2.5 cm) from the tip on replaceable gaff climbers.
[B] Brinell hardness number with 3000-kg load, 10-mm ball.

minimum of four plies of thickness of folded nylon, or of woven nylon, or equivalent material, constructed in such a way that no raw edges are exposed. Folded fabric shall be impregnated with neoprene or its equivalent, so that the plies or strands are not readily separable, except by chemical means.

9.2.4 The buckle holding strength of the finished strap shall be not less than 300 lbf (1.34 kN) static load without evidence of failure. Buckle tear shall be in the direction of load application when tested to failure.

9.3 *Hardware*—Buckle frames shall be of welded wire or forged construction. Tongues shall be of an adequate gage wire to meet the strength criteria of 9.2.

9.4 *Design*—Buckle holes in the climber straps shall not exceed 3⁄16 in. (4.76 mm) in diameter. Straps shall be riveted to the buckles by at least two rivets, with the strap keeper centered between the rivets. The completed assembly shall meet the strength requirements of 9.2. Buckle pads or chafes may be added when desired.

10. Climber Pads

10.1 Climber pad assemblies are intended for use with the climber to enhance comfort.

10.2 Hook and Loop Fastener style wrap pads covered under this standard cover the function of both the climber strap and pad.

10.3 *Materials*—Materials used in the manufacture of pads shall be of a type that will result in a finished product capable of meeting the requirements for this section outlined below.

10.3.1 Wrap style pads shall maintain a minimum wrap that shall not release at a force of less than 1000 lbf (4.4 kN) when statically tested.

10.3.2 Wrap style pads must display a minimum wrap location warning. Warning must be permanently attached (label or marking).

10.3.3 Sleeve retaining straps (see Fig. 12a) shall be a minimum of 1 in. (25.4 mm) in width. Leather sleeve retaining straps shall have a breaking strength of not less than 1000 lbf (4.4 kN).

AVA Documents
Document Sharing Hub

Full document details: ASTM F887-20

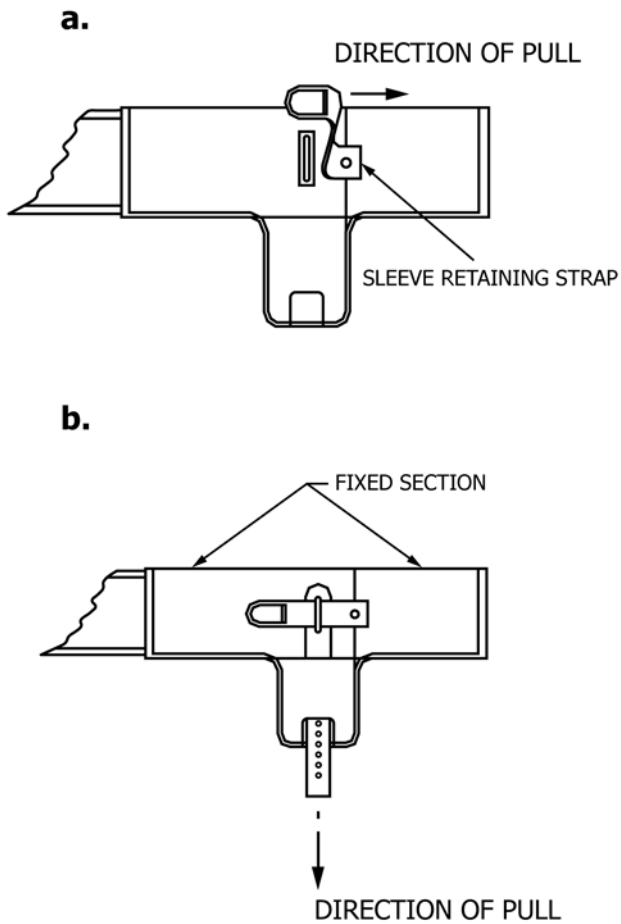

FIG. 12 a & b Sleeve Retaining Straps on Hook and Loop Fastener Wrap Style Pads

(78.9 kN/m) of width. Finished fabric sleeve retaining straps shall have a breaking strength of not less than 600 lbf/in. (105.1 kN/m) of width.

10.3.4 Sleeve retaining straps shall be capable of withstanding a direct pull of 175 lbf (0.78 kN). (See Fig. 12a).

10.3.5 Sleeve retaining straps in place within the climber sleeve shall be capable of withstanding a direct pull of 700 lbf (3.12 kN) (see Fig. 12b).

11. Climber Footplates

11.1 Climber footplate assemblies are intended for use with the climber to enhance comfort.

11.2 *Materials and Properties*—Materials used in the manufacture of footplates shall be of a type that will result in a finished product capable of meeting the requirements for this section outlined below. Material used in the manufacture of footplates must maintain its integrity and resist permanent deformation under normal use conditions for the expected life of the product.

11.3 *Removable*—Footplates if removable shall be equipped with positive locking fasteners to secure the footplates to the climber stirrup.

11.4 *Articulation*—Footplates may swivel slightly on the climber stirrup to allow for ease of movement when working aloft.

11.5 *Shape*—Shape must be smaller than the outsole of a standard climbing boot while providing sufficient support to the outsole.

11.6 *Non–Skid*—Bottom surfaces of the footplate must be as a minimum 90 % covered by a rubber sole or an equivalent non-skid coating.

11.7 Steel footplates are not intended for and may not be used on aluminum climbers unless provisions are implemented to prevent premature wear on the climber.

11.8 Footplates shall be permanently marked by the manufacturer with the manufacturer's name, month and year of manufacture and designated as right and left.

11.9 *Finish*—Footplates shall be free of surface cracks and seams. All steel or ferrous material footplates shall be finished with a rust-resistant coating.

BODY BELTS, POSITIONING DEVICES, AND WOOD POLE FALL RESTRICTION DEVICES (WPFRD)

12. Classification

12.1 Body belts covered under this standard shall be designated as Type A or B, as follows:

12.1.1 *Type A*—Belt with dee-ring piece in fixed position.

12.1.2 *Type B*—Belt with dee-ring piece that has limited freedom of movement.

AVA Documents
Document Sharing Hub

Full document details: ASTM F887-20