This international standard was developed in accordance with internationally recognized principles on standardization established in the Decision on Principles for the Development of International Standards, Guides and Recommendations issued by the World Trade Organization Technical Barriers to Trade (TBT) Committee.

Designation: G75 – 15 (Reapproved 2021)

Standard Test Method for Determination of Slurry Abrasivity (Miller Number) and Slurry Abrasion Response of Materials (SAR Number)[1]

This standard is issued under the fixed designation G75; the number immediately following the designation indicates the year of original adoption or, in the case of revision, the year of last revision. A number in parentheses indicates the year of last reapproval. A superscript epsilon (ε) indicates an editorial change since the last revision or reapproval.

1. Scope

1.1 This test method covers a single laboratory procedure that can be used to develop data from which either the relative abrasivity of any slurry (Miller Number) or the response of different materials to the abrasivity of different slurries (SAR Number), can be determined.

1.2 The test data obtained by this procedure is used to calculate either a number related to the rate of mass loss of duplicate standard-shaped 27 % chromium iron wear blocks when run for a period of time in the slurry of interest (Miller Number), or to calculate a number related to the rate of mass loss (converted to volume loss) of duplicate standard-shaped wear specimens of any material of interest when run for a period of time in any slurry of interest (SAR Number).

1.3 The requirement for a finished flat wearing surface on the test specimen for a SAR Number test may preclude application of the procedure where thin (0.051 mm to 0.127 mm), hard, wear-resistant coatings will not allow for surface finishing. The 6 h total duration of the SAR Number Test may not allow establishment of a consistent rate-of-mass-loss of the unfinished surface.

1.4 *This standard does not purport to address all of the safety concerns, if any, associated with its use. It is the responsibility of the user of this standard to establish appropriate safety, health, and environmental practices and determine the applicability of regulatory limitations prior to use.*

1.5 *This international standard was developed in accordance with internationally recognized principles on standardization established in the Decision on Principles for the Development of International Standards, Guides and Recommendations issued by the World Trade Organization Technical Barriers to Trade (TBT) Committee.*

2. Referenced Documents

2.1 *ASTM Standard:*[2]

G40 Terminology Relating to Wear and Erosion

2.2 *Military Standard:*

MIL-R-6855C Rubber, Synthetic, Sheets, Strips, Molded or Extruded Shapes[3]

3. Terminology

3.1 *Definitions:*

3.1.1 Definitions used in this test method are in accordance with Terminology G40 as follows:

3.1.2 *abrasive wear*—wear due to hard particles or hard protuberances forced against and moving along a solid surface.

3.1.3 *corrosive wear*—wear in which chemical or electrochemical reaction with the environment is significant.

3.1.4 *abrasion-corrosion*—a synergistic process involving both abrasive wear and corrosion in which each of these processes is affected by the simultaneous action of the other and, in many cases is thereby accelerated.

3.1.5 *cumulative erosion-time curve*—a plot of cumulative erosion versus cumulative exposure duration, usually determined by periodic interruption of the test and weighing of the specimen. This is the primary record of an erosion test. Most other characteristics, such as the incubation period, maximum erosion rate, terminal erosion rate, and erosion rate-time curve, are derived from it.

3.1.6 *erosion*—progressive loss of original material from a solid surface due to mechanical interaction between that surface and a fluid, a multi-component fluid, or impinging liquid or solid particles.

3.1.7 *erosion-corrosion*—a conjoint action involving corrosion and erosion in the presence of a corrosive substance.

3.1.8 *instantaneous erosion rate*—the slope of a tangent to the cumulative erosion-time curve at a specified point on that curve.

[1] This test method is under the jurisdiction of ASTM Committee G02 on Wear and Erosion and is the direct responsibility of Subcommittee G02.30 on Abrasive Wear.

Current edition approved Nov. 1, 2021. Published December 2021. Originally approved in 1982. Last previous edition approved in 2015 as G75–15. DOI: 10.1520/G0075-15R21.

[2] For referenced ASTM standards, visit the ASTM website, www.astm.org, or contact ASTM Customer Service at service@astm.org. For *Annual Book of ASTM Standards* volume information, refer to the standard's Document Summary page on the ASTM website.

[3] Available from DLA Document Services, Building 4/D, 700 Robbins Ave., Philadelphia, PA 19111-5094, http://quicksearch.dla.mil.

Copyright © ASTM International, 100 Barr Harbor Drive, PO Box C700, West Conshohocken, PA 19428-2959. United States

Copyright by ASTM Int'l (all rights reserved); Wed Dec 08 07:24:39 GMT 2021
Downloaded/printed by
University of Toronto (University of Toronto) pursuant to License Agreement. No further reproductions authorized.
Full document details: ASTM G75-15(2021)
Documents
Document Sharing Hub

3.2 *Definitions of Terms Specific to This Standard:*

3.2.1 *mass concentration*—the mass of solid particles per unit mass of mixture, expressed in percent.

3.2.2 *Miller Number*—a measure of slurry abrasivity as related to the instantaneous rate of mass loss of a standard metal wear block at a specific time on the cumulative abrasion-corrosion time curve.

3.2.3 *SAR Number*—a measure of the relative abrasion response of any material in any slurry, as related to the instantaneous rate of mass-loss of a specimen at a specific time on the cumulative abrasion-corrosion time curve, converted to volume or thickness loss rate.

3.2.4 *slurry*—a mixture of solid particles in liquid, of such a consistency as to be capable of being pumped like a liquid.

3.2.5 *slurry abrasivity*—the relative tendency of a particular moving slurry to produce abrasive and corrosive wear compared with other slurries.

4. Summary of Test Method

4.1 The relative effect of slurry abrasivity in both the Miller Number and the SAR Number is determined by using the measured mass loss of a standard-shaped 27 % chrome iron metal wear block (Miller Number); or a metal, ceramic, composite, plastic, or elastomer wear specimen (SAR Number), driven in a reciprocating motion by a rotating crank, riding in the bottom of a trough containing the slurry. A direct load is applied to the wear block or wear specimen. For each test, the bottom of the trough is equipped with a new piece of a sheet of Neoprene[4] to act as a lap. The interior of the trough has a flat-bottomed or truncated "V" shape trough that confines the slurry particles to the path taken by the wear block or wear specimen. At one end of each stroke, the wear block wear specimen is lifted off the lap by a cam action for sufficient time to allow fresh slurry material to flow under the wear block or wear specimen. The wear block/wear specimen holder is made of plastic, as are the troughs, so that electrolysis inherent in certain slurries is minimized.

4.2 The test consists of measuring the mass loss of a part that is referred to either a wear block or wear specimen to be consistent with Section G34 of Form and Style for ASTM Standards. Standard wear blocks of 27 % chrome iron are used for the Miller Number test where the slurry is the specimen and the results are the relative abrasivity of the slurry. Wear specimens are used in the SAR Number test where the test results are the relative wear rate of different wear specimens in a given slurry.

4.3 This test method was originally developed as a 16 h test to be run in 4 h increments. However, experience has shown that the extended test length is unnecessary and it has been established that a 6 h test, run in 2 h increments, gives essentially equivalent results. The current revision is based on the shorter test procedure.

[4] Neoprene is a registered trademark of E. I. du Pont de Nemours and Co., Wilmington, DE 19898.

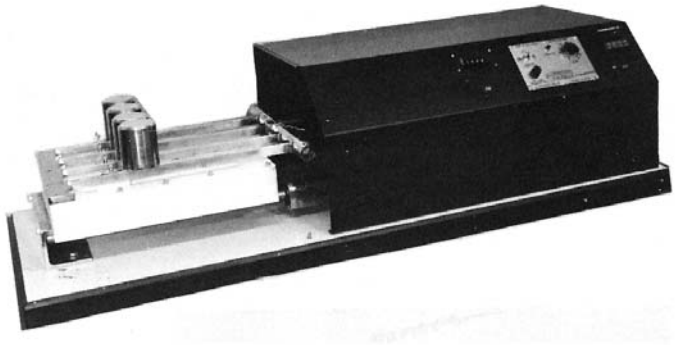

FIG. 1 Miller Number Machine

5. Significance and Use

5.1 The Miller Number[5] is an index of the relative abrasivity of slurries. Its primary purpose is to rank the abrasivity of slurries in terms of the wear of a standard reference material. The wear damage on the standard wear block is worse as the Miller Number gets higher.

5.2 The SAR Number is an index of the relative abrasion response of materials as tested in any particular slurry of interest. The SAR Number is a generalized form of the Miller Number applicable to materials other than the reference material used for the Miller Number determination. A major purpose is to rank construction materials for use in a system for pumping and fluid handling equipment for a particular slurry. It can also be used to rank the abrasivity of various slurries against any selected construction material other than the reference material specified for a Miller Number determination. The slurry damage on the specimen of material being tested is worse as the SAR Number gets higher.

5.3 Experience has shown that slurries with a Miller Number or a SAR Number of approximately 50 or lower can be pumped with minor abrasive damage to the system. Above a number of 50, precautions must be observed and greater damage from abrasion is to be expected. Accordingly, the Miller Number and the SAR Number provide information about the slurry or the material that may be useful in the selection of pumps and other equipment and to predict the life expectancy of liquid-end parts of the pumps involved.

5.4 The SAR Number can be used to determine the most suitable materials for certain slurry systems.

6. Apparatus

6.1 Figs. 1 and 2 show the arrangement of a typical test machine.[6]

[5] "The Miller Number—A New Slurry Rating Index," *AIME Paper 73-B-300*, SME Meeting, Pittsburgh, PA, 1973.

[6] The sole source of supply of the machine and parts, including laps and wear blocks, known to the committee at this time is Falex Friction and Wear Test Machines, 1020 Airport Dr., Sugar Grove, IL 60554. If you are aware of alternate suppliers, please provide this information to ASTM Headquarters. Your comments will receive careful attention at a meeting of the responsible technical committee,[1] which you may attend.

Copyright by ASTM Int'l (all rights reserved); Wed Dec 08 07:24:39 GMT 2021
Downloaded/printed by
University of Toronto (University of Toronto) pursuant to License Agreement. No further reproductions authorized.
Full document details: ASTM G75-15(2021)
AVA Documents
Document Sharing Hub

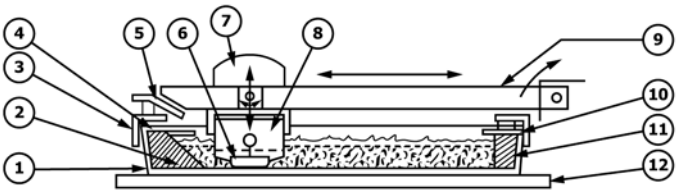

FIG. 2 Miller Number Machine Slurry Trough Cross-Section

6.2 *Description of Machine:*

6.2.1 The drive mechanism provides a horizontal reciprocating harmonic motion to the wear block/wear specimen arm of 203.2 mm travel. The arm is freely pivoted to a crosshead at a point that results in the arm being parallel (level) to the crosshead ways in the operating position. The crosshead is connected to a crank, rotating at 48 r/min, by an appropriate connecting rod.

6.2.2 The apparatus includes two operating arms for an averaging effect and as a check on the accuracy of measurements. It is possible to combine four arms on one machine so that two simultaneous tests can be run.

6.2.3 Each arm is loaded with a mass so that the total downward force on the face of the wear block or wear specimen is 22.24 N (5 lb).

6.2.4 A cam is provided on the trough cover plate to momentarily lift each arm at the end of a stroke to a distance of 1 mm off the rubber lap.

6.2.5 Troughs about 50 mm wide by 381 mm long by 50 mm high are used. A separate trough is required for each arm.

6.2.6 Troughs as described above are machined into an elastomer material to form a slurry trough component that is used to hold the rubber lap in place between the bottom of the trough and the base plate and to provide a V-shaped open bottom trough for the length of the wear block or wear specimen travel. There is a slope of 45° at the cam end of one stroke to generate a surge or back flow of fresh slurry under the lifted wear block or wear specimen.

6.2.7 A wear block/wear specimen holder is machined from plastic to about 50 mm by 50 mm by 12.7 mm with a height-adjusting system and a slot to hold the wear block or wear specimen and a nonmetallic clamp-bolt to hold the wear block or wear specimen in alignment. See Fig. 3.

6.2.8 The wear block/wear specimen is mounted on the arm in such a manner as to allow adjustment of the wear block or wear specimen vertically and to establish parallelism with the flat rubber lap.

6.2.9 Except for the wear block or wear specimen and stroke length, dimensional tolerances of the machined parts are not critical and the tolerances can be in the order of 0.5 % total.

7. Reagents and Materials

7.1 The reference material[7] for the Miller Number is a proprietary alloy[8] of the type commonly used in pipeline pump applications. The nominal composition of this chromium-iron wear block reference material is: Carbon-2.5 %, Manganese-1.0 %, Silicone-0.6 %, Nickel-0.25 %, Chromium-28 %, Molybdenum-0.3 %, Vanadium-0.8 %, Iron-balance.

7.1.1 The material is obtainable in the form of a centrifugally cast cylinder, approximately 183 mm outside diameter by 152 mm inside diameter by 305 mm long.

7.1.2 In this case the following heat-treat procedure and specimen preparation procedure should be followed:

7.1.2.1 Anneal 24 h, turn and bore, approximately 179 mm outside diameter by 164 mm inside diameter.

7.1.2.2 Heat to 1010 °C (1850 °F), 60 min.

7.1.2.3 Air cool, hardness 59 to 60 HRC.

7.1.2.4 Grind to approximately 178 mm outside diameter by 165 mm inside diameter.

7.2 Using an abrasive wheel or wire EDM, cut 25.4 mm lengths or "rings" from the cylinder. Cut the rings into 15 mm wide segments. Grind the segments to the shape shown in Fig. 3.

7.3 As a final finish on the wearing surface, wet grind on 320 grit silicon carbide paper to a 0.8 micron surface finish. The wear specimens can be ground and resurfaced with 320 grit silicon carbide paper multiply times. Reconditioning is limited to homogeneous materials and minimum thickness that can be retained in wear specimen holder. It is important that a radius leading edge be maintained.

7.4 The lap is a 3.18 mm thick sheet, 57.2 mm by 362 mm long of molded neoprene rubber specified as a Modified MIL-R-6855C, Class 2, Grade 80. The Durometer specification of the Neoprene has been reduced from 80 ± 5 to 80 ± 3. The purpose of the tighter specification is to reduce variability observed in the initial interlaboratory test.

7.5 The SAR Number wear specimen of any selected candidate material is machined and ground to the shape shown in Fig. 3.

7.6 *Isopropyl Alcohol.*

8. Preparation of Apparatus

8.1 The following detailed description of the setup of the apparatus for the start of the test is appropriate for the commercially available unit. For other apparatus the procedure should be followed as closely as possible, particularly to ensure the alignment required.

8.2 *Wear Block or Wear Specimen Preparation:*

8.2.1 Prepare duplicate wear block or wear specimens for each test. The wear blocks, or wear specimens polished or

[7] Specimen available from Falex Friction and Wear Test Machines, 1020 Airport Dr., Sugar Grove, IL 60554. Falex is the sole source of supply known to the committee at this time. If you aware of alternative suppliers, please provide this information to ASTM Headquarters. Your comments will receive careful consideration at a meeting of the responsible technical committee,[1] which you may attend.

[8] Proprietary of Woolley Tool and Manufacturing Co., P.O. Box 3505, Odessa, TX 79760.

Copyright by ASTM Int'l (all rights reserved); Wed Dec 08 07:24:39 GMT 2021
Downloaded/printed by
University of Toronto (University of Toronto) pursuant to License Agreement. No further reproductions authorized.
Full document details: ASTM G75-15(2021)
AVA Documents
Document Sharing Hub

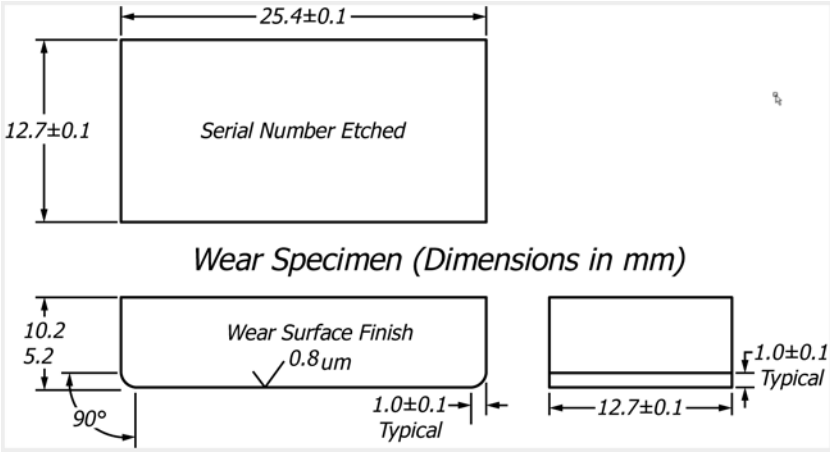

FIG. 3 Wear Block or Wear Specimen Dimensions

ground flat on the wearing surface, should be permanently marked with an identification mark or number on one side.

8.2.2 The wear block/wear specimen holders are designed to be adjustable so as to accept a wear block or wear specimen of any thickness up to about 10 mm; therefore, it is possible to rework the wear blocks or wear specimens and realize many more runs, (except, of course, for coated or plated specimens).

8.2.3 The wear blocks or metallic wear specimens are demagnetized initially so as to minimize the magnetic effects in precision weighing and possible effects in a magnetic slurry. Place the demagnetizer pole tip against the wear block or wear specimen. Move the tip over the entire wear block or wear specimen for a few seconds. Then move the demagnetizer slowly away and disconnect it from the power. Slow removal of the demagnetizer is particularly important.

8.2.4 Scrub the wear blocks or wear specimens with detergent and water, rinse and dry with a clean lint-free paper towel. Immerse in electronic cleaner containing isopropyl alcohol for 5 min. Dry with a clean lint-free paper towel and then place under a heat lamp or blow dry for about 5 min. Immediately after cooling, weigh each wear block or wear specimen to 0.1 mg and record the data.

8.3 *Preparation of Duplicate Troughs for Each Test:*

8.3.1 Temporarily set the troughs component upside-down.

8.3.2 Place new neoprene laps in the recessed bottom of the trough components, after removing any protective coating prior to installation.

8.3.3 Place the base plate in position and invert the base plate and trough component carefully so as not to get the Neoprene laps out of position.

8.3.4 Place the trough cover plate on top of the trough component. Insert bolts and tighten all bolts adequately to ensure that the Neoprene laps form a seal at the base of the trough.

8.3.5 Mount the trough assembly on the crosshead guide rods by installing two bolts at the front stop and two bolts at the back of the trough assembly to hold it in alignment with the wear block/wear specimen arms.

8.4 *Installation of Wear Blocks or Wear Specimens*—Duplicate wear blocks or wear specimens are installed in two selected wear block/wear specimen holders. Place the arms on the rack as shown in Fig. 4. Place the wear block or wear specimen in the jaws of the wear block/wear specimen holder (see Fig. 5) with wear surface up and with identification mark facing the operator. Lightly tighten the clamp bolt until the wear block or wear specimen is snug. Wear block or wear specimen alignment can be obtained by the use of the alignment jig furnished with the machine (Fig. 6). Push the wear block or wear specimen with the setscrew on the wear block/wear specimen arm so that the block-face is snug against the alignment jig face. Tighten the clamp bolt.

8.5 *Final Wear Block or Wear Specimen Alignment Check*—Slightly wet the surface of the wear block or wear specimen with an inked stamp pad and lower it onto a strip of white paper placed in the bottom of the trough (a simple check for wear block or wear specimen alignment). A full "imprint" of wetness should show on the paper.

8.6 *Drying Solids*—Dry, unwashed solids should be used to make the slurry. The moisture of the solids must be brought to equilibrium with the atmosphere by exposing a thin layer of the sample to air at room temperature for 24 h. Do not allow the temperature of the sample to exceed 10 °C over room temperature. Sometimes a ready-mixed slurry may be furnished that will be run as-received and so noted.

8.7 *Filling Slurry Troughs:*

8.7.1 *Miller Number*—Fill troughs with the slurry to be tested. Each trough holds approximately 300 g of slurry and care should be taken to see that the proper concentration of slurry is maintained in transferring the mixed slurry from the container to the troughs. It is usually more desirable to weigh out the dry material and the liquid and mix them directly in the troughs to the 50 % by mass of dry solids required for the Miller Number. The usual mixture is 150 g of solids and 150 g of distilled water (or liquid specified, corrected for specific gravity). With some low-density solids, the proportion may be reduced to 100 g of solids and 100 g of liquid to prevent splashing.

8.7.2 For the SAR Number, the solids concentration and liquid are usually specified by the user or the already mixed

AVA Documents
Document Sharing Hub

Copyright by ASTM Int'l (all rights reserved); Wed Dec 08 07:24:39 GMT 2021
Downloaded/printed by
University of Toronto (University of Toronto) pursuant to License Agreement. No further reproductions authorized.
Full document details: ASTM G75-15(2021)

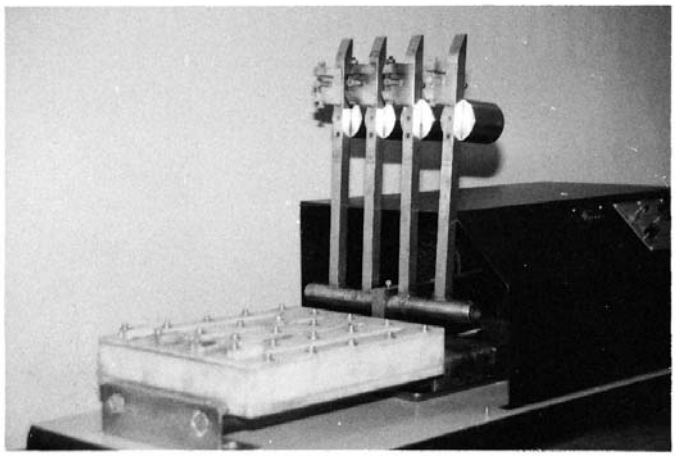

FIG. 4 Arms in Racked Position

slurry may be furnished. If a dry material sample is supplied, and no mixing instructions are furnished, distilled water should be used to mix a 50 % concentration and so noted in the report.

9. Procedure

9.1 Start the test with the mounted wear blocks or wear specimens placed in the troughs. Make the first run for 2 h of uninterrupted testing, at which time the machine is stopped. Lift the arms from the troughs and tilt back onto the rack. Remove the wear blocks or wear specimens, scrub in detergent and water, rinse and dry with a clean lint-free paper towel. Immerse in electronic cleaner containing isopropyl alcohol for 5 min; dry with a clean lint-free paper towel and then place under a heat lamp for about 5 min. Immediately after cooling, weigh each wear block or wear specimen to 0.1 mg and record the data.

9.2 Replace the wear blocks or wear specimens in the same wear block/wear specimen holder, but with the identification number now facing away from the operator. (Alternating the orientation of the wear blocks or wear specimens in this manner for each of the three 2 h runs provides an averaging of the wear pattern.) Carry out the alignment procedure in accordance with 8.4.

9.3 Using a suitable paddle, remix any settled slurry in each trough before each 2 h run.

9.4 Three 2 h runs duplicated as in 9.1 – 9.3 constitute a complete test. Record the wear block or wear specimen mass loss for each run. The calculated rate of mass loss is an adequate measure of the effect of life of pump parts and pipeline. Accordingly, the Miller Number and the SAR Number are based on this rate of mass loss.

9.5 Record the thickness loss in mm to the nearest 0.01 mm.

9.5.1 In most cases, there is only a trace (<0.05 mm) of lap wear, but a few slurries may cause more than usual wear.

10. Calculation of Results

10.1 *Miller Number (Also proceed through 10.3 for SAR Number)*—For test data, refer to X1.2 and Fig. X1.1 only.

10.1.1 The wear block or wear specimen mass loss, is recorded as the average of two runs in a typical slurry. For example, see Table 1. The basic mathematical equation for a curve-fit of the data is:

$$M, \text{ mg} = At^B \tag{1}$$

where:

M = cumulative mass loss,
A = first curve fit coefficient,
B = second curve fit coefficient,
t = time, h, and
MN = Miller number.

10.1.2 Using the least squares method, the values of A and B are calculated for the curve closely matching the test data curve. In this example, the following values are determined: $A = 4.732$ and $B = 0.906$. The Miller Number and the SAR Number are described as indexes related to the rate at which the wear block or specimen loses mass at 2 h into the test, which can be calculated by using the first derivative of (Eq 1) at 2 h and is designated as M. This becomes the slope of the line tangent to the curve at 2 h as seen in (Eq 2):

$$M, \text{ mg/h} = A \times B \times t^{(B-1)} \tag{2}$$

For the example: $M = 4.732 \times 0.906 \times 2^{(0.906-1)} = 4.018$ mg/h.

10.1.3 It is desirable to have a meaningful whole number for the expression of the abrasion-corrosion effects where the Miller Number results will be approximately 1 for sulfur and 1000 for 220 mesh Corundum, and this is accomplished by the use of a scaling factor (C), determined to be 18.18 h/mg. Eq 3 for Miller Number can therefore be written as:

$$MN = (18.18 \text{ h/mg})\,(\text{mass loss rate, mg/h}) \tag{3}$$

For the example: $MN = 18.18 \times 4.018 = 73$ (rounded to nearest integer).

where:

MN = Miller Number.

10.2 Any acceptable curve fit method may be used to compute the A and B results from the mass loss data.

10.3 *SAR Number*—The SAR Number is obtained simply by multiplying the Miller Number value by the ratio of the standard wear block material's specific gravity (7.58) to the specific gravity of the wear specimen material. For example, if the same mass losses were observed in a test run with specimens of 304L stainless steel which has a specific gravity of 8.04, the SAR Number would be:

$$\text{SAR Number} = \text{Miller Number} \times (7.58/\text{SG specimen}) \tag{4}$$

For the example: SAR Number = 73 × (7.58/8.02) = 69 (rounded to nearest integer).

11. Report

11.1 A sample laboratory test data recording form is shown in Fig. 7.

11.2 An acceptable report in the form of a computer printout is illustrated in X1.1 and X1.2.

Copyright by ASTM Int'l (all rights reserved); Wed Dec 08 07:24:39 GMT 2021
Downloaded/printed by
University of Toronto (University of Toronto) pursuant to License Agreement. No further reproductions authorized.
Full document details: ASTM G75-15(2021)
AVA Documents
Document Sharing Hub

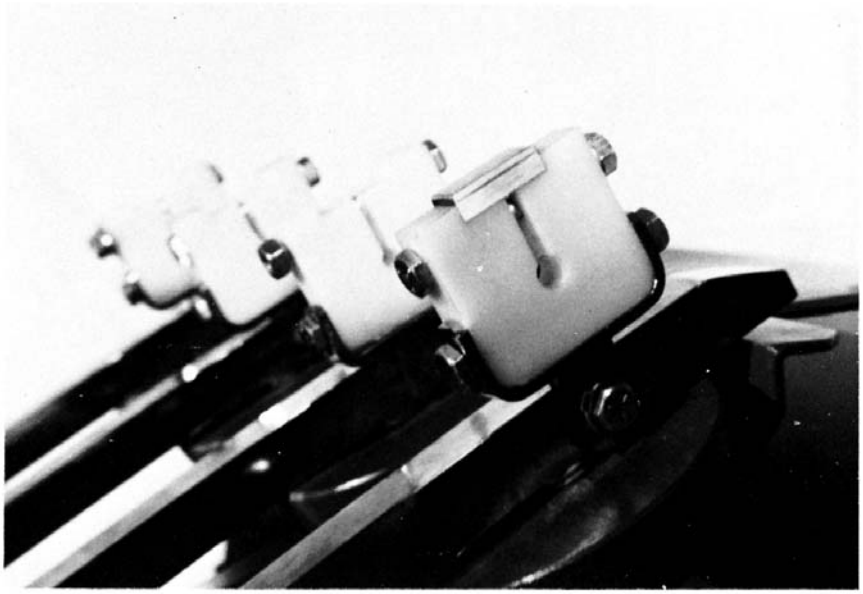

FIG. 5 Wear Block/Wear Specimen Holder

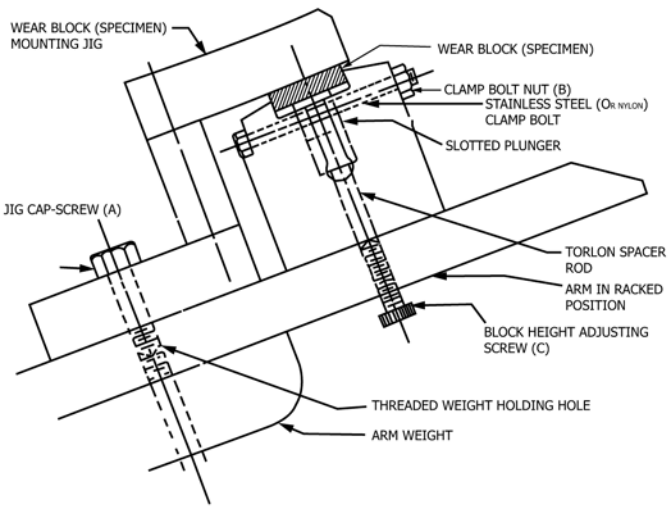

FIG. 6 Wear Block/Wear Specimen Alignment Jig

TABLE 1 Test Data

Wear Specimen	142		143	
	Mass, g	Cumulative Loss, mg	Mass, g	Cumulative Loss, mg
Initial	16.2810	0.0	16.2670	0.0
After 2 h	16.2723	8.7	16.2580	9.0
After 4 h	16.2668	14.2	16.2500	17.0
After 6 h	16.2594	21.7	16.2406	26.4

12. Precision and Bias

12.1 The range of Miller Numbers for generic materials encountered in practice is quite wide (see Table 2). The differences are the result of different crystalline structures (hardness), particle size, particle shape, tramp materials contained in the solids and corrosive properties of the slurries.

12.2 *Precision:*

12.2.1 The provisional precision of this test method for measuring the Miller Number and SAR Number has been demonstrated in an interlaboratory test as shown in Tables 3 and 4. The results are provisional because the tests do not represent the current criteria for precision based on G117 because of the number of tests conducted. Results obtained show:

12.2.1.1 *Miller Number:*

(1) The average test value for mass loss data was 103.97 mg

(a) with a 95 % repeatability limit (within-lab) of 20.66 mg

(b) and a 95 % reproducibility (between-labs) of 21.01 mg.

(2) The average test value for the Miller Number was 149

(a) with a 95 % repeatability limit (within-lab) of 29.73

(b) and a 95 % reproducibility (between-labs) of 32.09.

12.2.1.2 *SAR Number:*

(1) The average test value for mass loss data was 104.82 mg

(a) with a 95 % repeatability limit (within-lab) of 12.97 mg

(b) and a 95 % reproducibility (between-labs) of 28.78 mg.

(2) The average test value for the SAR Number was 153.00

(a) with a 95 % repeatability limit (within-lab) of 19.28

(b) and a 95 % reproducibility (between-labs) of 52.21.

12.2.2 The interlaboratory data are described in detail in X1.5 through X1.10.

12.3 *Bias*—The procedure for the test method of measuring Miller Number or SAR Number has no bias because the value of the abrasivity can be defined only in terms of this test method.

AVA Documents
Document Sharing Hub

Copyright by ASTM Int'l (all rights reserved); Wed Dec 08 07:24:39 GMT 2021
Downloaded/printed by
University of Toronto (University of Toronto) pursuant to License Agreement. No further reproductions authorized.
Full document details: ASTM G75-15(2021)

Test								
Number	:							
Type	:							
Date	:							
Project								
Description	:							
Slurry								
Description	:							
Concentration	:							
Temperature	:							
Wear Specimen								
Description	:							
Specific Gravity	:							
Hardness	:							
Lap Material								
Description	:							
Hardness - Durometer	:							
Wear - mm	:							
Wear Specimen		**Specimen 1**			**Specimen 2**			Cumm Loss
		pH	Mass g	Loss mg	pH	Mass g	Loss mg	Ave mg	*Best Fit mg
Initial	:							0.0	0.0
After 2 Hours	:							0.0	0.0
After 4 Hours	:							0.0	0.0
After 6 Hours	:							0.0	0.0
Total	:								

FIG. 7 Test Data Recording Form

TABLE 2 Examples of Miller Numbers for Some Slurries

NOTE 1—Generic minerals from different sources differ greatly in abrasivity.

Material	Miller Numbers
Alundum 400 mesh	241
Alundum 200 mesh	1058
Ash (fly)	83, 14
Bauxite	9, 22, 33, 45, 50, 76, 134
Clay	34, 36
Coal	6, 7, 9, 10, 12, 21, 28, 47, 57
Copper concentration	19, 37, 58, 68, 111, 128
Gypsum	41
Iron Ore	28, 37, 64, 79, 122, 157, 234
Kaolin	7, 7, 30
Lignite	14
Limestone	22, 27, 29, 30, 33, 39, 43, 46
Limonite	113
Magnetite	64, 67, 71, 134
Mud, drilling	10
Phosphate	68, 74, 84, 134
Potash	0, 10, 11
Pyrite	194
Sand/sand fill	51, 59, 75, 85, 93, 116, 138, 149, 246
Shale	53, 59
Sewage (raw)	25
Sulfur	1
Tailings (all types)	24, 61, 76, 91, 159, 217, 480, 644

13. Keywords

13.1 Miller Number; SAR Number; slurry abrasivity; slurry material wear

Documents
Document Sharing Hub
Copyright by ASTM Int'l (all rights reserved); Wed Dec 08 07:24:39 GMT 2021
Downloaded/printed by
University of Toronto (University of Toronto) pursuant to License Agreement. No further reproductions authorized.
Full document details: ASTM G75-15(2021)